RS 08780A/B-50

U.S. MARINE CORPS TECHNICAL MANUAL

DEPOT MAINTENANCE MANUAL

LOGISTICS VEHICLE SYSTEM (LVS)

POWER UNIT, FRONT, 12-1/2 TON, 4 X 4
MK 48, MOD 0
(NSN 2320-01-177-5167)

POWER UNIT, FRONT 12-1/2 TON, 4 X 4
MK48A1, MOD 0
(NSN 2320-01-417-3180)

THIS REPRINT INCLUDES CHANGE 1.

THIS PUBLICATION IS REQUIRED FOR OFFICIAL USE OR FOR ADMINISTRATIVE OR OPERATIONAL PURPOSES. DISTRIBUTION IS LIMITED TO U.S. GOVERNMENT AGENCIES ONLY. OTHER REQUESTS FOR THIS DOCUMENT MUST BE REFFERRED TO: COMMANDANT OF THE MARINE CORPS (ARD), WASHINGTON, D.C., 20380-0001.

DESTRUCTION NOTICE:
FOR UNCLASSIFIED, LIMITED DOCUMENTS, DESTROY BY ANY METHOD THAT WILL PREVENT DISCLOSURE OF CONTENTS OR RECONSTRUCTION OF THE DOCUMENTS.

FOR OFFICIAL USE ONLY

DECEMBER 1996
PCN 170 070755 00

DEPARTMENT OF THE NAVY
Headquarters, U.S. Marine Corps
Washington, D.C. 20380-0001

28 May 1999

1. This Rebuild Standard (RS), authenticated for Marine Corps use and effective upon receipt, provides rebuild standard information and depot maintenance repair instructions for the Logistics Vehicle System (LVS), Power Unit, Front, 12-1/2 Ton, 4X4, MOD 0, MK48 and MK48A1.

2. This manual is a reprint of the basic manual and includes change 1. This manual supersedes RS 08780A of December 1996 and all changes.

3. Submit notice of discrepancies or suggested changes on NAVMC 10772 to: Commander, Marine Corps Logistics Bases, Attn: Code 826, 814 Radford Blvd., Albany, GA 31704-1128. In addition, forward an information copy to the Project Officer at the following address: Commander, MARCORSYSCOM, Attn: CSLE-MT, 2033 Barnett Ave., Suite 315, Quantico, VA 22134-5010.

BY DIRECTION OF THE COMMANDANT OF THE MARINE CORPS

OFFICIAL:

G. N. GEORGEADIS
Director, Program Support
Marine Corps Systems Command

DISTRIBUTION: PCN 170 070755 00

TABLE OF CONTENTS

Section/Paragraph — Page

CHAPTER 1 INTRODUCTION

I. SCOPE, PURPOSE, AND OVERHAUL REQUIREMENTS

1-1 Scope 1-1
1-2 Purpose 1-1
1-3 Quality Assurance Provisions 1-1
1-4 Overhaul Requirements 1-1

II. DESCRIPTION 1-3

1-5 Functional Description 1-3
1-6 Data Plates and Placards-Stamping, Location, and Description 1-4
1-7 Technical Description 1-5

III. GENERAL CRITERIA 1-12

1-8 General Requirements 1-12
1-9 Final Inspection 1-12
1-10 Modifications 1-12
1-11 Publications 1-12
1-12 Special Tools, Jigs, and Fixtures 1-12
1-13 Required Test Equipment 1-12
1-14 Estimated Man-Hour Requirements 1-12

IV. MAINTENANCE FACILITY REQUIREMENTS 1-14

1-15 General Requirements 1-14
1-16 Building and Hardstand Facilities 1-14
1-17 Inspection Facilities 1-14
1-18 Support Shop Systems 1-14
1-19 Safety Precautions 1-15
1-20 Environmental Precautions 1-15

CHAPTER 2 OVERHAUL PROCEDURES

I. GENERAL OVERHAUL REQUIREMENTS 2-1

2-1 General Information 2-1

II. REMOVAL OF MAJOR COMPONENTS 2-17

2-2 Removal of Major Components 2-17
2-3 Battery Cables, Batteries, and Battery Box 2-17
2-3.1 Battery Cables, Batteries, and Battery Box (LVSA1 Series Vehicles Only) 2-18.1
2-3.2 Slave Connector (LVSA1 Series Vehicles Only) 2-19
2-4 Wheel and Tire Assembly 2-19
2-5 Grille, Skid Plate, and Skid Plate Frame 2-21
2-6 Exterior Access Panels 2-26
2-7 Beacon Light and Mounting Bracket 2-26
2-8 Exhaust Pipe and Muffler Assembly 2-26
2-9 Work Lights 2-29
2-10 Fuel Filters, Hand Priming Pump, and Mounting Bracket 2-29

TABLE OF CONTENTS -CONT

Section/Paragraph		Page
2-11	Spare Tire and Wheel Assembly and Lifting Bracket	2-37
2-12	Spare Tire Hoist Winch	2-37
2-13	Spare Tire Hoist Winch Cable	2-37
2-14	Air Lines and Fittings	2-41
2-15	Spring Brake Valve	2-43
2-16	Quick Release Valve	2-45
2-16.1	Quick Release Valve (LVSA1 Series Vehicles Only)	2-44
2-17	Engine Cover, Radiator Grate, and Radiator Grille	2-45
2-18	Hydraulic Hoses and Fittings	2-49
2-19	Hydraulic Oil Cooler	2-54
2-20	Transmission Oil Cooler	2-54
2-21	Cooling System Hoses and Tubes	2-56
2-22	Radiator and Fan Shroud	2-61
2-23	Fuel Lines, Vent Lines, Check Valves, and Fittings	2-64
2-24	Fuel Tanks	2-64
2-25	Motion Control Valve	2-67
2-26	Fan Mount/Radiator Support	2-69
2-27	Fan and Fan Motor	2-72
2-28	Quick Disconnect Fitting	2-72
2-29	Main Air Reservoirs	2-76
2-30	Grab Handle - Left Fender	2-76
2-31	Air Cleaner Assembly	2-79
2-32	Air Cleaner Intake Ducting	2-79
2-33	Alternator Diode and Circuit Breaker	2-82
2-34	Starter Relay	2-82
2-35	Ether Bottle, Air Dryer, and Air Dryer Mounting Bracket	2-85
2-36	Hydraulic Oil Filter Housing and Oil Level Gauge	2-87
2-37	Hydraulic Oil Reservoir	2-91
2-38	Directional Relief Valve	2-93
2-39	Steering Selector Valve and Switch	2-95
2-40	Transmission Oil Filter, Adapter, and Mounting Bracket	2-95
2-41	Steering Wheel	2-97
2-42	Headlight Shields	2-100
2-43	Turn Signal Switch and Flasher	2-100
2-43.1	Turn Signal Switch and Flasher (LVSA1 Series Vehicles Only)	2-102
2-44	Steering Column	2-102.1
2-45	Universal Joint and Steering linkage	2-105
2-46	Cab 90° Gear Box	2-105
2-47	Stop Light Switches	2-105
2-48	Low Air Pressure Switches	2-109
2-49	Brake Treadle Valve	2-109
2-50	Throttle Treadle Valve	2-112
2-51	Instrument Panel Manifolds	2-112
2-52	Main Air Manifold	2-117
2-53	Headlight Assembly	2-117
2-54	Composite Lights	2-120
2-55	Clearance Light Mounting Bracket and Clearance Lights	2-120
2-56	Reflectors	2-122
2-57	Cab Steps	2-125
2-58	Transmission Shift Cable	2-125
2-59	Transfer Case Shift Cable	2-128
2-60	Heater Control Cable Cable	2-128

TABLE OF CONTENTS -CONT

Section/Paragraph		Page
2-61	Heater Hoses and Fittings	2-131
2-62	Cab	2-131
2-63	Mirror Assembly	2-135
2-64	Grab Handles - Cab	2-137
2-65	Rubber Fenders - Cab	2-137
2-66	Roof Vent	2-137
2-67	Windshield Wiper Arms and Wiper Blades	2-137
2-68	Air Horns	2-142
2-69	Electric Horns	2-142
2-70	Frame 90° Gear Box	2-142
2-71	Door and Mirror Bracket	2-142
2-72	Air Horn Chain and Control Valve	2-147
2-73	Sun Visors	2-149
2-74	Headlight Dimmer Switch	2-149
2-75	Access Covers	2-149
2-76	Warning/Indicator Lights	2-154
2-77	Optic Ribbon Light Source	2-154
2-78	Optic Ribbons	2-157
2-79	Toggle Switches	2-158
2-80	Circuit Breakers	2-158
2-81	Magnetic Switches	2-161
2-82	Relay Switches	2-161
2-83	Resistors	2-161
2-84	Dome Light	2-164
2-85	Map Light	2-164
2-86	Instrument Panel Assembly	2-168
2-87	Low Air Pressure Alarm	2-168
2-88	Trailer Air Supply Valve	2-171
2-89	Parking Brake Valve	2-171
2-90	Ether Start Switch	2-174
2-91	Drive Line Lockup Switch	2-174
2-92	Air Restriction Indicator	2-176
2-93	Ignition Switch	2-179
2-94	Windshield Wiper Motors	2-179
2-95	Hand Control Valve	2-182
2-96	Windshield Wiper Control Valves	2-182
2-97	Windshield Washer Control Valve	2-184
2-98	Master Light Switch	2-185
2-99	Transmission Shift Control	2-188
2-100	Transfer Case Shift Lever	2-188
2-101	Heater Assembly	2-188
2-102	Heater Blower Assembly and Heater Core	2-192
2-103	Defroster Ducts	2-192
2-104	Seat Frame Assembly	2-192
2-105	Seat Belts	2-196
2-105.1	Seat Belts (LVSA1 Series Vehicles Only)	2-196
2-106	Cab Windows	2-197
2-107	Windshield Washer Reservoir, Hoses and Nozzles	2-199
2-107.1	Windshield Washer Reservoir, Hoses and Nozzles (LVSA1 Series Vehicles Only)	2-202
2-108	Cab Wiring Harness	2-202
2-109	Hydraulic Pump Propeller Shaft	2-202
2-110	Hydraulic Pump	2-202.2
2-111	Propeller Shaft - Transmission to Transfer Case	2-205

TABLE OF CONTENTS -CONT

Section/Paragraph		Page
2-112	Accumulator	2-205
2-112.1	Accumulator (LVSA1 Series Vehicles Only)	2-206.1
2-113	Fan Control Relief/Unload Valve	2-207
2-114	Coolant Filter and Adapter	2-207
2-115	Power Pack	2-210
2-116	Vehicle Step, Splash Guards, and Fender Rubbers	2-210
2-117	Wheel Chock Rack, Tool Stowage Box, and Fenders	2-211
2-118	Pillow Block Assembly	2-214
2-119	Cardan Joint	2-217
2-120	Propeller Shafts and Universal Joints	2-218
2-121	Transfer Case	2-218.1
2-122	Drag Links	2-226
2-123	Fuse Link Assembly	2-226
2-124	Yaw Control Assembly	2-229
2-125	Yaw Feedback Linkage	2-229
2-126	Bell Crank	2-232
2-127	Yaw Steering Cylinders	2-232
2-128	Articulation Joint	2-234
2-129	Shock Absorbers and Bushings	2-234
2-130	Torque Rods	2-234
2-131	Axle Assembly No. 1	2-240
2-132	Axle Assembly No. 2	2-254
2-133	Spring and Seat Assembly	2-264
2-134	Pressure Protection Valve	2-267
2-135	Quick Buildup Air Reservoir	2-267
2-136	Priority Fluid Control Valve	2-270
2-137	Demand Valve	2-273
2-138	Hydraulic Steering Manifold	2-273
2-139	Steering Relief Valve	2-275
2-140	Front Air Manifold	2-275
2-141	Glad Hands	2-278
2-142	Ball Valve	2-278
2-143	Relay Valves	2-281
2-144	Check Valves	2-284
2-145	Rear Air Manifold	2-284
2-146	Steering Shaft - Frame 90° Gear Box to Power Steering Gear	2-287
2-147	Pitman Arm	2-287
2-148	Power Steering Gear	2-287
2-149	Lockout Struts	2-290
2-150	Chassis Wiring Harness	2-293
2-151	Data Plates and Placards	2-295
2-152	Frame Assembly	2-295
III.	CLEANING, COATING, AND INSPECTION	2-296
2-153	Cleaning	2-296
2-154	Coating	2-301
2-155	Inspection	2-303
IV.	REPAIR AND REPLACEMENT	2-304
2-156	Repair and Replacement	2-304
2-157	Battery Cables, Batteries, and Battery Box	2-304
2-158	Wheel and Tire Assembly	2-307
2-159	Grille, Skid Plate, and Skid Plate Frame	2-308
2-160	Exterior Access Panels	2-309
2-161	Beacon Light and Mounting Bracket	2-309

TABLE OF CONTENTS -CONT

Section/Paragraph		Page
2-162	Exhaust Pipe and Muffler Assembly	2-312
2-163	Work Lights	2-314
2-164	Fuel Filters, Hand Priming Pump, and Mounting Bracket	2-316
2-165	Spare Tire and Wheel Assembly and Lifting Bracket	2-322
2-166	Spare Tire Hoist Winch	2-323
2-167	Spare Tire Hoist Winch Cable	2-325
2-168	Air Lines and Fittings	2-326
2-169	Spring Brake Valve	2-327
2-170	Quick Release Valve	2-328
2-170.1	Quick Release Valve (LSVA1 Series Vehicles Only)	2-328.1
2-171	Engine Cover, Radiator Grate, Radiator Grille	2-329
2-172	Hydraulic Hoses and Fittings	2-330
2-173	Hydraulic Oil Cooler	2-332
2-174	Transmission Oil Cooler	2-334
2-175	Cooling System Hoses and Tubes	2-336
2-176	Radiator and Fan Shroud	2-337
2-177	Fuel Lines, Vent Lines, Check Valves, and Fittings	2-342
2-178	Fuel Tanks	2-344
2-179	Motion Control Valve	2-350
2-180	Fan Mount/Radiator Support	2-355
2-181	Fan and Fan Motor	2-356
2-182	Quick Disconnect Fitting	2-357
2-183	Main Air Reservoirs	2-357
2-184	Grab Handle - Left Fender	2-362.1
2-184.1	Grab Handle Replacement (LVSA1 Series Vehicles Only)	2-362.1
2-185	Air Cleaner Assembly	2-362.2
2-186	Air Cleaner Intake Ducting	2-366.3
2-187	Alternator Diode and Circuit Breaker	2-367
2-188	Starter Relay	2-368
2-189	Ether Bottle, Air Dryer, and Air Dryer Mounting Bracket	2-369
2-190	Hydraulic Oil Filter Housing and Oil Level Gauge	2-370
2-190.1	Hydraulic Oil Filter Housing and Oil Level Gauge (LVSA1 Series Vehicles Only)	2-372.2
2-190.2	Hi-Pressure Hydraulic Filter and Head (LVSA1 Series Vehicles Only)	2-374
2-191	Hydraulic Oil Reservoir	2-374
2-192	Directional Relief Valve	2-375
2-193	Steering Selector Valve and Switch	2-377
2-194	Transmission Oil Filter, Adapter, and Mounting Bracket	2-378
2-195	Steering Wheel	2-380
2-196	Headlight Shields	2-380
2-197	Turn Signal Switch and Flasher	2-381
2-197.1	Turn Signal Switch and Flasher (LVSA1 Series Vehicles Only)	2-383
2-198	Steering Column	2-383
2-199	Universal Joint and Steering Linkage	2-386
2-200	Cab 90° Gear Box	2-387
2-201	Stop Light Switches	2-388
2-202	Low Air Pressure Switches	2-388
2-203	Brake Treadle Valve	2-389
2-204	Throttle Treadle Valve	2-389

TABLE OF CONTENTS-CONT

Section/Paragraph		Page
2-205	Instrument Panel Air Manifolds	2-389
2-206	Main Air Manifold	2-391
2-207	Headlight Assembly	2-392
2-208	Composite Lights	2-394
2-209	Clearance Light Mounting Bracket and Clearance Lights	2-395
2-210	Reflectors	2-396
2-211	Cab Steps	2-397
2-212	Transmission Shift Cable	2-398
2-213	Transfer Case Shift Cable	2-399
2-214	Heater Control Valve Cable	2-400
2-215	Heater Hoses and Fittings	2-401
2-216	Cab	2-402
2-217	Mirror Assembly	2-403
2-218	Grab Handles - Cab	2-404
2-219	Rubber Fenders - Cab	2-404
2-220	Roof Vent	2-405
2-221	Windshield Wiper Arms and Wiper Blades	2-406
2-222	Air Horns	2-407
2-223	Electric Horns	2-409
2-224	Frame 90° Gear Box	2-410
2-225	Door and Mirror Bracket	2-410
2-226	Rear Window, Door Windows, and Peep Glass	2-411
2-227	Air Horn Chain and Control Valve	2-411
2-228	Sun Visors	2-413
2-229	Headlight Dimmer Switch	2-413
2-230	Access Covers	2-414
2-231	Warning/Indicator Lights	2-415
2-232	Optic Ribbon Light Source	2-415
2-233	Optic Ribbons	2-416
2-234	Toggle Switches	2-417
2-235	Circuit Breakers	2-417
2-236	Magnetic Switches	2-418
2-237	Relay Switches	2-418
2-238	Resistors	2-419
2-239	Dome Light	2-419
2-240	Map Light	2-420
2-241	Instrument Panel Assembly	2-421
2-242	Low Air Pressure Alarm	2-422
2-243	Trailer Air Supply Valve	2-422
2-244	Parking Brake Valve	2-423
2-245	Ether Start Switch	2-424
2-246	Drive Line Lockup Switch	2-424
2-247	Air Restriction Indicator	2-425
2-248	Ignition Switch	2-425
2-249	Windshield Wiper Motors	2-426
2-250	Hand Control Valve	2-426
2-251	Windshield Wiper Control Valves	2-427
2-252	Windshield Washer Control Valve	2-427
2-253	Master Light Switch	2-428
2-254	Transmission Shift Control	2-429
2-255	Transfer Case Shift Lever	2-430

TABLE OF CONTENTS -CONT

Section/Paragraph		Page
2-256	Heater Assembly	2-430
2-257	Heater Blower Assembly and Heater Core	2-431
2-258	Defroster Ducts	2-437
2-259	Seat Frame Assembly	2-437
2-260	Seat Belts	2-440
2-260.1	Seat Belts (LVSA1 Series Vehicles Only)	2-440.1
2-261	Cab Windows	2-441
2-262	Windshield Washer Reservoir, Hoses and Nozzles	2-441
2-263	Cab Wiring Harness	2-443
2-264	Hydraulic Pump Propeller Shaft	2-444
2-265	Hydraulic Pump	2-446
2-266	Propeller Shaft - Transmission to Transfer Case	2-447
2-267	Accumulator	2-447
2-267.1	Accumulator (LVSA1 Series Vehicles Only)	2-448.1
2-268	Fan Control Relief/Unload Valve	2-449
2-269	Coolant Filter and Adapter	2-452
2-270	Power Pack	2-453
2-271	Vehicle Step, Splash Guards, and Fender Rubbers	2-453
2-272	Wheel Chock Rack, Tool Stowage Box, and Fenders	2-456
2-273	Pillow Block Assembly	2-458
2-274	Cardan Joint	2-461
2-275	Propeller Shafts and Universal Joints	2-462
2-276	Transfer Case	2-462
2-277	Drag Links	2-462
2-278	Fuse Link Assembly	2-464
2-279	Yaw Control Valve	2-468
2-280	Yaw Feedback Linkage	2-468
2-281	Bell Crank	2-472
2-282	Yaw Steering Cylinders	2-473
2-283	Articulation Joint	2-473
2-284	Shock Absorbers and Bushings	2-473
2-285	Torque Rods	2-473
2-286	Axle Assembly No. 1	2-474
2-287	Axle Assembly No. 2	2-489
2-288	Spring and Seat Assembly	2-501
2-289	Pressure Protection Valve	2-504
2-290	Quick Buildup Air Reservoir	2-504
2-291	Priority Fluid Control Valve	2-505
2-292	Demand Valve	2-508
2-293	Hydraulic Steering Manifold	2-511
2-294	Steering Relief Valve	2-512
2-295	Front Air Manifold	2-513
2-296	Glad Hands	2-514
2-297	Ball Valve	2-515
2-298	Relay Valves	2-515
2-299	Check Valves	2-518
2-300	Rear Air Manifold	2-519
2-301	Steering Shaft - Frame 90° Gear Box to Power Steering Gear	2-520
2-302	Pitman Arm	2-520
2-303	Power Steering Gear	2-521
2-304	Lockout Struts	2-521
2-305	Chassis Wiring Harness	2-522

TABLE OF CONTENTS -CONT

Section/Paragraph		Page
2-306	Data Plates and Placards	2-523
2-307	Frame Assembly	2-523
V.	REASSEMBLY AND INSTALLATION	2-525
2-308	Reassembly and Reinstallation	2-525
2-309	Frame Assembly	2-525
2-310	Data Plates and Placards	2-525
2-311	Chassis Wiring Harness	2-526
2-312	Lockout Struts	2-526
2-313	Power Steering Gear	2-527
2-314	Pitman Arm	2-527
2-315	Steering Shaft - Frame 90° Gear Box to Power Steering Gear	2-529
2-316	Rear Air Manifold	2-529
2-317	Check Valves	2-530
2-318	Relay Valves	2-530
2-319	Ball Valve	2-531
2-320	Glad Hands	2-532
2-321	Front Air Manifold	2-533
2-322	Steering Relief Valve	2-534
2-323	Hydraulic Steering Manifold	2-535
2-324	Demand Valve	2-535
2-325	Priority Fluid Control Valve	2-535
2-326	Quick Buildup Air Reservoir	2-536
2-327	Pressure Protection Valve	2-537
2-328	Spring and Seat Assembly	2-538
2-329	Axle Assembly No. 2	2-539
2-330	Axle Assembly No. 1	2-543
2-331	Torque Rods	2-551
2-332	Shock Absorbers and Bushings	2-553
2-333	Articulation Joint	2-553
2-334	Yaw Steering Cylinders	2-553
2-335	Bell Crank	2-554
2-336	Yaw Feedback Linkage	2-555
2-337	Yaw Control Valve	2-555
2-338	Fuse Link Assembly	2-556
2-339	Drag Links	2-556
2-340	Transfer Case	2-557
2-341	Propeller Shafts and Universal Joints	2-558
2-342	Cardan Joints	2-559
2-343	Pillow Block Assembly	2-560
2-344	Fenders, Tool Stowage Box, and Wheel Chock Rack	2-560
2-345	Fender Rubbers, Splash Guards, and Vehicle Step	2-561
2-346	Power Pack	2-562
2-347	Coolant Filter and Adapter	2-562
2-348	Fan Control Relief/Unload Valve	2-562.1
2-349	Accumulator	2-562.1
2-349.1	Accumulator (LVSA1 Series Vehicles Only)	2-563
2-350	Propeller Shaft - Transmission to Transfer Case	2-564
2-351	Hydraulic Pump	2-564
2-352	Hydraulic Pump Propeller Shaft	2-564

TABLE OF CONTENTS -CONT

Section/Paragraph		Page
2-353	Cab Wiring Harness	2-564.1
2-354	Windshield Washer Reservoir, Hoses and Nozzles	2-564.1
2-354.1	Windshield Washer Reservoir, Hoses, and Nozzles (LVSA1 Series Vehicles Only)	2-564.1
2-355	Cab Windows	2-565
2-356	Seat Frame Assembly	2-566
2-357	Seat Belts	2-566.1
2-357.1	Seat Belts (LVSA1 Series Vehicles Only)	2-566.1
2-358	Defroster Ducts	2-567
2-359	Heater Core and Heater Blower Assembly	2-567
2-360	Heater Assembly	2-568
2-361	Transfer Case Shift Lever	2-568
2-362	Transmission Shift Control	2-569
2-363	Master Light Switch	2-569
2-364	Windshield Washer Control Valve	2-569
2-365	Windshield Wiper Control Valves	2-570
2-366	Hand Control Valve	2-571
2-367	Windshield Wiper Motors	2-571
2-368	Ignition Switch	2-572
2-369	Air Restriction Indicator	2-573
2-370	Drive Line Lockup Switch	2-573
2-371	Ether Start Switch	2-574
2-372	Parking Brake Valve	2-575
2-373	Trailer Air Supply Valve	2-576
2-374	Low Air Pressure Alarm	2-577
2-375	Instrument Panel Assembly	2-577
2-376	Map Light	2-578
2-377	Dome Light	2-579
2-378	Resistors	2-579
2-379	Relay Switches	2-580
2-380	Magnetic Switches	2-580
2-381	Circuit Breakers	2-580
2-382	Toggle Switches	2-581
2-383	Optic Ribbons	2-581
2-384	Optic Ribbon Light Source	2-582
2-385	Warning/Indicator Lights	2-582
2-386	Access Covers	2-582
2-387	Headlight Dimmer Switch	2-583
2-388	Sun Visors	2-584
2-389	Air Horn Control Valve and Chain	2-584
2-390	Mirror Bracket and Door	2-585
2-391	Frame 90° Gear Box	2-585
2-392	Electric Horns	2-585
2-393	Air Horns	2-586
2-394	Windshield Wiper Blades and Wiper Arms	2-587
2-395	Roof Vent	2-587
2-396	Rubber Fenders - Cab	2-587
2-397	Grab Handles - Cab	2-587
2-398	Mirror Assembly	2-588
2-399	Cab	2-588
2-400	Heater Hoses and Fittings	2-589
2-401	Heater Control Valve Cable	2-590
2-402	Transfer Case Shift Cable	2-590

TABLE OF CONTENTS -CONT

Section/Paragraph		Page
2-403	Transmission Shift Cable	2-591
2-404	Cab Steps	2-592
2-405	Reflectors	2-592.1
2-406	Clearance Lights and Clearance Light Mounting Bracket	2-593
2-407	Composite Lights	2-594
2-408	Headlight Assembly	2-594
2-409	Main Air Manifold	2-594
2-410	Instrument Panel Air Manifolds	2-595
2-411	Throttle Treadle Valve	2-597
2-412	Brake Treadle Valve	2-597
2-413	Low Air Pressure Switches	2-598
2-414	Stop Light Switches	2-599
2-415	Cab 90° Gear Box	2-599
2-416	Steering Linkage and Universal Joint	2-599
2-417	Steering Column	2-600
2-418	Turn Signal Switch and Flasher	2-600
2-418.1	Turn Signal Switch and Flasher (LVSA1 Series Vehicles Only)	2-601
2-419	Headlight Shields	2-601
2-420	Steering Wheel	2-602
2-421	Transmission Oil Filter Mounting Bracket, Adapter, and Oil Filter	2-602
2-422	Steering Selector Switch and Valve	2-603
2-423	Directional Relief Valve	2-604
2-424	Hydraulic Oil Reservoir	2-604
2-425	Hydraulic Oil Level Gauge and Oil Filter Housing	2-605
2-426	Air Dryer Mounting Bracket, Air Dryer, and Ether Bottle	2-606
2-427	Starter Relay	2-608
2-428	Circuit Breaker and Alternator Diode	2-608
2-429	Air Cleaner Intake Ducting	2-609
2-430	Air Cleaner Assembly	2-609
2-431	Grab Handle - Left Fender	2-610
2-432	Main Air Reservoirs	2-610
2-433	Quick Disconnect Fitting	2-611
2-434	Fan Motor and Fan	2-611
2-435	Fan Mount/Radiator Support	2-612
2-436	Motion Control Valve	2-613
2-437	Fuel Tanks	2-613
2-438	Fittings, Check Valves, Vent Lines, and Fuel Lines	2-614
2-439	Fan Shroud and Radiator	2-615
2-440	Cooling System Hoses and Tubes	2-616
2-441	Transmission Oil Cooler	2-617
2-442	Hydraulic Oil Cooler	2-617
2-443	Hydraulic Hoses and Fittings	2-618
2-444	Radiator Grille, Radiator Grate, and Engine Cover	2-620
2-445	Quick Release Valve	2-621
2-445.1	Quick Release Valve (LVSA1 Series Vehicles Only)	2-621
2-446	Spring Brake Valve	2-621
2-447	Air Lines and Fittings	2-622
2-448	Spare Tire Hoist Winch Cable	2-623
2-449	Spare Tire Hoist Winch	2-624
2-450	Lifting Bracket and Spare Tire and Wheel Assembly	2-624
2-451	Mounting Bracket, Hand Priming Pump, and Fuel Filters	2-624
2-452	Work Lights	2-626

TABLE OF CONTENTS -CONT

Section/Paragraph		Page
2-453	Exhaust Pipe and Muffler Assembly	2-627
2-454	Mounting Bracket and Beacon Light	2-628
2-455	Exterior Access Panels	2-628
2-456	Skid Plate Frame, Skid Plate, and Grille	2-628
2-457	Wheel and Tire Assembly	2-629
2-457.1	Slave Connector (LVSA1 Series Vehicles Only)	2-630
2-457.2	Battery Cables, Batteries, and Battery Box (LVSA1 Series Vehicles Only)	2-630.1
2-458	Battery Box, Batteries, and Battery Cables	2-630.2
VI.	ALIGNMENTS AND ADJUSTMENTS	2-633
2-459	Alignments	2-633
2-460	Adjustments	2-633
VII.	LUBRICATION, PAINTING, AND MARKING	2-641
2-461	Lubrication, Painting, and Marking	2-641
VIII.	POST ASSEMBLY INSPECTION	2-642
2-462	Post Assembly Inspection	2-642
IX.	ROAD TEST AND FINAL INSPECTION	2-663
2-463	Road Test and Final Inspection	2-663
APPENDIX A	REFERENCES	A-1
A-1	Publication Index	A-1
A-2	Other Publications	A-1
APPENDIX B	LIST OF MATERIALS	B-1
B-1	List of Materials	B-1
APPENDIX C	LIST OF ABBREVIATIONS	C-1
C-1	List of Abbreviations	C-1
APPENDIX D	IROAN PROCEDURES	D-1
I.	GENERAL INFORMATION	D-1
D-1	Purpose	D-1
D-2	Scope	D-1
D-3	Waivers	D-1
D-4	Pre-shop Analysis and Degree of Disassembly	D-1
D-5	General Cleaning	D-1
D-6	Preparation for Shipment and/or Storage	D-1
D-7	Oil Seal and Gasket Leakage	D-1

TABLE OF CONTENTS-CONT

Section/Paragraph		Page
II.	REPAIR PROCEDURES	D-3
D-8	Air Cleaner Assembly	D-3
D-9	Axle Assemblies	D-3
D-10	Differentials	D-3
D-11	Batteries	D-3
D-12	Brake System	D-4
D-13	Cab Assembly	D-5
D-14	Cooling System	D-5
D-15	Cushions, Seat Pads, Cushion-Like Parts, Seat Backs, and Frames	D-6
D-16	Data Plates and Placards	D-6
D-17	Electrical System	D-6
D-18	Electric Motors (Starter and Alternator)	D-7
D-19	Trailer Connector Coupling	D-7
D-20	Engine	D-7
D-21	Governor	D-8
D-22	Fuel System	D-8
D-23	Injectors and Nozzles	D-8
D-24	Accessory Drive Belts	D-8
D-25	Exhaust System	D-8
D-26	Transmission	D-8
D-27	Transfer Case and Power Take-Off (PTO)	D-8
D-28	Gaskets and Seals	D-9
D-29	Universal Joints	D-9
D-30	Frame	D-9
D-31	Fenders	D-9
D-32	Glass	D-9
D-33	Mirrors	D-9
D-34	Weather Stripping and Dust Seals	D-10
D-35	Hydraulic System	D-10
D-36	Instruments and Gauges	D-10
D-37	Steering Assemblies	D-10
D-38	Power Steering	D-11
D-39	Suspension System	D-11
D-40	Torque Rods	D-11
D-41	Wheels	D-12
D-42	Tires	D-12
D-43	Special Purpose Kits	D-12
D-44	Lubrication	D-12
D-45	Paint (Interior/Exterior)	D-13
D-46	Rustproofing	D-13

LIST OF ILLUSTRATIONS

Figure	Title	Page
1-1	Power Unit, Front, 12-1/2 Ton, 4x4, MK48, Mod 0	1-0
1-2	Recommended Production Process Flow Chart	1-2
1-3	Data Plate and Placard Location	1-6
2-1	Battery Cables, Batteries, and Battery Box	2-18
2-1.1	Battery Cables, Batteries, and Battery Box (LVSA1 Series Vehicles Only) (Sheet 1 of 2)	2-18.2
2-1.1	Battery Cables, Batteries, and Battery Box (LVSA1 Series Vehicles Only) (Sheet 2 of 2)	2-18.4
2-1.2	Slave Connector (LVSA1 Series Vehicles Only)	2-19
2-2	Wheel and Tire Assembly	2-20
2-3	Jack Stand Positions (Underside View)	2-22
2-4	Lug Nuts - Wheel and Tire Assembly	2-23
2-5	Grille	2-24
2-6	Skid Plate and Skid Plate Frame	2-25
2-7	Exterior Access Panels	2-27
2-8	Beacon Light and Mounting Bracket	2-28
2-9	Exhaust Pipe and Muffler Assembly	2-30
2-10	Work Lights	2-31
2-11	Fuel/Water Separator	2-32
2-12	Secondary Fuel Filter and Adapter	2-34
2-13	Hand Priming Pump and Mounting Bracket	2-35
2-14	Spare Tire and Wheel Assembly and Lifting Bracket	2-38
2-15	Spare Tire Hoist Winch	2-39
2-16	Spare Tire Hoist Winch Cable	2-40
2-17	Air Line Replacement	2-42
2-18	Compression Type Fittings	2-42
2-19	Reusable Type Fittings	2-43
2-20	Spring Brake Valve	2-44
2-21	Quick Release Valve	2-46
2-21.1	Quick Release Valve (LVSA1 Series Vehicles Only)	2-46.1
2-22	Engine Cover	2-47
2-23	Radiator Grate	2-48
2-24	Radiator Grille	2-50
2-25	Hydraulic Hoses and Fittings	2-51
2-26	Flange Block	2-53
2-27	Hydraulic Oil Cooler	2-55
2-28	Transmission Oil Cooler	2-57
2-29	Lower Radiator Hoses and Tubes	2-58
2-30	Upper Radiator Hoses and Tubes	2-60
2-31	Radiator	2-62
2-32	Fan Shroud	2-63
2-33	Fuel Lines, Vent Lines, Check Valves, and Fittings	2-65
2-34	Left Fuel Tank	2-66
2-35	Right Fuel Tank	2-68
2-36	Motion Control Valve	2-70
2-37	Fan/Mount Radiator Support	2-71
2-38	Fan	2-73
2-39	Fan Motor	2-74
2-40	Quick Disconnect Fitting	2-75
2-41	Main Air Reservoirs	2-77
2-42	Grab Handle - Left Fender	2-78
2-43	Air Cleaner Assembly	2-80
2-44	Air Cleaner Intake Ducting	2-81
2-45	Alternator Diode and Circuit Breaker	2-83
2-46	Starter Relay	2-84
2-47	Ether Bottle	2-86

LIST OF ILLUSTRATIONS -CONT

Figure	Title	Page
2-48	Air Dryer	2-88
2-49	Air Dryer Mounting Bracket	2-89
2-50	Hydraulic Oil Filter Housing and Oil Level Gauge	2-90
2-51	Hydraulic Oil Reservoirs	2-92
2-52	Directional Relief Valve	2-94
2-53	Steering Selector Valve and Switch	2-96
2-54	Transmission Oil Filter, Adapter, and Mounting Bracket	2-98
2-55	Steering Wheel	2-99
2-56	Headlight Shields	2-101
2-57	Turn Signal Switch and Flasher	2-102.1
2-57.1	Turn Signal Switch and Flasher (LVSA1 Series Vehicles Only)	2-103
2-58	Steering Column	2-104
2-59	Universal Joint and Steering Linkage	2-106
2-60	Cab 90° Gear Box	2-107
2-61	Stop Light Switches	2-108
2-62	Low Air Pressure Switches	2-110
2-63	Brake Treadle Valve	2-111
2-64	Throttle Treadle Valve	2-113
2-65	Instrument Panel Air Manifolds	2-114
2-66	Main Air Manifold	2-118
2-67	Headlight Assembly	2-119
2-68	Composite Lights	2-121
2-69	Clearance Light Mounting Bracket and Clearance Lights	2-123
2-70	Reflectors	2-124
2-71	Cab Steps	2-126
2-72	Transmission Shift Cable	2-127
2-73	Transfer Case Shift Cable	2-129
2-74	Heater Control Valve Cable	2-130
2-75	Heater Hoses and Fittings	2-132
2-76	Cab	2-133
2-77	Mirror Assembly	2-136
2-78	Grab Handles - Cab	2-138
2-79	Rubber Fenders - Cab	2-139
2-80	Roof Vent	2-140
2-81	Windshield Wiper Arms and Wiper Blades	2-141
2-82	Air Horns	2-143
2-83	Electric Horns	2-144
2-84	Frame 90° Gear Box	2-145
2-85	Door and Mirror Bracket	2-146
2-86	Air Horn Chain and Control Valve	2-148
2-87	Sun Visors	2-150
2-88	Headlight Dimmer Switch	2-151
2-89	Roof Access Cover	2-152
2-90	Access Covers	2-153
2-91	Warning/Indicator Lights	2-155
2-92	Optic Ribbon Light Source	2-156
2-93	Optic Ribbons	2-157
2-94	Toggle Switches	2-159
2-95	Circuit Breakers	2-160
2-96	Magnetic Switches	2-162
2-97	Relay Switches	2-163
2-98	Resistors	2-165
2-99	Dome Light	2-166

LIST OF ILLUSTRATIONS -CONT

Figure	Title	Page
2-100	Map Light	2-167
2-101	Instrument Panel Assembly	2-169
2-102	Low Air Pressure Alarm	2-170
2-103	Trailer Air Supply Valve	2-172
2-104	Parking Brake Valve	2-173
2-105	Ether Start Switch	2-175
2-106	Drive Line Lockup Switch	2-177
2-107	Air Restriction Indicator	2-178
2-108	Ignition Switch	2-180
2-109	Windshield Wiper Motors	2-181
2-110	Hand Control Valve	2-183
2-111	Windshield Wiper Control Valves	2-185
2-112	Windshield Washer Control Valve	2-186
2-113	Master Light Switch	2-187
2-114	Transmission Shift Control	2-189
2-115	Transfer Case Shift Lever	2-190
2-116	Heater Assembly	2-191
2-117	Heater Blower Assembly and Heater Core	2-193
2-118	Defroster Ducts	2-194
2-119	Seat Frame Assembly (Sheet 1 of 2)	2-194.1
2-119	Seat Frame Assembly (Sheet 2 of 2)	2-195.1
2-120	Seat Belts	2-196.1
2-120.1	Seat Belts (LVSA1 Series Vehicles Only)	2-197
2-121	Windshield	2-198
2-122	Rear Window and Peep Window Glass	2-200
2-123	Windshield Washer Reservoir, Hoses, and Nozzles	2-201
2-123.1	Windshield Washer Reservoir, Hoses, and Nozzles (LVSA1 Series Vehicles Only)	2-202.1
2-124	Hydraulic Pump Propeller Shaft	2-203
2-125	Hydraulic Pump	2-204
2-126	Accumulator	2-206
2-126.1	Accumulator (LVSA1 Series Vehicles Only)	2-206.2
2-127	Fan Control Relief/Unload Valve	2-208
2-128	Coolant Filter and Adapter	2-209
2-129	Vehicle Step	2-211
2-130	Splash Guards and Fender Rubbers	2-212
2-131	Wheel Chock Rack and Tool Stowage Box	2-213
2-132	Fenders	2-215
2-133	Pillow Block Assembly	2-216
2-134	Cardan Joint	2-217
2-135	Propeller Shafts with Companion Flanges	2-219
2-136	Propeller Shafts with Yokes	2-220
2-137	Transfer Case	2-222
2-138	Drag Links	2-228
2-139	Fuse Link Assembly	2-228
2-140	Yaw Control Valve	2-230
2-141	Yaw Feedback Linkage	2-231
2-142	Bell Crank	2-233
2-143	Yaw Steering Cylinders	2-235
2-144	Shock Absorbers and Bushings	2-236
2-145	Torque Rods	2-238
2-146	Axle Assembly No. 1	2-241
2-147	Hub and Drum Assembly and Wheel Bearings (Axle Assembly No.1)	2-244
2-148	Brake Shoes and Linings (Axle Assembly No. 1)	2-246
2-149	Brake Chamber (Axle Assembly No. 1)	2-247
2-150	Plunger Assemblies (Actuating and Anchor) Axle Assembly No.1	2-249

LIST OF ILLUSTRATIONS -CONT

Figure	Title	Page
2-151	Brake Spider and Skein (Axle Assembly No. 1)	2-250
2-152	Axle Shaft (Axle Assembly No. 1)	2-252
2-153	Tie Rod and Axle Ball Socket Wiper Seal (Axle Assembly No. 1)	2-253
2-154	Axle Assembly No. 2	2-255
2-155	Brake Chamber (Axle Assembly No. 2)	2-258
2-156	Axle Shaft (Axle Assembly No. 2)	2-260
2-157	Hub and Drum Assembly and Wheel Bearings (Axle Assembly No. 2)	2-261
2-158	Brake Shoes and Linings (Axle Assembly No. 2)	2-263
2-159	Camshaft and Slack Adjuster (Axle Assembly No. 2)	2-265
2-160	Brake Spider and Bracket (Axle Assembly No. 2)	2-266
2-161	Spring and Seat Assembly	2-268
2-162	Pressure Protection Valve	2-269
2-163	Quick Buildup Air Reservoir	2-271
2-164	Priority Fluid Control Valve	2-272
2-165	Demand Valve	2-274
2-166	Hydraulic Steering Manifold	2-276
2-167	Steering Relief Valve	2-277
2-168	Front Air Manifold	2-279
2-169	Glad Hands	2-280
2-170	Ball Valve	2-282
2-171	Relay Valves	2-283
2-172	Check Valves	2-285
2-173	Rear Air Manifold	2-286
2-174	Steering Shaft - Frame 90° Gear Box to Power Steering Gear	2-288
2-175	Pitman Arm	2-289
2-176	Power Steering Gear	2-291
2-177	Lockout Struts	2-292
2-178	Chassis Wiring Harness	2-294
2-179	Data Plates and Placards	2-295
2-180	Battery Box Disassembly/Assembly	2-305
2-181	Beacon Light Disassembly/Assembly	2-310
2-182	Work Lights Disassembly/Assembly	2-315
2-183	Fuel/Water Separator Disassembly/Assembly	2-318
2-184	Spare Tire Hoist Winch Disassembly/Assembly	2-324
2-185	Radiator Disassembly/Assembly	2-338
2-186	Left Fuel Tank Disassembly/Assembly	2-345
2-187	Right Fuel Tank Disassembly/Assembly	2-348
2-188	Motion Control Valve Disassembly/Assembly	2-351
2-189	Left Main Air Reservoir Disassembly/Assembly	2-358
2-190	Left Main Air Reservoir Disassembly/Assembly	2-361
2-191	Air Cleaner Disassembly/Assembly	2-364
2-191.1	Air Cleaner Filter Element Disassembly/Assembly (LVSA1 Series Vehicles Only)	2-366.1
2-192	Hydraulic Oil Filter Housing Disassembly/Assembly	2-371
2-192.1	Hydraulic Oil Filter Housing Disassembly/Assembly (LVSA1 Series Vehicles Only)	2-372.2
2-193	Directional Relief Valve Disassembly/Assembly	2-376
2-194	Steering Column Disassembly/Assembly	2-384
2-195	Air Horns Disassembly/Assembly	2-408
2-196	Heater Blower Disassembly/Assembly	2-432
2-197	Seat Frame Disassembly/Assembly	2-438
2-198	Hydraulic Pump Propeller Shaft Disassembly/Assembly	2-445
2-199	Accumulator Disassembly/Assembly	2-448
2-200	Fan Control Disassembly/Assembly	2-450
2-201	Fuse Link Disassembly/Assembly	2-465

LIST OF ILLUSTRATIONS-CONT

Figure	Title	Page
2-202	Yaw Feedback Linkage Disassembly/Assembly	2-469
2-203	Brake Drums (Axles No. 1 and 2)	2-477
2-204	Brake Shoes and Linings (Axle No. 1) Disassembly/Assembly	2-480
2-205	Brake Chamber (Axle No. 1) Disassembly/Assembly	2-482
2-206	Brake Chamber (Axle No. 2) Disassembly/Assembly	2-491
2-207	Brake Shoes and Linings (Axle No. 2) Disassembly/Assembly	2-498
2-208	Spring and Seat Disassembly/Assembly	2-502
2-209	Priority Fluid Control Valve Disassembly/Assembly	2-506
2-210	Demand Valve Disassembly/Assembly	2-509
2-211	Relay Valves Disassembly/Assembly	2-516
2-212	Power Steering Gear Mounting Bolt Torque Sequence	2-528
2-213	Brake Treadle Valve Adjustment	2-634
2-214	Priority Fluid Control Valve Adjustment	2-635
2-215	Transfer Case Shift Linkage Adjustment	2-637
2-216	Brake Adjustment (Axle No. 1)	2-639
2-217	Brake Adjustment (Axle No. 2)	2-640
D-1	IROAN Overhaul Data Plate	D-6

SAFETY SUMMARY-CONT

The following WARNINGS and CAUTIONS appear in this Depot Maintenance Manual and are repeated here for emphasis.

WARNING

To prevent personal injury, disconnect batteries. Do not wear watches, rings, or other jewelry when working on electrical components. (Pages 2-17, 18.1, 29, 82, 102.1, 105, 109, 117, 120, 122, 158, 161, 164, 168, 171, 174, 179, 293, and 316)

WARNING

Do not smoke or use an open flame around batteries. Sparks may cause batteries to explode. (Pages 2-17, 18.1, and 630)

WARNING

To prevent arcing and personal injury, do not allow tools to contact battery box or battery terminals when removing or installing cables. (Pages 2-17, 18.1, and 630)

WARNING

When disconnecting battery cables, always disconnect ground terminal first. When reconnecting always connect ground cables last. (Pages 2-17 and 2-18.1)

WARNING

The MK48 is extremely front-heavy when detached from the trailer. Do not attempt to raise No. 2 axle without placing two jack stands at the front lifting brackets. Serious injury or death could result. (pages 2-19)

WARNING

Before performing any type of service on wheel and tire assembly (1, Figure 2-2), always inspect lockring (2), flange (3), and rim (8) on the inside and outside of the wheel. A loosened lockring (2), flange (3), or bent rim (8) is very dangerous. (Page 2-19)

WARNING

Always deflate tire (4) by removing valve stem cap (5) and valve stem core (9) before attempting wheel and tire assembly (1) removal. Even a flat tire may retain sufficient air pressure to blow off a loosened rim component with enough force to cause bodily injury. Stand out of the trajectory area or personal injury or death may occur. (Pages 2-19)

SAFETY SUMMARY-CONT

WARNING

The skid plate is very heavy. To prevent serious personal injury or death and to keep skid plate from falling, use an overhead lifting device to support skid plate. (Page 2-21)

WARNING

The skid plate frame is very heavy. To prevent serious personal injury or death, use an overhead lifting device to remove skid plate frame from vehicle. (Page 2-26)

WARNING

The exhaust pipe and muffler assembly is very heavy. To prevent personal injury, use two slings, if necessary, and an overhead lifting device to remove exhaust pipe and muffler assembly from vehicle. (Page 2-26)

WARNING

The spare tire and wheel assembly is very heavy. To prevent personal injury, do not get between spare tire and wheel assembly and vehicle during removal procedures. (Page 2-37)

WARNING

Air lines under pressure will move violently when removed. To prevent personal injury, drain all air pressure from system before removing pressurized components. (Pages 2-41, 43, 45, 69, 72, 87, 112, 116, 117, 171, 174, 179, 182, 184, 245, 257, 267, 275, 278, 281, and 284)

WARNING

The radiator grille is very heavy and awkward to handle. To prevent personal injury, use an overhead lifting device to lift radiator grille from vehicle. Help from assistant(s) may be necessary to guide radiator grille during removal procedures. (Page 2-49)

WARNING

To prevent personal injury and damage to fittings, use proper size wrenches when removing fittings. (Pages 2-49 and 2-72)

WARNING

Hydraulics may be under pressure and can spurt out when lines are disconnected. To prevent personal injury, crack all lines slowly, keep face clear of lines, and wear safety glasses when working with hydraulic system. (Pages 2-54, 67, 69, 87, 91, 93, 95, 202.2, 205, 207, 218.1, 229, 232, 270, 273, 275, and 287)

SAFETY SUMMARY-CONT

WARNING

Hydraulic oil cooler is very heavy and awkward to handle. To prevent personal injury, use an overhead lifting device to remove hydraulic oil cooler from vehicle. Help from assistant(s) may be necessary to guide hydraulic oil cooler during removal procedures. (Page 2-54)

WARNING

The transmission oil cooler is very heavy and awkward to handle. To prevent personal injury, use an overhead lifting device to remove transmission oil cooler from vehicle. Help from assistant(s) may be necessary to guide transmission oil cooler during removal procedures. (Page 2-54)

WARNING

The radiator is very heavy and awkward to handle. To prevent personal injury, use an overhead lifting device to remove radiator from vehicle. Help from assistant(s) may be necessary to guide radiator during removal procedures. (Page 2-61)

WARNING

To prevent personal injury, if fuel line is under pressure, crack or open line slowly to bleed off pressure. Use a container to catch run-off fuel. (Page 2-64)

WARNING

The left fuel tank is heavy and awkward to handle. To prevent personal injury, use an overhead lifting device to remove fuel tank from fender. (Page 2-64.1)

WARNING

To prevent personal injury, direct personnel to stay clear of fuel tanks during removal procedures. (Page 2-67)

WARNING

The right fuel tank is heavy and awkward to handle. To prevent personal injury, use an overhead lifting device to remove the right fuel tank from the fender. (Page 2-67)

WARNING

The fan mount/radiator support is very heavy. To prevent personal injury, use an overhead lifting device to remove the fan mount/radiator support. (Page 2-69)

SAFETY SUMMARY-CONT

WARNING

The fan motor is very heavy. To prevent personal injury, support fan motor during removal with lifting device or help from assistant(s). (Page 2-72)

WARNING

The main air reservoirs are very heavy and awkward to handle. To prevent personal injury, use an overhead lifting device when removing main air reservoirs from fan mount/radiator support. (Page 2-76)

WARNING

The air cleaner assembly is very heavy. To prevent personal injury, use a sling and an overhead lifting device to remove air cleaner assembly from vehicle. (Page 2-79)

WARNING

To prevent personal injury, direct personnel to stay clear of air cleaner assembly during removal procedures. (Page 2-79)

WARNING

The ether bottle may retain some pressure. To prevent personal injury, wear eye protection and keep face clear of ether bottle during removal procedures. (Page 2-85)

WARNING

The hydraulic oil reservoir is very heavy. To prevent personal injury, use lifting device to remove hydraulic oil reservoir from vehicle. (Page 2-93)

WARNING

To prevent personal injury, direct personnel to stand clear of hydraulic oil reservoir during removal procedures. (Page 2-93)

WARNING

The cab is very heavy. To prevent personal injury, use proper lifting slings and an overhead lifting device to remove cab. (Page 2-135)

SAFETY SUMMARY-CONT

WARNING

To prevent personal injury, direct personnel to stand clear of cab during removal procedures. (Page 2-135)

WARNING

The door is very heavy and awkward to handle. To prevent personal injury, use an overhead lifting device to remove door from vehicle. (Page 2-147)

WARNING

The hydraulic pump weighs approximately 60 pounds and is located in an awkward spot. To prevent personal injury, or damage to pump, have assistant(s) help remove hydraulic pump from MK48. (Page 2-202.2)

WARNING

The pillow block assembly is very heavy and awkward to handle. To prevent personal injury, use a lifting device or help from assistant(s) to remove pillow block assembly from vehicle. (Page 2-214)

WARNING

The Cardan joint is very heavy and awkward to handle. To prevent personal injury, use a lifting device or help from assistant(s) to remove Cardan joint from vehicle. (Page 2-217)

WARNING

Propeller shafts and universal joints are very heavy. To prevent personal injury, be very careful when removing propeller shafts and universal joints. Use proper lifting equipment or assistant(s) when handling propeller shafts and universal joints. (Page 2-218)

WARNING

The transfer case is very heavy. To prevent personal injury, ensure eyebolt will support the weight of the transfer case. (Page 2-221)

SAFETY SUMMARY-CONT

WARNING

To prevent personal injury or damage to equipment, have assistant(s) guide transfer case out of frame during removal procedures. (Page 2-221)

WARNING

To prevent personal injury, direct personnel to stay clear of transfer case during removal procedures. (Page 2-221)

WARNING

To prevent personal injury, support transfer case when it is on the ground so it will not fall over on personnel. (Page 2-226)

WARNING

The drag link is very heavy. To prevent personal injury, have assistant(s) help hold drag link during removal procedures. (Page 2-226)

WARNING

The fuse link assembly is heavy. To prevent personal injury, have assistant(s) help hold fuse link assembly during removal procedures. (Page 2-226)

WARNING

Due to the weight of the nose box, axle assembly no. 1 is extremely front-heavy. Use a differential jack that will support the nose box on axle assembly no. 1 and will prevent it from falling forward when torque rods are removed. To prevent possible serious injury to personnel and damage to equipment, be extremely careful when removing torque rods. (Page 2-234)

WARNING

Axle assembly no. 1 is heavier on left side. To prevent personal injury or possible damage to equipment, axle assembly no. 1 must be chained to differential jack to be properly supported and balanced. (Pages 2-234, 240, and 550)

WARNING

The torque rods are very heavy. To prevent personal injury, have assistant(s) help remove torque rods from vehicle. (Page 2-234)

SAFETY SUMMARY-CONT

WARNING

Axle assembly no. 1 is very awkward to handle due to the weight of the nose box which causes axle assembly no. 1 to be extremely front-heavy. Use a differential jack that will support the nose box on axle assembly no. 1 and prevent it from falling forward during removal procedures. To prevent possible serious injury to personnel and damage to equipment, be extremely careful when removing axle assembly no. 1. (Page 2-240)

WARNING

Hub and drum assembly is extremely heavy. To prevent serious injury, hub and drum assembly must not fall on personnel. Ensure hub and drum assembly is safely secured to floor jack. (Pages 2-243 and 2-262)

WARNING

To prevent damage to lungs, respirator shall be worn when working with brake linings or other materials containing asbestos. (Pages 2-243, 262, 478, and 496)

WARNING

Dispose of brake linings according to local, state, and federal regulations governing the disposal of asbestos or material containing asbestos. (Pages 2-245, 262, 478, and 496)

WARNING

The axle shaft assembly is heavy. To prevent personal injury, have assistant(s) help remove axle shaft assembly from axle ball socket assembly. (Page 2-251)

WARNING

The tie rod is heavy. To prevent personal injury, have assistant(s) help remove tie rod from under vehicle. (Page 2-251)

WARNING

The axle ball socket is very heavy. To prevent personal injury, secure axle ball socket to transmission jack when removing axle ball socket from axle housing. (Page 2-254)

WARNING

The brake chamber contains a spring under great pressure. To prevent personal injury or death, never work directly behind the brake chamber. Cage spring before removing brake chamber. If caging bolt will not engage properly, spring may be broken. (Page 2-257)

SAFETY SUMMARY-CONT

WARNING

If brake chamber is clogged with mud, sand, or dirt, do not proceed with spring caging operation. To prevent personal injury, the brake chamber must be cleared before spring caging operation. (Page 2-257)

WARNING

To prevent personal injury, wear eye protection for the following step. (Page 2-259)

WARNING

The spring and seat assembly is very heavy. To prevent personal injury, use an overhead lifting device to remove spring and seat assembly. (Page 2-264)

WARNING

To prevent personal injury, direct personnel to stay clear of spring and seat assembly during removal procedures. (Page 2-264)

WARNING

The demand valve is very heavy. To prevent personal injury, have assistant(s) help remove demand valve from MK48. (Page 2-273)

WARNING

The pitman arm is heavy. To prevent personal injury, be careful not to drop pitman arm on personnel. (Page 2-287)

WARNING

The power steering gear weighs approximately 70 pounds and is located in an awkward spot. To prevent personal injury or damage to equipment, use an overhead lifting device and lifting sling to remove power steering gear from MK48. (Page 2-287)

WARNING

Gloves must be worn to protect hands from sharp edges and cuts. To prevent personal injury, be very careful not to get hand(s) caught between power steering gear and any part of MK48 during removal; serious injury to hand(s) could result. (Page 2-290)

SAFETY SUMMARY-CONT

WARNING

Avoid contact with 1,1,1-Trichloroethane, Dry Cleaning Solvent P-D, epoxy paint stripper, alkaline rust and paint remover, and phosphoric acid corrosion remover. If solution comes in contact with the skin, wash thoroughly with running water. Use of rubber gloves conforming to Federal Specification (FED SPEC) ZZ-G-381, face shield conforming to L-F-36, and other protective equipment is required according to OSHA Standards. (Page 2-296)

WARNING

Avoid contact with 1,1,1-Trichloroethane, Dry Cleaning Solvent P-D, epoxy paint stripper, alkaline rust and paint remover, and phosphoric acid corrosion remover. If solution comes in contact with the skin, wash thoroughly with running water. Use of rubber gloves conforming to (FED SPEC) ZZ-G-381, face shield conforming to L-F-36, and other protective equipment is required according to OSHA Standards. (Pages 2-297, 299, 332, 334, 339, and 435)

WARNING

Effluent from chemical cleaning and coating operations is toxic and hazardous. Such operations shall comply with all applicable state and federal environmental regulations including Title 40, Code of Federal Regulations, Protection of the Environment. (Pages 2-296, 301, 332, 334, 339, and 435)

WARNING

Adequate ventilation shall be provided during painting operations. Approved safety equipment to protect eyes and lungs shall be worn by personnel engaged in painting. OSHA Safety and Health Regulations apply. (Pages 2-297, 298, 300, 304, 307, 308, 309, 311, 313, 316, 319, 322, 323, 326, 327, 328, 329, 330, 331, 336, 342, 343, 344, 349, 353, 355, 356, 359, 363, 363.1, 365, 366.2, 367, 368, 369, 370, 373, 374, 375, 377, 378, 379, 380, 381, 382, 383, 387, 388, 389, 390, 391, 393, 394, 395, 396, 397, 398, 399, 400, 401, 402, 403, 404, 405, 406, 407, 409, 410, 411, 412, 413, 414, 415, 416, 417, 418, 419, 420, 421, 422, 423, 424, 425, 426, 427, 428, 429, 430, 431, 433, 437, 439, 440, 440.1, 441, 442, 443, 444, 447, 451, 452, 454, 455, 456, 457, 458, 459, 461, 463, 466, 470, 472, 474, 475, 479, 483, 484, 485, 486, 487, 488, 490, 492, 494, 495, 497, 499, 500, 503, 504, 507, 510, 511, 512, 513, 514, 517, 518, 519, 521, 522, 523, and 524)

SAFETY SUMMARY-CONT

WARNING

To prevent personal injury and possible damage to bearings, do not spin bearings with compressed air. Refer to TM 9-214 for care and maintenance of bearings. (Pages 2-297, 470, 472, 476, and 495)

WARNING

Dry cleaning solvents are flammable. Do not clean parts near an open flame or in a smoking area. Contact with skin may cause irritation or cracking. Use of rubber gloves conforming to FED SPEC ZZ-G-381, face shield conforming to L-F-36, and other protective equipment is required according to OSHA Standards. (Pages 2-298, 300, 326, 327, 328, 343, 344, 347, 353, 389, 390, 391, 392, 394, 396, 398, 399, 400, 401, 407, 409, 411, 412, 426, 427, 430, 435, 442, 444, 451, 452, 461, 466, 470, 472, 475, 481, 484, 495, 507, 510, 511, 512, 513, 514, 515, 518, and 519)

WARNING

To prevent serious personal injury when abrasive blasting with high air pressure (120-150 psi), in open areas or confined areas, personnel shall wear full-body protective equipment conforming to OSHA Standards. (Pages 2-299, 304, 307, 308, 309, 313, 322, 323, 329, 355, 356, 363, 363.1, 365, 366.2, 367, 369, 372, 374, 379, 381, 385, 387, 395, 397, 402, 403, 404, 405, 407, 410, 414, 421, 431, 433, 439, 447, 453, 454, 455, 456, 457, 458, 459, 461, 463, 466, 470, 472, 474, 475, 479, 481, 485, 488, 490, 493, 494, 497, 499, 500, 501, 521, and 524)

WARNING

To prevent personal injury when bead blasting, roto blasting, or tumble blasting, personnel shall wear proper eye, ear, and breathing equipment conforming to OSHA Standards. (Pages 2-299, 406, and 407)

WARNING

When cleaning with compressed air, regulate to 25 psi maximum. Eyeshields must be worn to prevent injury to the eyes or complete loss of sight. (Pages 2-299, 319, 326, 327, 328, 330, 331, 336, 342, 343, 353, 367, 372, 373, 374, 375, 378, 385, 387, 389, 390, 391, 393, 401, 407, 409, 411, 412, 442, 446 451, 470, 472, 476, 484, 499, 507, 510, 511, 512, 513, 514, 517, 518, 519, and 623)

SAFETY SUMMARY-CONT

WARNING

To prevent personal injury when steam cleaning, personnel shall wear proper protective equipment conforming to OSHA Standards. (Pages 2-300, 304, 307, 308, 309, 313, 322, 323, 329, 330, 332, 334, 336, 337, 339, 342, 344, 347, 355, 356, 363, 365, 366.1, 366.3, 369, 370, 374, 379, 380, 383, 386, 395, 397, 402, 403, 404, 405, 406, 410, 414, 421, 431, 433, 434, 439, 447, 453, 454, 455, 456, 457, 458, 459, 461, 463, 466, 470, 472, 474, 475, 479 481, 485, 486, 487, 488, 490, 492, 493, 494, 497, 499, 500, 501, 520, 521, and 523)

WARNING

Avoid contact with epoxy paint remover. If solution comes in contact with the skin, wash thoroughly with running water. Use of rubber gloves conforming to FED SPEC ZZ-G-381, face shield conforming to L-F-36, and other protective equipment is required according to OSHA Standards. (Page 2-300)

WARNING

Avoid contact with phosphate coating compounds, chromium plating compounds, and conversion coating compounds. If solution comes in contact with the skin, wash thoroughly with running water. Use of rubber gloves conforming to FED SPEC ZZ-G-381, face shield conforming to L-F-36, and other protective equipment is required according to OSHA Standards. (Page 2-301)

WARNING

Adequate ventilation shall be provided during painting operations. Approved safety equipment to protect eyes and lungs shall be worn by personnel engaged in painting. OSHA Safety and Health Regulations apply. (Pages 2-302)

WARNING

Do not weld, heat, or braze rim parts that are cracked, bent, broken, or damaged. Repaired parts may not hold up in service. Always replace with new parts of same size and type. (Page 2-308)

WARNING

Exhaust pipe and muffler assembly is very heavy. To prevent personal injury, use a lifting device or help from assistant(s) when disassembling exhaust pipe and muffler assembly. (Page 2-312)

SAFETY SUMMARY-CONT

WARNING

Exhaust pipe and muffler assembly is very heavy. To prevent personal injury, use a lifting device or help from assistant(s) when assembling exhaust pipe and muffler assembly. (Page 2-314)

WARNING

Avoid contact with alkaline paint and rust removers, phosphate coating compounds, 1,1,1-Trichloroethane, and Dry Cleaning Solvent P-D-680. If solution comes in contact with skin, wash thoroughly with running water. Use of rubber gloves conforming to FED SPEC ZZ-G-381, face shield conforming to L-F-36, and other protective equipment is required according to OSHA Standards. (Pages 2-331, 343, 344, 349, 359, 372, 373, 375, 378, 380, 385, 389, 390, 391, 392, 397, 398, 401, and 504)

WARNING

To prevent personal injury from chemical solutions when working with hot cleaning vat, wear appropriate safety equipment as governed by OSHA Standards. (Pages 2-332, 334, 337, and 434)

WARNING

If hot cleaning vat solution, muriatic acid, or flux enters the eyes, wash thoroughly for 15 minutes with clean water and seek medical attention as soon as possible. (Pages 2-332, 334, 339, and 435)

WARNING

Flux, caustic solutions, and cleaning acids can cause skin irritation. Wash immediately with soap and clean water if the skin comes in contact with any of these chemicals. (Pages 2-332, 334, 339, and 435)

WARNING

Adding large amounts of cleaning compound to a hot cleaning vat will cause violent boiling; add small amounts slowly. Never add water to the dry compound; add the compound to the water. (Pages 2-332, 334, 339, and 435)

WARNING

The radiator is very heavy and awkward to handle. To prevent personal injury, use an overhead lifting device or help from assistant(s) to handle radiator during disassembly. (Page 2-337)

SAFETY SUMMARY-CONT

WARNING

The radiator is very heavy and awkward to handle. To prevent personal injury, use an overhead lifting device or help from assistant(s) to handle radiator during assembly. (Page 2-341)

WARNING

Fuel tanks are heavy and awkward to handle. To prevent personal injury, use an overhead lifting device or help from assistant(s) to handle fuel tanks during disassembly and assembly. (Page 2-344)

WARNING

Never use a torch on a fuel tank regardless of how long it has been empty unless the tank has been thoroughly cleaned with steam or rinsed thoroughly with 1,1,1-Trichloroethane, Tech, FED SPEC O-T-620. (Pages 2-346 and 2-349)

WARNING

Plug (1, Figure 2-188) is under spring tension. To prevent personal injury or loss of parts, use care when removing plug (1). (Page 2-350)

WARNING

Plug (23) is under spring tension. To prevent personal injury or loss of parts, use care when removing plug (23). (Page 2-352)

WARNING

Cover (3) is under pressure. To prevent personal injury, remove cover (3) with extreme care. (Page 2-370)

WARNING

To prevent electric shock to personnel, do not wear watches, rings, or other jewelry when working with electrical components. (Pages 2-415 and 2-416)

WARNING

Brake linings contain asbestos. Do not use compressed air to clean brake shoes. (Page 2-478)

SAFETY SUMMARY-CONT

WARNING

To prevent injury or death, never attempt to repair brake chamber before removing it from MK48. (Page 2-489)

WARNING

Do not disturb clamp (1, Figure 2-206) on parking brake side of brake chamber. Clamp (1) secures spring under high tension. Severe injury or death may result if attempts are made to loosen or remove clamp (1). (2-490)

WARNING

To prevent personal injury, never work directly behind brake chamber. (Page 2-490)

WARNING

To prevent personal injury, ensure brake chamber was properly caged during removal. (Page 2-490)

WARNING

Cap (1, Figure 2-210) is under spring pressure. To prevent personal injury, remove cap (1) carefully from demand valve (4). (Page 2-508)

WARNING

The power steering gear weighs approximately 70 pounds and is located in an awkward spot. To prevent personal injury or damage to equipment, use an overhead lifting device and lifting sling to install power steering gear on MK48. (Page 2-527)

WARNING

Gloves must be worn to protect hands from sharp edges and cuts. To prevent personal injury, be very careful not to get hand(s) caught between power steering gear and any part of MK48 during installation; serious injury to hand(s) could result. (Page 2-527)

WARNING

The demand valve is very heavy. To prevent personal injury, have assistant(s) help install demand valve on MK48. (Page 2-535)

WARNING

The spring and seat assembly is very heavy. To prevent personal injury, use an overhead lifting device to install spring and seat assembly. (Page 2-538)

SAFETY SUMMARY-CONT

WARNING

Brake chamber contains a spring under great pressure. To prevent personal injury or death, never work directly behind brake chamber. (Page 2-542)

WARNING

Axle assembly no. 2 is very heavy and difficult to handle. To prevent personal injury, be very careful when installing axle assembly no. 2. (Page 2-543)

WARNING

The axle ball socket assembly is very heavy. To prevent personal injury, ensure axle ball socket assembly is securely positioned on transmission jack before installation. (Page 2-544)

WARNING

The axle shaft assembly is very heavy. To prevent personal injury, have assistant help install axle shaft in axle ball socket assembly. (Page 2-545)

WARNING

The brake drum is very heavy. To prevent personal injury, have assistant(s) help install brake drum on hub. (Page 2-550)

WARNING

Axle assembly no. 1 is very awkward to handle due to the weight of the nose box which causes axle assembly no. 1 to be extremely front-heavy. Use a differential jack that will support the nose box on axle assembly no. 1 and prevent it from falling forward before installation procedures. To prevent possible serious injury to personnel and damage to equipment, be extremely careful when installing axle assembly no. 1. (Page 2-550)

WARNING

The torque rods are heavy. To prevent personal injury, have assistant(s) help when installing torque rods. (Page 2-551)

WARNING

The yaw steering cylinders are very heavy. To prevent personal injury, use an overhead lifting device or help from assistant(s) to install yaw steering cylinders. (Page 2-553)

SAFETY SUMMARY-CONT

WARNING

The transfer case is very heavy. To prevent personal injury, ensure eyebolt will support weight of transfer case. (Page 2-557)

WARNING

To prevent personal injury or damage to equipment, have assistant(s) guide transfer case into position during installation procedures. (Page 2-557)

WARNING

Propeller shafts and universal joints are very heavy. To prevent personal injury, be very careful when installing propeller shafts and universal joints. Use proper lifting equipment and an assistant to aid in handling propeller shafts and universal joints. (Pages 2-558)

WARNING

The Cardan joint is very heavy. To prevent personal injury during installation, use a lifting device or help from assistant(s). (Page 2-559)

WARNING

The pillow block assembly is very heavy. To prevent personal injury, use a lifting device or help from assistant(s) to install pillow block assembly. (Page 2-560)

WARNING

The fenders are heavy and awkward to handle. To prevent personal injury, use an overhead lifting device to install fenders on vehicle. (Page 2-560)

WARNING

The hydraulic pump is very heavy. To prevent personal injury, use a lifting device or help from assistant(s) to install hydraulic pump on mounting bracket. (2-564)

SAFETY SUMMARY-CONT

WARNING

To prevent personal injury, ensure batteries are disconnected and do not wear watches, rings, and other jewelry when working on electrical components. (Pages 2-572, 573, 574, 576, 577, 578, 579, 580, 581, 583, 585, 593, 594, 598, 599, 600, 601, 601.1, 603, 604, 608, and 630.2)

WARNING

The door is heavy and awkward to handle. To prevent personal injury, use an overhead lifting device to install door on hinge. (Page 2-585)

WARNING

The frame 90° gear box is heavy. Have assistant help install frame 90° gear box on mounting plate. (Page 2-585)

WARNING

The cab is very heavy. To prevent personal injury, use proper lifting slings and an overhead lifting device to install cab. (Page 2-588)

WARNING

To prevent personal injury or damage to equipment, assistant(s) may be needed to guide cab on frame assembly in proper position. (Page 2-588)

WARNING

To prevent personal injury, direct personnel to stay clear of cab during installation procedures. (Page 2-604)

WARNING

The hydraulic oil reservoir is very heavy. To prevent personal injury, use lifting device to install hydraulic oil reservoir on vehicle. Direct personnel to stand clear of hydraulic oil reservoir during installation procedures. (Page 2-604)

WARNING

The ether bottle is pressurized. To prevent personal injury, wear eye protection and keep face clear of ether bottle during installation procedures. (Page 2-607)

SAFETY SUMMARY-CONT

WARNING

The air cleaner assembly is very heavy. To prevent personal injury, use a sling and an overhead lifting device to install air cleaner assembly on vehicle. (Page 2-609)

WARNING

To prevent personal injury, direct personal to stay clear of air cleaner assembly during installation procedures. (Page 2-609)

WARNING

The main air reservoirs are heavy and awkward to handle. To prevent personal injury, use an overhead lifting device or help from an assistant to install main air reservoirs. (Page 2-610)

WARNING

The fan motor is very heavy. To prevent personal injury, support fan motor before installation procedures with lifting device or help from assistant(s). (Page 2-611)

WARNING

The fan mount/radiator support is very heavy. To prevent personal injury, use an overhead lifting device to install fan mount/radiator support on vehicle. (Page 2-612)

WARNING

The fuel tanks are very heavy. To prevent personal injury, use an overhead lifting device to install fuel tanks on vehicle. (Page 2-613)

WARNING

To prevent personal injury, direct personnel to stay clear of fuel tanks during installation procedures. (Page 2-613)

WARNING

The radiator is very heavy and awkward to handle. To prevent personal injury, use an overhead lifting device to install radiator on vehicle. Help from assistant(s) may be necessary to guide radiator during installation procedures. (Page 2-615)

WARNING

The transmission oil cooler is very heavy and awkward to handle. To prevent personal injury, use an overhead lifting device to install transmission oil cooler on vehicle. Help from assistant(s) may be necessary to guide transmission oil cooler during installation procedures. (Page 2-617)

SAFETY SUMMARY-CONT

WARNING

The hydraulic oil cooler is very heavy and awkward to handle. To prevent personal injury, use an overhead lifting device to install hydraulic oil cooler on vehicle. Help from assistant(s) may be necessary to guide hydraulic oil cooler during installation procedures. (Page 2-617)

WARNING

To prevent personal injury and possible damage to fittings, use proper size wrench when installing fittings. Be very careful not to cross-thread fittings. (Page 2-618)

WARNING

The radiator grille is very heavy and awkward to handle. To prevent personal injury, use an overhead lifting device to install radiator grille on vehicle. Help from assistant(s) may be necessary to guide radiator grille during installation procedures. (Page 2-620)

WARNING

To prevent personal injury, personnel shall wear leather gloves conforming to MIL-G-822, NSN 8415-00-268-7870 or equivalent when handling spare tire hoist winch cable. (Page 2-623)

WARNING

The spare tire and wheel assembly is very heavy. To prevent personal injury, do not get between spare tire and wheel assembly and vehicle during installation procedures. (Page 2-624)

WARNING

To prevent personal injury, use an overhead lifting device to install spare tire and wheel assembly on vehicle. (Page 2-624)

WARNING

The exhaust pipe and muffler assembly is very heavy. To prevent personal injury, use two slings, if necessary, and an overhead lifting device to install exhaust pipe and muffler assembly. (Page 2-627)

WARNING

The skid plate frame is very heavy. To prevent serious personal injury or death, use an overhead lifting device to install skid plate frame on vehicle. (Page 2-628)

SAFETY SUMMARY-CONT

WARNING

The skid plate is very heavy. To prevent serious personal injury or death, use an overhead lifting device to install skid plate on vehicle. (Page 2-629)

WARNING

The MK48 is extremely heavy. To prevent personal injury, be extremely careful when removing the MK48 from the jack stands. Use an overhead lifting device or a floor jack capable of lifting the MK48 to remove it from the jack stands. (Page 2-629)

WARNING

To prevent personal injury, direct personnel to stay clear of MK48 during removal from jack stands. (Page 2-630)

WARNING

When connecting battery cables, always connect ground cables last. When disconnecting battery cables, always disconnect ground cables first. (Page 630.2)

WARNING

Block wheels to prevent personal injury. (Pages 2-636 and 2-638)

WARNING

Be extremely careful not to damage cooling fins when removing hydraulic oil cooler. (Page 2-54)

WARNING

Be extremely careful not to damage cooling fins when removing transmission oil cooler. (Page 2-54)

WARNING

Be extremely careful not to damage cooling fins when removing radiator. (Page 2-61)

WARNING

Use care not to damage weather stripping with flat edged tool when pulling seam outward. (Page 2-196)

WARNING

Note location of flat washer (12) between capscrew (10) and yaw bell crank assembly (6) to ensure proper attachment of bell crank to casting. (Page 2-229)

SAFETY SUMMARY-CONT

CAUTION

To prevent damage to skein during removal, pull skein straight off axle ball socket assembly using a puller. (Page 2-251)

CAUTION

Do not heat, pound on, or weld the pitman arm. Any of these could cause the pitman arm to fail in service. (Page 2-287)

CAUTION

Circulating air drying ovens may have uncalibrated dials or controls for setting the oven temperature. These ovens shall be calibrated so the 120 °F temperature setting is red lined on the dial or control. (Page 2-296)

CAUTION

Cleaning solvents may react with some encapsulants or plastics used for wire harness tubing, wire coatings, conformal coatings, gaskets, seals, et cetera (etc). Test on small area for softening or other adverse reactions prior to general application. (Page 2-297)

CAUTION

Aluminum parts are rapidly attacked by alkaline cleaners. Examine parts carefully to ensure that aluminum components are not immersed in alkaline cleaners. (Page 2-299)

CAUTION

To prevent water or abrasives from entering the muffler when steam cleaning or abrasive blasting, seal the inlet and outlet pipes on muffler. (Page 2-313)

CAUTION

To prevent damage to spring brake valve (6, Figure 2-20), seal all holes to keep solvent from entering the spring brake valve (6). Clean externally only. (Page 2-327)

CAUTION

When repairing damaged threads, take necessary care to ensure metal shavings do not get inside spring brake valve. Damage or malfunction of the spring brake valve could result. (Page 2-328)

CAUTION

To prevent damage to quick release valve (2, Figure 2-21), seal inlet and outlet holes to keep solvent from entering the quick release valve. Clean externally only. (Page 2-328)

SAFETY SUMMARY-CONT

CAUTION

When repairing damaged threads, take necessary care to ensure metal shavings do not get inside quick release valve. Damage or malfunction of the quick release valve could result. (Page 2-329)

CAUTION

Be extremely careful not to damage cooling fins when handling radiator during disassembly. (Page 2-337)

CAUTION

To prevent contamination of fuel, do not coat first two threads of any fitting with pipe sealant. (Pages 2-346 and 2-350)

CAUTION

To prevent contamination of hydraulic oil, do not coat first two threads of any fitting with pipe sealant. (Page 2-373)

CAUTION

To prevent parts damage, do not disturb adjusting screw (1, Figure 2-193) or nut (2). (Page 2-375)

CAUTION

To prevent damage to bearings (9 and 12), remove by pressing against outer bearing shell only. (Page 2-383)

CAUTION

To prevent damage to bearings (9 and 12) during instaliation, press only against the outer bearing shell. (Page 2-386)

CAUTION

To prevent damage to roof vent (4, Figure 2-80), do not abrasive blast. (Page 2-405)

CAUTION

To prevent damage to trailer air supply valve, plug all openings before cleaning with solvent. (Page 2-423)

SAFETY SUMMARY-CONT

CAUTION

To prevent damage to parking brake valve, plug all openings before cleaning. (Page 2-423)

CAUTION

To prevent damage to drive line lockup switch, plug all openings before cleaning with solvent. (Page 2-425)

CAUTION

To prevent damage to windshield wiper motor, plug all openings before cleaning with solvent. (Page 2-426)

CAUTION

To prevent damage to windshield wiper control valve (3, Figure 2-111), plug all openings before cleaning with solvent. (Page 2-427)

CAUTION

To prevent damage to windshield washer control valve, plug all openings before cleaning with solvent. (Page 2-428)

CAUTION

To prevent damage to heater core, do not subject it to high pressure. Maintain flushing pressure under 8 psi. (Page 2-435)

CAUTION

To prevent water or abrasive particles from entering accumulator tank, plug all openings before cleaning. (Page 2-447)

CAUTION

To prevent parts damage, do not disturb settings of nut (1, Figure 2-200) and adjustment screw (2). (Page 2-449)

CAUTION

To prevent damage to pillow block bearing, plug all openings before steam cleaning, abrasive blasting, and painting. (Page 2-459)

CAUTION

To prevent damage to internal surface of fuse link assembly from abrasive particles, plug all openings before abrasive blasting. (Page 2-466)

SAFETY SUMMARY-CONT

CAUTION

Note location of locking capscrews (15), nuts (16), and clamps (17) when disassembling. Improper assembly of clamps, capscrews, and nuts could cause interference causing equipment damage or impaired steering. (Page 2-468)

CAUTION

To prevent damage to bearing cup surface in bell crank arm, plug openings before abrasive blasting. (Page 2-470)

CAUTION

To prevent damage to rubber support, do not direct abrasive particles at rubber support when blasting. (Page 2-474)

CAUTION

If brake shoes and linings are being replaced on one end of axle, replace all brake shoes and linings on that axle. Mixing old and new brake shoes and linings will cause uneven braking. (Pages 2-478, 2-540, and 548)

CAUTION

Do not attempt to use rivets more than one size over original. If this is not possible, discard brake shoe. (Pages 2-479 and 2-499)

CAUTION

Left tie rod end has left-hand threads and right tie rod end has right-hand threads. To prevent damage to tie rod and tie rod ends, do not switch tie rod ends in tie rod. (Page 2-488)

CAUTION

To prevent damage to equipment, accelerated wear on front tires, and to ensure tie rod end (3) is secured properly in tie rod (5), threads of tie rod end (3) must extend beyond slot in tie rod (5). (Page 2-489)

CAUTION

To prevent uneven braking, all brake shoes and linings on an axle shall be repaired at the same time. (Page 2-496)

CAUTION

To prevent parts damage, do not disturb setting of nut (5) or adjusting needle (6). (Page 2-505)

SAFETY SUMMARY-CONT

CAUTION

Spring (8), stop pin (9), and spool (10) may fall out when plug (11) is removed. To prevent damage to spring (8), stop pin (9), and spool (10) use care when removing plug (11). (Page 2-505)

CAUTION

To prevent damage to check valve, plug all openings before cleaning with solvent. (Page 2-519)

CAUTION

Be very careful not to over tighten fittings and check valves using O-ring seals. Over tightening will result in damage to O-ring and could cause hydraulic fluid leakage. (Pages 2-527, 534, 535, and 563)

CAUTION

To prevent parts damage, ensure hardware on top of quick buildup air reservoir clears all framework. (Page 2-537)

CAUTION

Do not install old seals, bushings, C-clip, or cotter pin if removed. Replace with new parts. (Page 2-539)

CAUTION

Do not allow oil or grease to get on brake linings or drum. Braking capability will be greatly reduced. (Pages 2-540 and 2-548)

CAUTION

To prevent brake failure, discard springs (6 and 7, Figure 2-158) if stretched, distorted, or show any wear on hook ends and install new springs (6 and 7). (Page 2-540)

CAUTION

To prevent damage to wheel bearings, pack wheel bearings with Grease, Aircraft, General Purpose, Wide Temperature Range, MIL-G-81322, NSN 9150-00-935-5851 or equivalent prior to installation. (Page 2-541)

CAUTION

Do not damage oil seal when installing hub on skein. (Pages 2-541 and 2-549)

SAFETY SUMMARY-CONT

CAUTION

Use at least three washers (12) for each stud (3) for seating of skein (9). Less than three washers could result in stripping threads on studs (3). (Page 2-545)

CAUTION

LVS brake shoes on trucks with serial numbers 37141 and above will have asbestos and nonasbestos brake linings. When replacing brake linings on axle, ensure all replacement linings on both ends of axle are all asbestos or all nonasbestos. Mixing different types of linings will cause uneven braking. (Page 2-548)

CAUTION

Adjustment of wheel bearing nut (9) is very important. It must be tight enough to eliminate end play in hub, but not tight enough to cause excessive drag. (Page 2-550)

CAUTION

To prevent pipe sealant from entering air system, do not apply to first thread of fittings. (Page 2-550)

CAUTION

Adjustment of nut (6) is very important. It must be tight enough to eliminate end play, but not tight enough to cause binding. (Page 2-554)

CAUTION

To avoid parts damage, ensure companion flanges (1) do not bind on articulation joint. Move single center support bearing (6) to prevent binding. (Page 2-559)

CAUTION

To prevent damage to new coolant filter, do not overtighten it. Tighten coolant filter only by hand. (Page 2-562)

CAUTION

Be extremely careful not to damage heater core cooling fins during installation procedure. (Page 2-567)

SAFETY SUMMARY-CONT

CAUTION

Be careful not to cross thread cannon plug when installing on back of master light switch. (Page 2-569)

CAUTION

To prevent leaks, transmission oil filter (8) must be tightened one full turn after contacting transmission oil filter adapter (11). Disregard any conflicting instructions printed on replacement transmission oil filter (8). (Page 2-603)

CAUTION

To prevent damage to sending unit (9), do not tighten it over 15 ft-lb (20.34 N.m). (Page 2-605)

CAUTION

To prevent personal injury and possible damage to parts, use proper size wrench when installing fuel lines, vent lines, check valves, and fittings. (Page 2-614)

CAUTION

Be extremely careful not to damage cooling fins when installing radiator. (Page 2-615)

CAUTION

Be extremely careful not to damage cooling fins when installing transmission oil cooler. (Page 2-617)

CAUTION

Be extremely careful not to damage cooling fins when installing hydraulic oil cooler. (Page 2-618)

CAUTION

To prevent hydraulic system failure, use only replacement hoses with the same inside diameters, pressure ratings, lengths, and fittings. (Page 2-618)

CAUTION

To prevent sealant from contaminating fuel system, do not apply sealant to first thread on fittings. (Page 2-625)

CAUTION

To prevent parts damage, do not over tighten adjusting screw (4). (Page 2-633)

SAFETY SUMMARY-CONT

CAUTION

To prevent parts damage, do not turn steering wheel in either direction while testing and adjusting. (Page 2-636)

CAUTION

To prevent equipment damage, do not disturb setting of adjusting screw (4) when tightening jamnut (3). (Page 2-636)

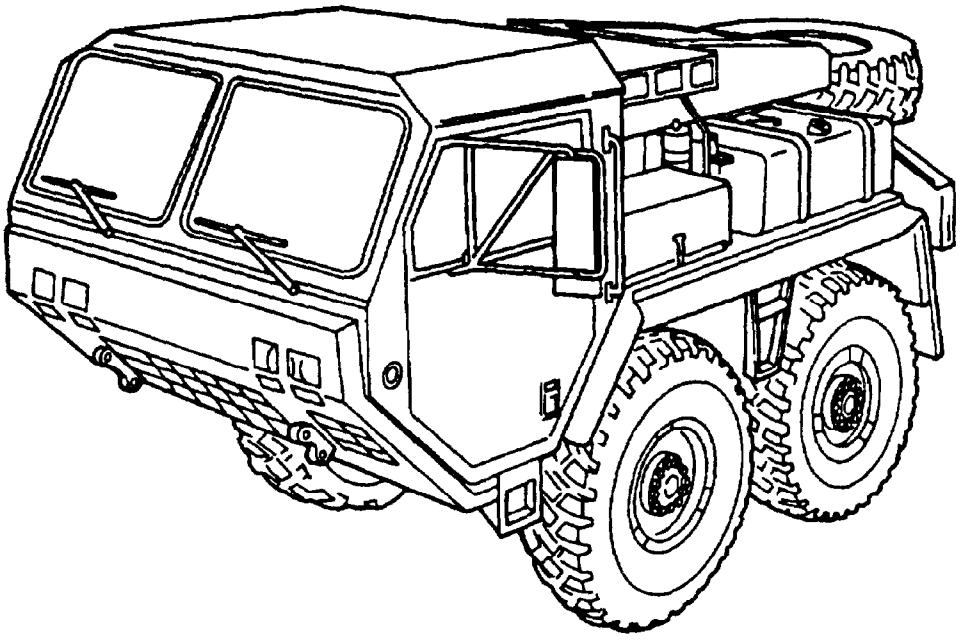

LEFT FRONT VIEW

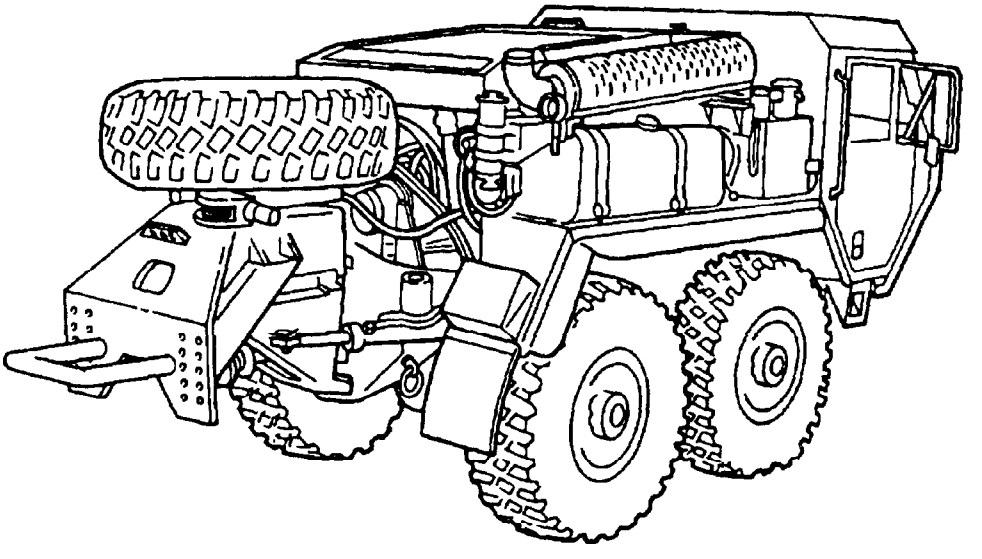

RIGHT REAR VIEW

Figure 1-1. Power Unit, Front, 12-1/2 Ton, 4x4, MK48, Mod 0

CHAPTER 1

INTRODUCTION

SECTION I. SCOPE, PURPOSE, AND OVERHAUL REQUIREMENTS

1-1. SCOPE. This Depot Maintenance Manual (DMM), according to Marine Corps Order (MCO) P5215.17, provides fifth echelon maintenance, overhaul, and Inspect, Repair Only As Necessary (IROAN) procedures for the Logistics Vehicle System (LVS) Power Unit, Front, 12 1/2-Ton, 4x4, MK48, Modification (Mod) 0 and the Logistics Vehicle System (LVS) Power Unit, Front, 12 1/2-Ton, 4x4, MK48A1, Modification (Mod) 0 (Figure 1-1). Chapter 1 acquaints the user with the MK48 and MK48A1, its function, and the extent of work necessary for complete overhaul. Refer to Appendix D for extent of work necessary for IROAN repair. Information is provided to enable the user to plan the required depot maintenance operations detailed in the subsequent Chapter.

1-2. PURPOSE. The purpose of this DMM is to provide planning data and instructional procedures for restoring the MK48 and MK48A1 to a standard which approximates the original or new condition in appearance, performance, and life expectancy. The information contained in this document provides procedures for disassembly, cleaning, inspection, repair, assembly, necessary testing, and IROAN repair of operating components and basic structure. This DMM is used to determine and accomplish the overhaul, repair, replacement, servicing, and necessary testing required to restore the MK48 and MK48A1 to a serviceable condition.

1-3. QUALITY ASSURANCE PROVISIONS. Unless otherwise specified in the contract, the contractor shall be responsible for the performance and establishment of all inspection requirements as specified. Except as otherwise specified in the contract, the contractor may use his own or any other facilities suitable for the performance of the inspection requirements specified herein. The Government reserves the right to perform any inspection deemed necessary to ensure supplies and services conform to the requirements specified.

1-4. OVERHAUL REQUIREMENTS. Overhaul of the MK48 and MK48A1 shall be accomplished by the application of depot level maintenance techniques by experienced journeyman level personnel to meet quality standards and inspection criteria contained in this DMM. Figure 1-2 is the recommended production process flow chart for overhaul. This DMM includes procedures to accomplish the overhaul process which will proceed generally as follows:

a. Disassemble the MK48 or MK48A1 only to extent necessary to effect repairs, overhaul, replacement, and restoration as described in the subsequent Chapter of this DMM.

b. Inspect all parts and components as provided for each item in Chapter 2.

c. Repair or replace all parts or components that are beyond the specified tolerances and wear limits, or that are unserviceable. Parts and components may be reused if they meet the criteria established in this DMM.

d. Reassemble, perform operational tests, inspect, paint, and preserve the MK48 and MK48A1.

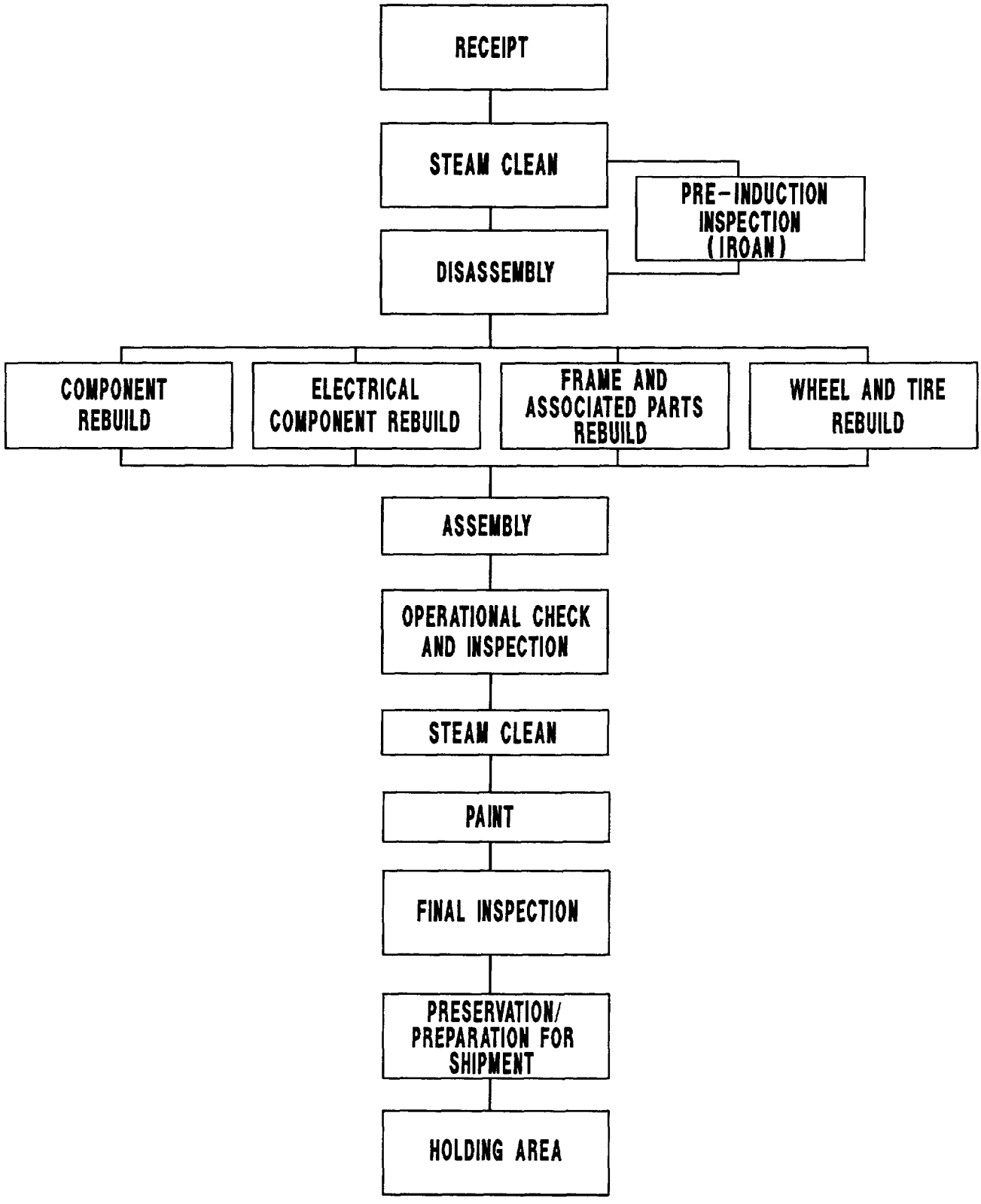

Figure 1-2. Recommended Production Process Flow Chart

Section II. DESCRIPTION

1-5. FUNCTIONAL DESCRIPTION. The Power Unit, Front, 12-1/2 Ton, MK48, Mod 0 is a high mobility artificial front power unit, equipped with a 445-horsepower (hp) engine, a four-speed automatic transmission, a two-speed transfer case with bevel-gear differential and lockup, and heavy-duty tandem axles with a driver-controlled traction differential in each axle. It is a low-profile, cab-forward configuration which requires no cab preparations for loading on military transport aircraft. The cab is an all-metal construction with gun port and seating for a crew of two. The MK48 contains all power train components and is the primary source of power for the LVS. The MK48's primary mission is to transport International Organization for Standardization/American National Standards Institute (ISO/ANSI) containers, standardized cargo, shelters, and functional modules from beach sites to unit supply points. The MK48's capabilities and features are as follows:

a. Capabilities

(1) Operating in temperatures from minus (-) 25 to plus (+) 125 degrees Fahrenheit (°F) (-32 to +52 degrees Celsius (°C))

(2) Fording water up to 60 inches (in) (152.4 centimeters (cm)) deep

(3) Climbing and descending 60 percent grades with a gross vehicle weight of 64,000 pounds (lb) (29,056 kilograms (kg))

(4) Operating on 30 percent side slopes and parking on 20 percent grades

(5) Articulation and roll between front power unit and trailer, enabling vehicle to maintain ground contact with all eight wheels even on rough terrain

(6) Pulling an additional MK14, MK15, MK16, MK17, or MK18 using a rear body tow unit

(7) Operating for a maximum range of 300 miles (482.7 kilometers (km)) depending on vehicle load, type of terrain, idling time, and fuel quantity

(8) Being airlifted by CH53E helicopter or transported by C-141 or C-5A type aircraft with minimal preparation

(9) Being transported by highway, rail, or sea

(10) Being separated for ease of handling

(11) Turning within a radius of 38.5 feet (ft) (11.7 meters (m))

(12) Carrying a payload of 45,000 lb (20,430 kg) off road and 25,000 lb (11,350 kg) on road

b. Features

(1) The MK48 can be separated from one trailer and coupled with any of the other four trailers

(2) Incorporated within the MK48/MK48A1 electrical system is a test connector that allows the use of Simplified Test Equipment for Internal Combustion Engines (STE/ICE) equipment which helps maintenance personnel find problems within the engine, electrical system, and hydraulic system.

(3) The MK48/MK48A1 has a hand priming pump that allows priming of the fuel system after it has run dry.

(4) The MK48/MK48A1 has the ability, through the use of the two yaw steering cylinders, to turn while the trailer remains still.

1-6. DATA PLATES AND PLACARDS-STAMPING, LOCATION, AND DESCRIPTION

a. Stamping. When stamping data plates and placards, include contract number, total operating time since new (if applicable), and the initials of the facility performing the overhaul or modification. Use letter and figure sizes as directed by Military Specification (MIL)-P-15024. Stamp the data in the area next to the manufacturer's data. Use Arabic numerals except when Roman numerals are used for type designation in military specifications and standards. When sufficient space is not available on the existing data plate to add information, replace the plate and transfer all pertinent data to the new plate. Data shall not be stamped directly on any part, assembly, or items of equipment except when approved by the Government.

b. Location. Refer to Figure 1-3 (MK48) or Figure 1-3.1 (MK48A1).

c. Description. Refer to Table 1-1 (MK48) or Table 1-1.1 (MK48A1).

TABLE 1-1. MK48 DATA PLATE AND PLACARD DESCRIPTIONS

Item No.	Description	NSN	Part No.	Qty.
1.	Data Plate, Shipping	9905-01-234-0119	1467090	1
2.	Plate, Caution	9905-01-234-5130	1388020	2
3.	Nameplate	9905-01-234-0118	1468230	1
4.	Plate, Parts Data	9905-01-234-5128	1468220	1
5.	Plate, Certification	9905-01-235-4149	1468190	1
6.	Label, Environmental Protection Agency (E.P.A.) Noise	9905-01-155-8333	69689AX	1
7.	Plate, Data, Tire Pressure	9905-01-234-5127	1468210	1
8.	Plate, Data, Selector Valve	9905-01-234-2929	1462900	1
9.	Plate, Caution	9905-01-234-0120	1390410	2
10.	Plate, Serial Number (No.)	9905-01-234-2923	65969AX	1

Table 1-1.1. MK48A1 Data Plate and Placard Descriptions

Item No.	Description	NSN	Part No.	Qty.
1.	Data Plate, Shipping	9905-01-234-0119	2234210	1
2.	Plate, Caution	9905-01-234-5130	1390410	2
3.	Nameplate	9905-01-234-0118	2234340	1
4.	Plate, Parts Data	9905-01-234-5128	1468220	1
5.	Plate, Certification	9905-01-235-4149	2234330	1
6.	Decal, Environmental Protection Agency (E.P.A.) Noise	9905-01-155-8333	1634450	1
7.	Plate, Data, Tire Pressure	9905-01-234-5127	1468210	1
8.	Plate, Data, Selector Valve	9905-01-234-2929	2234080	1
9.	Plate, Caution	9905-01-234-0120	1390410	2
10.	Plate, Serial Number (No.)	9905-01-234-2923	65969AX	1
11.	Identification (ID) Plate, Drive Link Lock	9905-01-233-8888	1322350	1
12.	ID Plate, Trailer Brake	9905-01-234-2922	1322320	1
13.	Label, Shift Pattern	9905-01-233-8890	126038A	1
14.	ID Plate, Transfer Case	9905-01-233-8889	1322340	1
15.	Plate, Lockup Instruction	9905-01-234-2928	1405600	1
16.	ID Plate, Engine Brake	9905-01-236-3017	1322290	1
17.	Plate, Caution, Slide Slope	9905-01-234-0122	1405590	1
18.	Plate, Warning	9905-01-234-2927	1324970	1
19.	ID Plate, Transmission Oil Temperature	9905-01-234-5129	1322280	1
20.	Plate, Warning	9905-01-234-0121	1390420	1
21.	ID Plate, Low Air Pressure	9905-01-236-3019	1322330	1
22.	ID Plate, Cold Weather Start	9905-01-234-1164	1322300	1
23.	ID Plate, Engine Stop	9905-01-233-8887	1322270	1

Table 1-1.1. MK48A1 Data Plate and Placard Descriptions (CONT)

Item No.	Description	NSN	Part No.	Qty.
24.	Decal, Engine On-Off	7690-01-245-7931	1359780	1
25.	ID Plate	9905-01-234-2921	1388000	1
26.	Decal, Rustproofing	7690-01-245-7938	3044084	1
27.	Plate, Warning, Hydraulic Steering	9905-01-246-6656	1504930	1
28.	Plate, Warning, Lockout Strut	N/A	1430540	1
29.	Plate, Warning, Fan Clearance	N/A	1448500	1
30.	Plate, Danger, Tire/Hinge Clearance	N/A	125782A	1
31.	Plate, ENG/TRANS OIL	N/A	2010860	1
32.	Decal, Warning, Hearing Protection Required	N/A	2072540	1

Table 1-1. MK48 Data Plate and Placard Descriptions-Continued (CONT)

Item No.	Description	NSN	Part No.	Qty.
11.	Identification (ID) Plate, Drive Line Lock	9905-01-233-8888	1322350	1
12.	ID Plate, Trailer Brake	9905-01-234-2922	1322320	1
13.	Label, Shift Pattern	9905-01-233-8890	126038A	1
14.	ID Plate, Transfer Case	9905-01-233-8889	1322340	1
15.	Plate, Lockup Instruction	9905-01-234-2928	1405600	1
16.	ID Plate, Engine Brake	9905-01-236-3017	1322290	1
17.	Plate, Caution, Side Slope	9905-01-234-0122	1405590	1
18.	Plate, Warning	9905-01-234-2927	1324970	1
19.	ID Plate, Transmission Oil Temperature	9905-01-234-5129	1322280	1
20.	Plate, Warning	9905-01-234-0121	1390420	1
21.	ID Plate, Low Air Pressure	9905-01-236-3019	1322330	1
22.	ID Plate, Cold Weather Start	9905-01-234-1164	1322300	1
23.	ID Plate, Engine Stop	9905-01-233-8887	1322270	1
24.	Decal, Engine On-Off	7690-01-245-7931	1359780	1
25.	ID Plate	9905-01-234-2921	1388000	1
26.	Decal, Rustproofing	7690-01-245-7938	1497680	1
27.	Plate, Warning, Hydraulic Steering	9905-01-246-6656	1504930	1
28.	Plate, Warning, Lockout Strut	N/A	N/A	1

1-7. TECHNICAL DESCRIPTION. Refer to Table 1-2 for a description of the technical characteristics of the MK48.

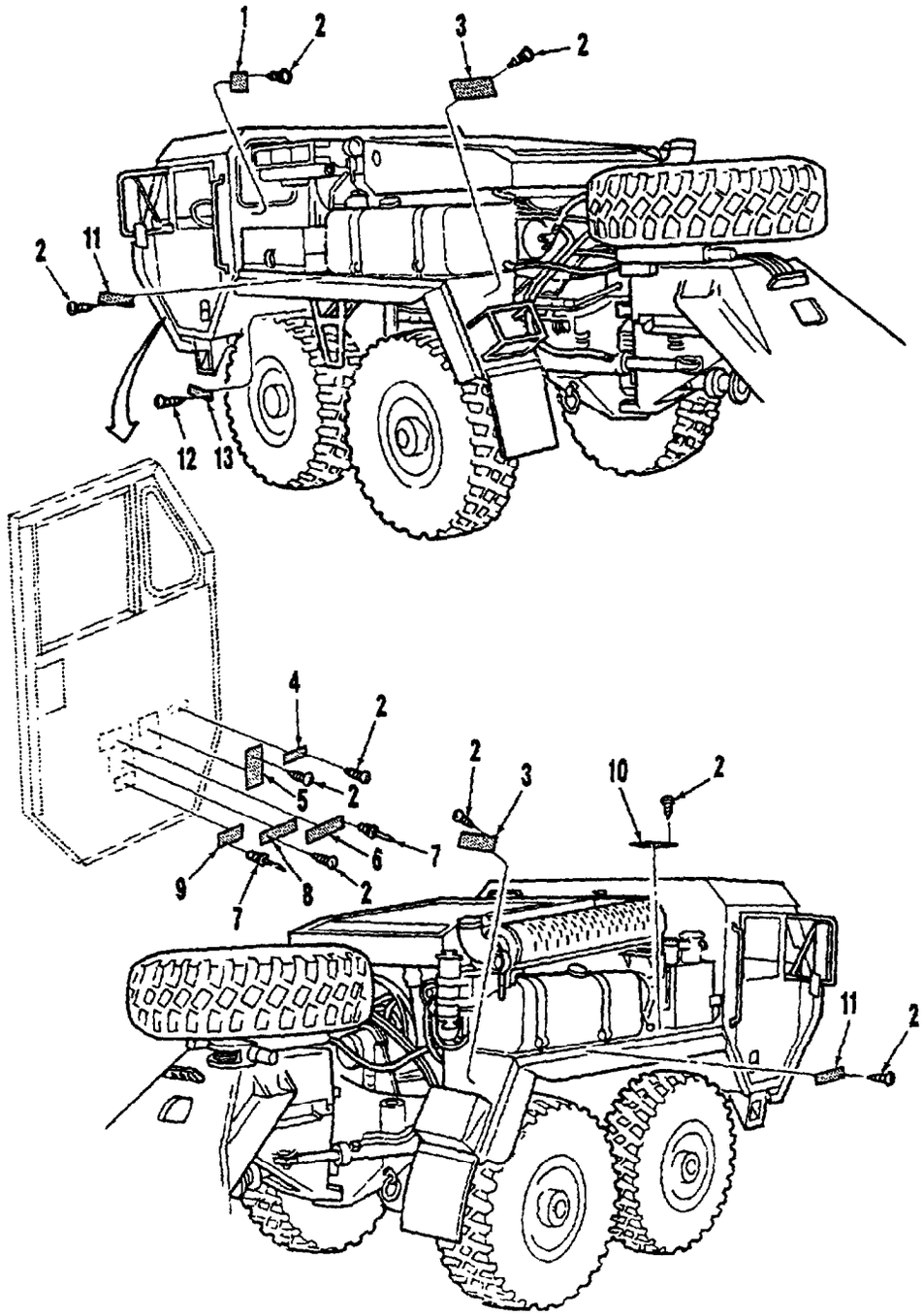

1. Data Plate, Shipping
2. Screw, Tapping
3. Plate, Caution
4. Nameplate
5. Plate, Parts Data
6. Plate, Certification
7. Rivet, Pop
8. Label, E.P.A. Noise
9. Plate, Data, Tire Pressure
10. Plate, Data, Selector Valve
11. Plate, Caution
12. Screw, Drive
13. Plate, Serial No.

Figure 1-3. Data Plate and Placard Location
(Sheet 1 of 2)

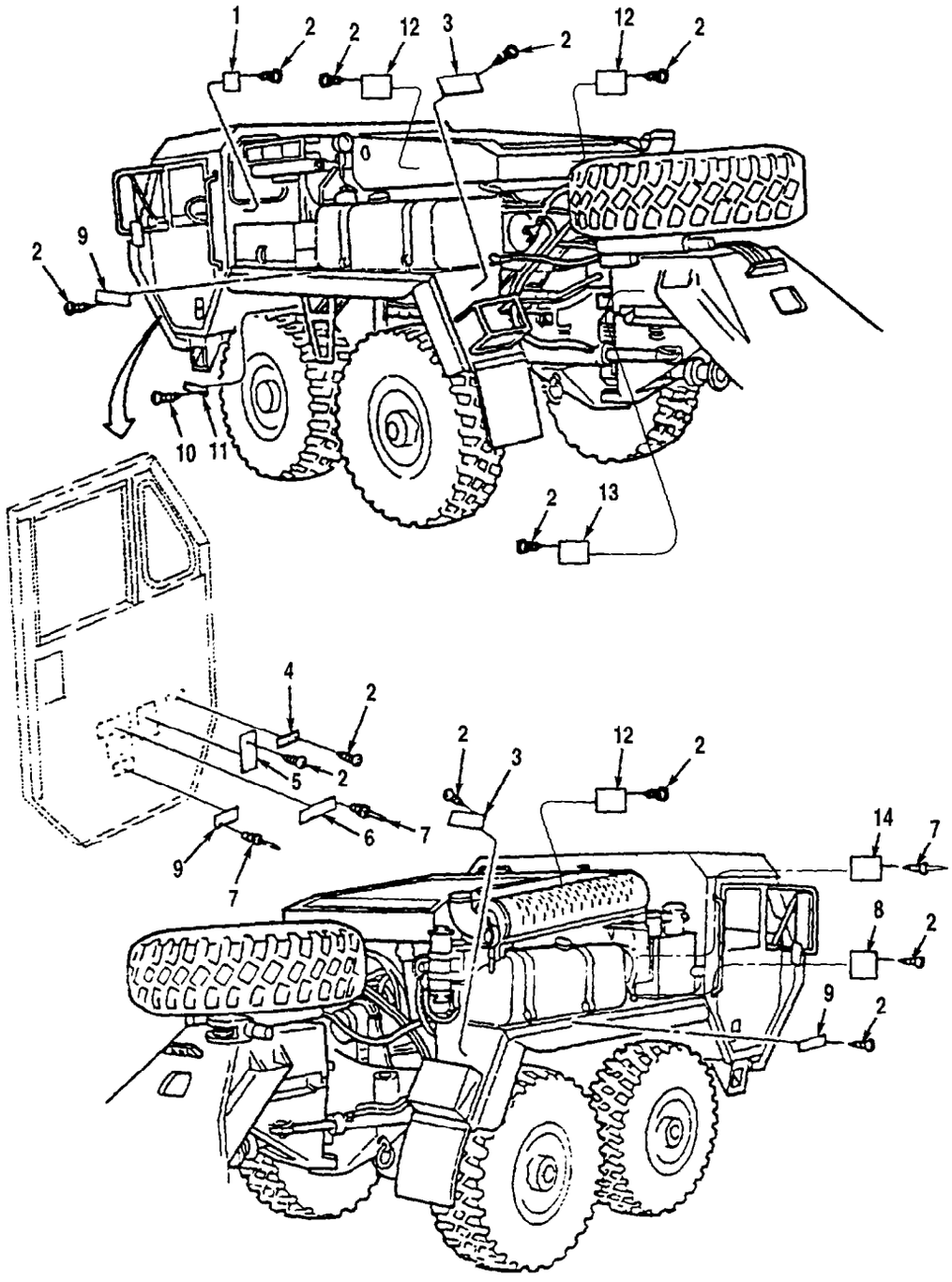

1. Data Plate, Shipping
2. Screw, Tapping
3. Plate, Caution
4. Nameplate
5. Plate, Parts Data
6. Plate, Certification
7. Rivet, Pop
8. Plate, Data, Selector Valve
9. Plate, Caution
10. Screw, Drive
11. Plate, Serial No.
12. Plate, Warning, Fan Clearance
13. Plate, Danger, Tire/Hinge Clearance
14. Plate, Eng/Trans Oil

Figure 1-3.1. Data Plate and Placard Location (LVSA1 Series Vehicles Only) (Sheet 1 of 2)

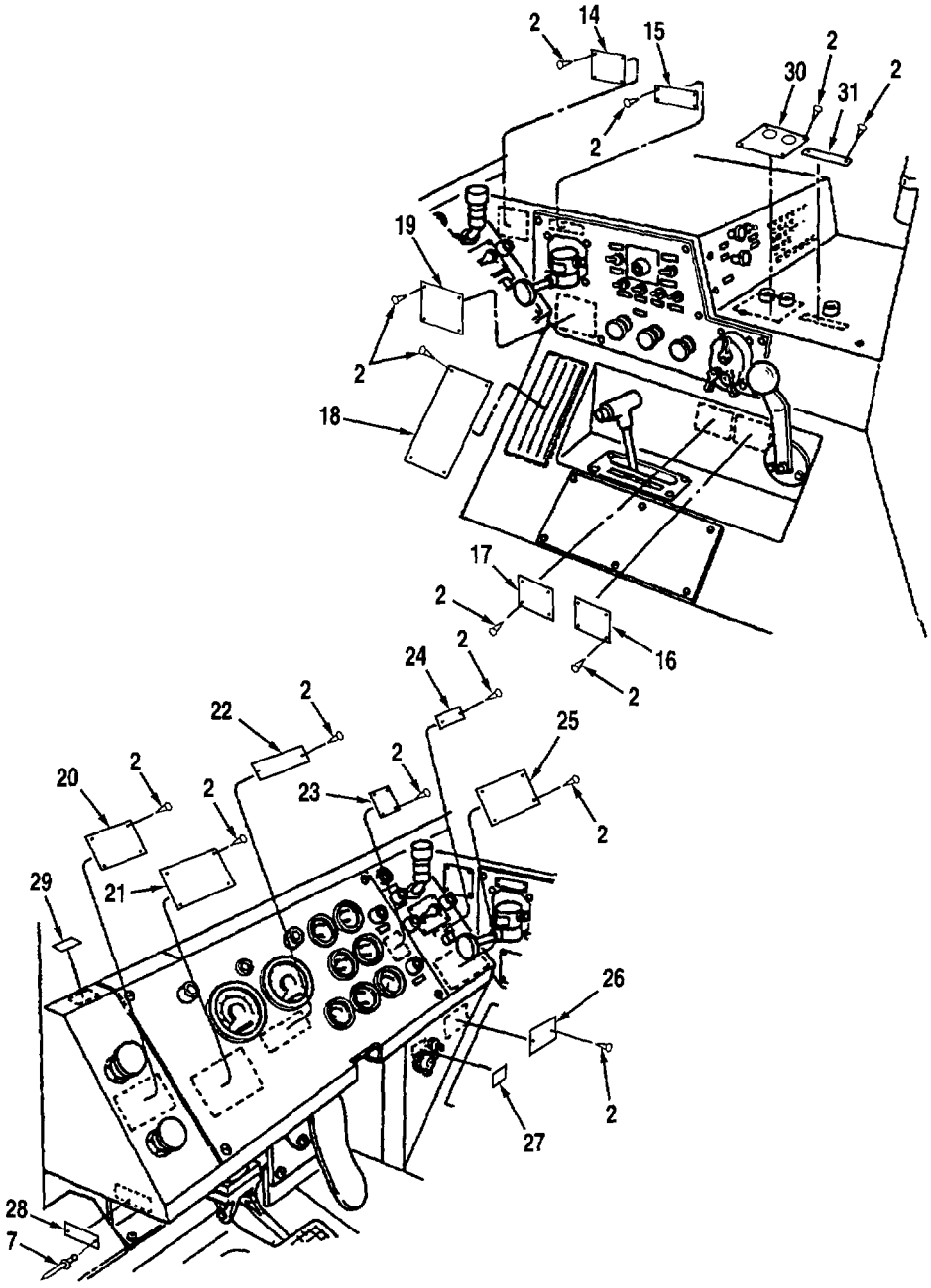

14. ID Plate Line Lock
15. ID Plate, Trailer Brake
16. Label, Shift Pattern
17. ID Plate, Transfer Case
18. Plate, Lockup Instruction
19. ID Plate, Engine Brake
20. Plate, Caution, Slide Slope
21. Plate, Warning
22. ID Plate, Transmission Oil Temperature
23. Plate, Warning
24. ID Plate, Low Air Pressure
25. ID Plate, Cold Weather Start
26. ID Plate, Engine Stop
27. Decal, Engine On-Off
28. ID Plate
29. Decal, Rustproofing
30. Plate, Warning, Hydraulic (Hyd) Steer
31. Plate, Warning, Lockout Strut

Figure 1-3. Data Plate and Placard Location
(Sheet 2 of 2)

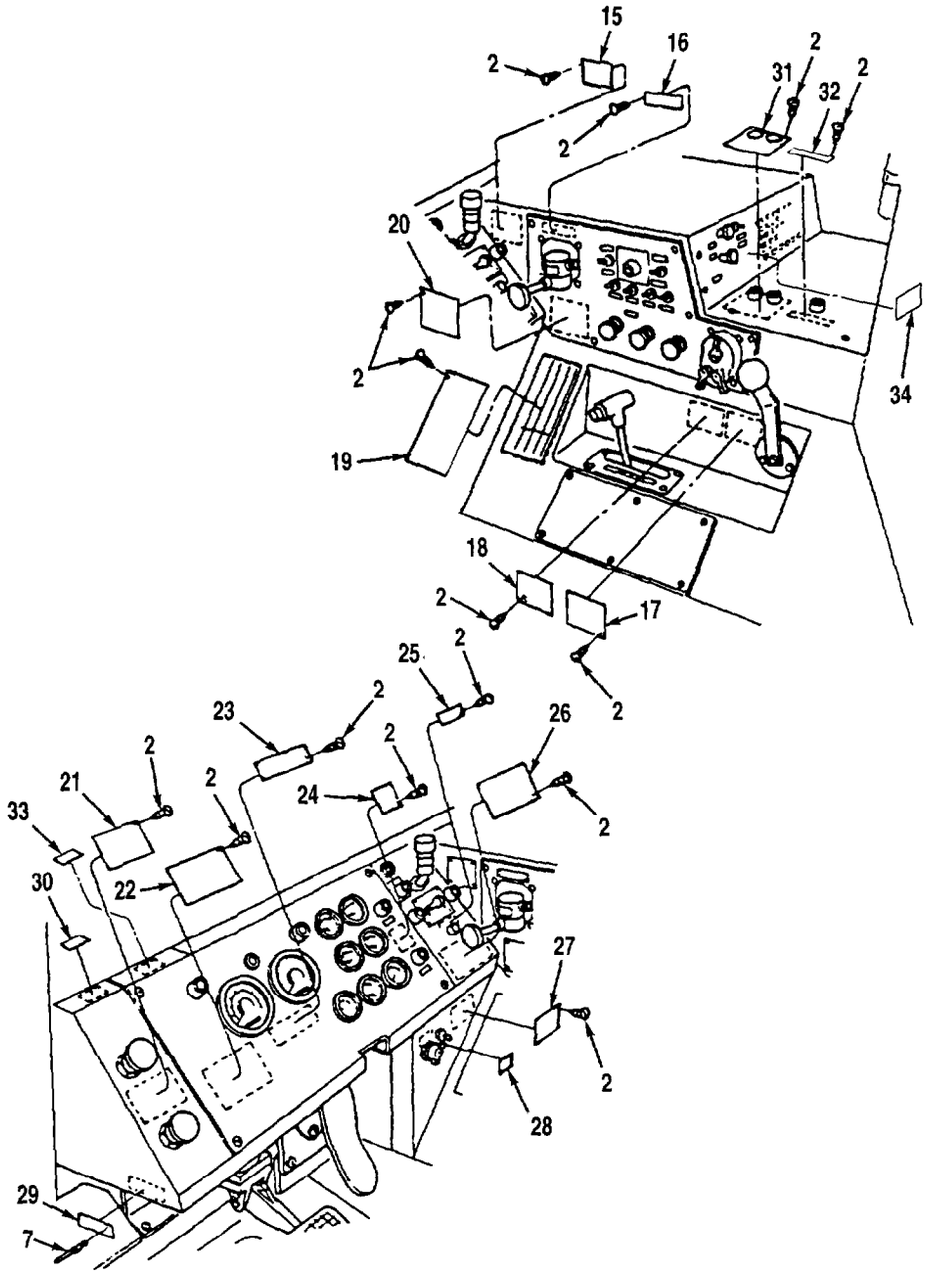

15. ID Plate, Drive Line Lock
16. ID Plate, Trailer Brake
17. Label, Shift Pattern
18. ID Plate, Transfer Case
19. Plate, Lockup Instruction
20. ID Plate, Engine Brake
21. Plate, Caution, Slide Slope
22. Plate, Warning
23. ID Plate, Transmission Oil Temperature
24. Plate, Warning
25. Plate, Warning
26. ID Plate, Cold Weather Start
27. ID Plate, Engine Stop
28. Decal, Engine On-Off
29. ID Plate
30. Decal, Rustproofing
31. Plate, Warning, Hydraulic (Hyd) Steer
32. Plate, Warning, Lockout Strut
33. Decal, EPA Sound, Exemption
34. Decal, Warning, Hearing Protection

Figure 1-3.1. Data Plate and Placard Location (LVSA1 Series Vehicles Only) (Sheet 2 of 2)

Table 1-2. MK48 Technical Characteristics

Item No.	Characteristics	Data
1.	Engine	
	a. Make	Detroit Diesel, 8V92TA
	b. Type	Diesel, Turbocharged, Blown Liquid Cooled
	c. Brake Horsepower	445 @ 2100 Revolutions Per Minute (rpm)
	d. Idle Speed	690 + or - 50 rpm
	e. Oil Pressure	5 to 70 Pounds Per Square Inch (psi) (34.4 to 482.6 kilopascals (kPa))
	f. Water Temperature	160 to 197 °F (71 to 91.6 °C)
	g. Governed Speed	2100 rpm
2.	Cooling System	
	a. Radiator Type	Heavy-Duty Horizontal
	b. Make	General Radiator, Incorporated (Inc.)
	Make*	G & O Radiator, Incorporated (Inc.)*
3.	Fuel System	
	a. Fuel Tanks	Two (One Each Side)
	b. Capacity	75 Gallons Each
4.	Air Cleaner	
	a. Make	Farr
	b. Model	T-528
	c. Type	Two-Stage
5.	Transmission	
	a. Make	Detroit Diesel Allison
	b. Model	HT 740D
	c. Type	Four-Speed Automatic
	d. Oil Temperature	160 to 200 °F (71 to 104 °C)

* LVSA1 Series Vehicles Only

Table 1-2. MK48 Technical Characteristics-CONT

Item No.	Characteristics	Data
6.	Transfer Case	
	a. Make	Oshkosh Truck Corporation
	b. Model	DA100
	c. Type	Two-Speed
	d. Location	Behind Transmission
7.	Axles	
	a. No. 1	
	(1) Make	Eaton
	(2) Model	DS-381P
	(3) Type	Single Tandem Reduction
	b. No. 2	
	(1) Make	Eaton
	(2) Model	RS-381
	(3) Type	Single Tandem Reduction
8.	Shock Absorbers	
	a. Make	Gabriel
	b. Type	Heavy-Duty
	c. Quantity	Four
9.	Wheels and Tires	
	a. Wheel Type	Disc
	b. Wheel Size	21 by 10 in (53.34 by 25.4 cm)
	c. Tire Size	16R21

Table 1-2. MK48 Technical Characteristics - CONT

Item No.	Characteristics	Data
10.	Brakes	
	a. No. 1 Axle	
	(1) Make	Rockwell
	(2) Type	Wedge
	b. No. 2 Axle	
	(1) Make	Eaton
	(2) Type	S-Cam
11.	Curb Weight	24,550 lb (11,145.7 kg)
12.	Seats (Cab or Driver's Compartment)	
	a. Make	Model Seats Incorporated
	b. Type	Suspension/Adjustable
	c. Capacity	One Person Per Seat
13.	Electrical System	
	a. Type	24 Volts (V) Negative Ground Alternating Current (ac)
	b. Battery	
	(1) Make	Prestolite
	Make*	Exide
	(2) Model	31ES
	Model*	6TL
	(3) Quantity	Four
	c. Starter	
	(1) Make	Delco Remy
	(2) Model	1990272
	d. Alternator	
	(1) Make	Leece Neville

* LVSA1 Series Vehicles Only

Table 1-2. MK48 Technical Characteristics-CONT

Item No.	Characteristics	Data
	d. Alternator-CONT	
	(2) Model	3428JC
	(3) Type	Direct Drive W/Integral Regulator
14.	Body	
	a. Length	238.5 in (605.7 cm)
	b. Height	102 in (259 cm)
	c. Width	96 in (243.8 cm)
	d. Ground Clearance	23 in (58.4 cm)
15.	Shipping Weight	12.5 tons (11.3 metric tons)
16.	Shipping Cubage	1,917 cubic feet (ft^3) (53.6 cubic meters (c^3))
17.	Capacities	
	a. Cooling System	27 gallons (102.6 liters (L))
	b. Engine	
	(1) Without Oil Filter	22 quarts (qt) (21 L)
	(2) With Oil Filter	24 qt (23 L)
	c. Fuel Tanks	75 gallons (284 L) each
	d. Hydraulic System	95 qt (90 L)
	e. Nose Box	7 pints (pt) (3.3 L)
	f. Axles (1 and 2)	33 pt (15.6 L)
	g. Transmission	36 qt (34 L)
	h. Transfer Case	10 qt (9.5 L)
	i. Windshield Washer	4 qt (3.78 L)

Section III. GENERAL CRITERIA

1-8. GENERAL REQUIREMENTS. The criteria established in this document and referenced publications will satisfy the requirements for overhaul or IROAN repair of the MK48.

1-9. FINAL INSPECTION. A final inspection of the IROAN or overhauled MK48 and its accessories shall be performed as specified in the subsequent Chapter.

1-10. MODIFICATIONS. All applicable modifications listed in the Marine Corps Stock List (SL) SL-1-2, for the MK48, shall be applied to assemblies and subassemblies at the time of overhaul or IROAN repair. Refer to Appendix A.

1-11. PUBLICATIONS. Publications to be used with this Standard to ensure application of the latest specifications, techniques, and technical procedures are listed in Appendix A.

1-12. SPECIAL TOOLS, JIGS, AND FIXTURES. No special tools, jigs, or fixtures are required for overhauling or repairing the MK48. Common tools and equipment associated with depot level maintenance facilities are not listed.

1-13. REQUIRED TEST EQUIPMENT. No special test equipment is required for overhaul of the MK48.

1-14. ESTIMATED MAN-HOUR REQUIREMENTS. The estimated man-hour requirements, the position, and the skill level of workers required to overhaul the MK48 are listed in Table 1-3.

Table 1-3. Estimated Man-Hour Requirements

Support Shop	Man-Hours	Position	Skill Level
Engine Shop	90	Heavy Mobile Equipment Mechanic (HMEM)	WG-5803-10
Power Train Shop	100	HMEM	WG-5803-10
Hydraulic/Accessory Shop	60	HMEM	WG-5803-10
Engineer Equipment Overhaul Shop	320	HMEM	WG-5803-10
Electrical Equipment Shop	60	Electrical Equipment Repairman	WG-2854-10
Welding Shop	30	Welder	WG-3703-10
Body Repair Shop	150	Heavy Mobile Equipment Metal Repairman	WG-3809-10
Machine Shop	30	Machinist	WG-3414-10
Sheet Metal Shop	30	Sheet Metal Mechanic	WG-3806-10
Cleaning (Sandblast)	100	Sandblaster	WG-5423-07

Table 1-3. Estimated Man-Hour Requirements-CONT

Support Shop	Man-Hours	Position	Skill Level
Paint Shop	100	Painter	WG-4102-09
Preservation Shop	4	Heavy Mobile Equipment Repairer	WG-5803-08
Reproduction/Graphic Arts	4	Photographer	GS-1060-07
Ordnance Inspection	2	Heavy Mobile Equipment Inspector (HMEI)	WG-5803-11
Vehicle Inspection	16	HMEI	WG-5803-11
Electronics Inspection	4	Electronic Systems Inspector	WG-2604-12
Support Inspection	4	HMEI	WG-5803-11

Section IV. MAINTENANCE FACILITY REQUIREMENTS

1-15. GENERAL REQUIREMENTS. The requirements in this section are essential to the successful overhaul or IROAN repair of the MK48 in an industrial plant, production-type operation.

1-16. BUILDING AND HARDSTAND REQUIREMENTS

a. Building Requirements. Buildings with sufficient floor space must be available to accommodate industrial-type systems for operations, plant tooling, and equipment. Floor space requirements are 16 by 48 feet for each MK48.

b. Hardstand Areas. Hardstand areas, with suitable access roads, must be large enough to accommodate the parking and transferring of job lot numbers of vehicles and equipment.

1-17. INSPECTION FACILITIES. Facilities must include, at a minimum, an inspector's work station with all test equipment required for the inspection of the MK48. Refer to Paragraph 1-13 for required test equipment.

1-18. SUPPORT SHOP SYSTEMS. Auxiliary shops to support production operations shall be available including the following minimum equipment and systems (appropriate variations and combinations may be used).

a. Work shops equipped with complete mechanics' tool sets, work benches and tables, 100 psi pressurized air system, and electrical systems with 110 and 220-Vac outlets

b. Overhead crane system

c. Jib cranes, 1,000-lb (454 kg) capacity

d. Forklifts, 1,000-lb (454 kg) to 10,000-lb (4,540 kg) capacity

e. Hydraulic jacks, floor-type, 12-1/2-tons capacity

f. Lubrication facilities with grease and oil filling capabilities

g. Industrial welding shop with mig welding, oxygen-acetylene, and heli-arc welding capabilities

h. Industrial body and fender shop

i. Industrial cleaning shop including steam, chemical cleaning, and abrasive cleaning systems

j. Industrial paint and finishing shop with compressed air-type spray painting equipment (refer to MIL-T-704 and Technical Manual (TM) 4750-15/1)

k. Electrical and mechanical accessories repair shop with complete test facilities for 110 and 220 Vac, 60 and 400 Hertz (Hz), 3 phase

l. Tire and tube shop

m. Sheet metal repair shop

n. Power train repair shop

o. Brake repair shop

p. Machine shop

q. Preservation and preparation for shipment shop

1-19. SAFETY PRECAUTIONS. Before beginning maintenance operations on the MK48, all personnel involved shall understand the hazards and the procedures by which hazards are to be reduced or avoided. Personnel shall be familiar with all aspects of personnel and equipment safety prior to the operation or maintenance of the MK48. Personnel involved in overhaul and testing shall be provided with appropriate safety equipment as required by Title 29, Code of Federal Regulations, Part 1910, Occupational Safety and Health Act (OSHA) for each hazardous operation included in this DMM.

1-20. ENVIRONMENTAL PRECAUTIONS. Title 40, Code of Federal Regulations, and all other state and federal environmental regulations shall be applied to facilities as required.

CHAPTER 2

OVERHAUL PROCEDURES

Section I. GENERAL OVERHAUL REQUIREMENTS

2-1. GENERAL INFORMATION

a. Scope of Work

(1) This chapter includes all the necessary requirements to restore the Power Unit, Front, 12-1/2 Ton, 4x4, MK48, Mod 0 to a serviceable condition. In conjunction with the planning data detailed in Chapter 1, the overhaul requirements provided in this Chapter will enable maintenance shops to produce a finished product.

(2) The MK48 to be overhauled has been inspected and classified as unserviceable but reparable. The condition of one MK48 compared to another will vary, depending upon age and usage.

b. Replacement of Parts

(1) Inspect parts and components as defined in this Chapter. Repair or replace all parts and components not meeting the established inspection criteria. Parts and components requiring more than 65 percent of acquisition cost to repair, including labor and replacement parts, are considered uneconomical for repair; replace these parts and components.

(2) Authorized maintenance parts are listed in TM 2320-24P/14.

(3) Mandatory parts replacement. Replace gaskets, seals, O-rings, cotter pins, lockwashers, locknuts, and safety wire 100 percent on parts and components disassembled for overhaul or IROAN repair.

c. Special Tools. No special tools are required for repair or overhaul of the MK48.

d. Process Planning and Scheduling. Process planning, scheduling, and rigid work phasing are dependent upon the capabilities of the maintenance facility and are not specified in this DMM. Processing and scheduling can only be determined by the processing personnel of the individual maintenance facility.

e. Inspection Requirements. Quality control inspections shall consist of the following:

(1) A pre-repair inspection of the MK48 (IROAN only)

(2) An in-process inspection of parts and components during disassembly, overhaul, and reassembly

(3) Testing as required or as necessary

(4) Final inspection

f. Pre-Repair Inspection Requirements. Upon receipt of MK48's at the maintenance facility for overhaul, no pre-repair inspection is required. However, the maintenance facility shall perform a pre-repair inspection on vehicles received for IROAN repair. Quality control personnel shall utilize the Initial Inspection Checklist, Table 2-1, TM 2320-10/11, TM 2320-20/12, TM 2320-34/13, and TM 2320-24P/14 to identify missing, damaged, and malfunctioning parts and components of MK48 IROAN vehicles.

Table 2-1. Initial Inspection Checklist

Item No.	Parameter	Method of Inspection	Pass	Fail
1.	Front of Vehicle	Visual/Functional	_____	_____
	a. Sheet Metal	Visual/Tactile	_____	_____
	(1) Rust and/or Corrosion	Visual/Tactile	_____	_____
	(2) Damage/Defects	Visual/Tactile	_____	_____
	b. Windshield	Visual/Tactile	_____	_____
	(1) Proper Installation	Visual/Tactile	_____	_____
	(2) Damage/Defects	Visual/Tactile	_____	_____
	c. Front Skid Plate	Visual/Tactile	_____	_____
	(1) Proper Installation	Visual/Tactile	_____	_____
	(2) Damage/Defects	Visual/Tactile	_____	_____
	d. Wiper Arms and Blades	Visual/Functional	_____	_____
	(1) Proper Installation	Visual/Tactile	_____	_____
	(2) Proper Operation	Visual/Functional	_____	_____
	(3) Damage/Defects	Visual/Tactile	_____	_____
	e. Cab Clearance Lights	Visual/Functional	_____	_____
	(1) Proper Installation	Visual/Tactile	_____	_____
	(2) Proper Operation	Visual/Functional	_____	_____
	(3) Damage/Defects	Visual/Tactile	_____	_____

Table 2-1. Initial Inspection Checklist-CONT

Item No.	Parameter	Method of Inspection	Pass	Fail
	f. Sealed Beam Headlights	Visual/Functional	_____	_____
	(1) Proper Installation	Visual/Tactile	_____	_____
	(2) Proper Operation	Visual/Functional	_____	_____
	(3) Damage/Defects	Visual/Tactile	_____	_____
	g. Turn Signal Lights	Visual/Functional	_____	_____
	(1) Proper Installation	Visual/Tactile	_____	_____
	(2) Proper Operation	Visual/Functional	_____	_____
	(3) Damage/Defects	Visual/Tactile	_____	_____
	h. Tiedown Eyes (Front/Rear)	Visual/Tactile	_____	_____
	(1) Proper Installation	Visual/Tactile	_____	_____
	(2) Cracks and/or Breaks	Visual/Tactile	_____	_____
	(3) Damage/Defects	Visual/Tactile	_____	_____
2.	Exterior Right Side of MK48	Visual/Functional	_____	_____
	a. Cab Step	Visual/Tactile	_____	_____
	(1) Proper Installation	Visual/Tactile	_____	_____
	(2) Damage/Defects	Visual/Tactile	_____	_____
	b. Reflector and Clearance Light	Visual/Functional	_____	_____
	(1) Proper Installation	Visual/Tactile	_____	_____
	(2) Proper Operation	Visual/Functional	_____	_____
	(3) Damage/Defects	Visual/Tactile	_____	_____
	c. Passenger Door	Visual/Functional	_____	_____
	(1) Proper Operation	Visual/Functional	_____	_____
	(a) Fit	Visual/Functional	_____	_____
	(b) Seal	Visual/Tactile	_____	_____
	(c) Damage/Defects	Visual/Tactile	_____	_____

Table 2-1. Initial Inspection Checklist-CONT

Item No.	Parameter	Method of Inspection	Pass	Fail
	c. Passenger Door-CONT			
	(2) Window	Visual/Functional	_____	_____
	(a) Proper Installation	Visual/Tactile	_____	_____
	(b) Proper Operation	Visual/Functional	_____	_____
	(c) Damage/Defects	Visual/Tactile	_____	_____
	(3) Side Mirrors w/Spotters	Visual/Tactile	_____	_____
	(a) Proper Installation	Visual/Tactile	_____	_____
	(b) Damage/Defects	Visual/Tactile	_____	_____
	d. Wheels and Tires	Visual/Tactile	_____	_____
	(1) Condition of Tires	Visual/Tactile	_____	_____
	(a) Cuts/Gouges	Visual/Tactile	_____	_____
	(b) Excessive Wear	Visual/Gauge	_____	_____
	(c) Proper Inflation	Visual/Gauge	_____	_____
	(2) Wheels/Lug Nuts	Visual/Tactile	_____	_____
	(a) Proper Installation	Visual/Tactile	_____	_____
	(b) Looseness	Visual/Tactile	_____	_____
	(c) Damage/Defects	Visual/Tactile	_____	_____
	e. Hydraulic Reservoir	Visual/Tactile	_____	_____
	(1) Correct Fluid Level	Visual/Tactile	_____	_____
	(2) Leakage	Visual/Tactile	_____	_____
	(3) Hoses/Lines/Fittings	Visual/Tactile	_____	_____
	(a) Looseness	Visual/Tactile	_____	_____
	(b) Proper Routing	Visual/Tactile	_____	_____
	(c) Damage/Defects	Visual/Tactile	_____	_____

Table 2-1. Initial Inspection Checklist - CONT

Item No.	Parameter	Method of Inspection	Pass	Fail
	e. Hydraulic Reservoir-CONT			
	(4) No rust on filler neck	Visual/Tactile	_____	_____
	(5) Sight Gauge	Visual/Tactile	_____	_____
	(a) Proper Installation	Visual/Tactile	_____	_____
	(b) Damage/Defects	Visual/Tactile	_____	_____
	(6) Hydraulic Selector Valve	Visual/Functional	_____	_____
	(a) Hoses/Fittings	Visual/Tactile	_____	_____
	(b) Leaks	Visual/Tactile	_____	_____
	(c) Damage/Defects	Visual/Tactile	_____	_____
	(7) Hydraulic Sampling Valve*	Visual/Functional	_____	_____
	(a) Fitting*	Visual/Tactile	_____	_____
	(b) Leaks*	Visual/Tactile	_____	_____
	(c) Damage/Defects*	Visual/Tactile	_____	_____
	f. Fuel Tank	Visual/Tactile	_____	_____
	(1) Proper Installation	Visual/Tactile	_____	_____
	(2) Proper Connections	Visual/Tactile	_____	_____
	(3) Damage/Defects	Visual/Tactile	_____	_____
	g. Muffler and Exhaust Assembly	Visual/Functional	_____	_____
	(1) Proper Installation	Visual/Tactile	_____	_____
	(2) Damage/Defects	Visual/Tactile	_____	_____
	h. Eng Oil/Transmission Oil Sampling Valves*	Visual/Functional	_____	_____
	(1) Hose/Fitting*	Visual/Tactile	_____	_____
	(2) Leaks*	Visual/Tactile	_____	_____
	(3) Damage/Defects*	Visual/Tactile	_____	_____
3.	Rear of MK48	Visual/Functional	_____	_____
	a. Auxiliary Work Light	Visual/Functional	_____	_____
	(1) Proper Installation	Visual/Tactile	_____	_____
	(2) Proper Operation	Visual/Functional	_____	_____
	(3) Damage/Defects	Visual/Tactile	_____	_____
	b. Fuel/Water Separator	Visual/Functional	_____	_____
	(1) Hose/Lines/Fittings	Visual/Tactile	_____	_____
	(a) Looseness	Visual/Tactile	_____	_____
	(b) Proper Routing	Visual/Tactile	_____	_____

* LVSA1 Series Vehicles Only

Table 2-1. Initial Inspection Checklist-CONT

Item No.	Parameter	Method of Inspection	Pass	Fail
	(1) Hose/Lines/Fittings-CONT			
	(c) Damage/Defects	Visual/Tactile	_____	_____
	(2) Water Drained	Visual/Tactile	_____	_____
	c. Tool Stowage Box	Visual/Functional	_____	_____
	(1) Proper Installation	Visual/Tactile	_____	_____
	(2) Damage/Defects	Visual/Tactile	_____	_____
	d. Fender/Splash Guards	Visual/Functional	_____	_____
	(1) Proper Installation	Visual/Tactile	_____	_____
	(2) Damage/Defects	Visual/Tactile	_____	_____
	e. Hydraulic Valves/Yaw Cylinder	Visual/Functional	_____	_____
	(1) Proper Operation	Visual/Functional	_____	_____
	(2) Hoses/Lines/Fittings	Visual/Tactile	_____	_____
	(a) Proper Installation	Visual/Tactile	_____	_____
	(b) Proper Routing	Visual/Tactile	_____	_____
	(c) Leaks	Visual/Functional	_____	_____
	(d) Damage/Defects	Visual/Tactile	_____	_____
	f. Trailer Electrical Connector	Visual/Functional	_____	_____
	(1) Proper Installation	Visual/Tactile	_____	_____
	(2) Rust and/or Corrosion	Visual/Tactile	_____	_____
	(3) Damage/Defects	Visual/Tactile	_____	_____
	g. Glad Hands-Service/Emergency	Visual/Functional	_____	_____
	(1) Air Lines/Hoses/Fittings	Visual/Functional	_____	_____
	(a) Looseness	Visual/Tactile	_____	_____
	(b) Proper Routing	Visual/Tactile	_____	_____
	(c) Damage/Defects	Visual/Tactile	_____	_____

Table 2-1. Initial Inspection Checklist-CONT

Item No.	Parameter	Method of Inspection	Pass	Fail
	g. Glad Hands-Service/ Emergency-CONT			
	(2) Proper ID Tag Color Codes	Visual/Tactile	_____	_____
	(3) Proper ID Tag Locations	Visual/Tactile	_____	_____
	h. Spare Tire and Davit	Visual/Functional	_____	_____
	(1) Tire Securely Mounted	Visual/Tactile	_____	_____
	(2) Tire Properly Inflated	Visual/Gauge	_____	_____
	(3) Tire Davit/Winch Cable/ Handle	Visual/Functional	_____	_____
	(a) Properly Stowed	Visual/Tactile	_____	_____
	(b) Damage/Defects	Visual/Tactile	_____	_____
4.	Exterior Left Side of MK48	Visual/Functional	_____	_____
	a. Cab and Vehicle Steps	Visual/Tactile	_____	_____
	(1) Proper Installation	Visual/Tactile	_____	_____
	(2) Damage/Defects	Visual/Tactile	_____	_____
	b. Reflector and Clearance Light	Visual/Functional	_____	_____
	(1) Proper Installation	Visual/Tactile	_____	_____
	(2) Proper Operation	Visual/Functional	_____	_____
	(3) Damage/Defects	Visual/Tactile	_____	_____
	c. Driver's Door	Visual/Functional	_____	_____
	(1) Proper Operation	Visual/Functional	_____	_____
	(a) Fit	Visual/Functional	_____	_____
	(b) Seal	Visual/Tactile	_____	_____
	(c) Damage/Defects	Visual/Tactile	_____	_____

Table 2-1. Initial Inspection Checklist-CONT

Item No.	Parameter	Method of Inspection	Pass	Fail
	c. Driver's Door-CONT			
	(2) Window	Visual/Functional	_____	_____
	(a) Proper Installation	Visual/Tactile	_____	_____
	(b) Proper Operation	Visual/Functional	_____	_____
	(c) Damage/Defects	Visual/Tactile	_____	_____
	(3) Side Mirrors	Visual/Tactile	_____	_____
	(a) Proper Installation	Visual/Tactile	_____	_____
	(b) Damage/Defects	Visual/Tactile	_____	_____
	d. Cab, Rear Window	Visual/Tactile	_____	_____
	(1) Proper Installation	Visual/Tactile	_____	_____
	(2) Damage/Defects	Visual/Tactile	_____	_____
	e. Wheels and Tires	Visual/Tactile	_____	_____
	(1) Condition of Tires	Visual/Tactile	_____	_____
	(a) Cuts/Gouges	Visual/Tactile	_____	_____
	(b) Excessive Wear	Visual/Gauge	_____	_____
	(c) Proper Inflation	Visual/Gauge	_____	_____
	(2) Wheel Lug Nuts	Visual/Tactile	_____	_____
	(a) Proper Installation	Visual/Tactile	_____	_____
	(b) Looseness	Visual/Tactile	_____	_____
	(c) Damage/Defects	Visual/Tactile	_____	_____
	f. Steering Linkage, Pitman Arm, Fuse and Drag Links	Visual/Functional	_____	_____
	(1) Proper Installation	Visual/Tactile	_____	_____
	(2) Connections	Visual/Tactile	_____	_____
	(3) Damage/Defects	Visual/Tactile	_____	_____

Table 2-1. Initial Inspection Checklist-CONT

Item No.	Parameter	Method of Inspection	Pass	Fail
	g. Battery Box	Visual/Tactile	_____	_____
	(1) Mounting	Visual/Tactile	_____	_____
	(2) Damage	Visual/Tactile	_____	_____
	(3) Slave Start Connector/Cap	Visual/Functional	_____	_____
	(a) Proper Installation	Visual/Tactile	_____	_____
	(b) Damage/Defects	Visual/Tactile	_____	_____
	h. Ether Start System	Visual/Functional	_____	_____
	(1) Proper Installation	Visual/Tactile	_____	_____
	(2) Proper Connection	Visual/Tactile	_____	_____
	(2) Damage/Defects	Visual/Tactile	_____	_____
	i. Fuel Tank	Visual/Tactile	_____	_____
	(1) Proper Installation	Visual/Tactile	_____	_____
	(2) Proper Connections	Visual/Tactile	_____	_____
	(3) Damage/Defects	Visual/Tactile	_____	_____
	j. Wheel Chock Frame	Visual/Tactile	_____	_____
	(1) Proper Installation	Visual/Tactile	_____	_____
	(2) Damage/Defects	Visual/Tactile	_____	_____
	k. Yaw Cylinder	Visual/Functional	_____	_____
	(1) Proper Operation	Visual/Functional	_____	_____
	(2) Hoses/Lines/Fittings	Visual/Functional	_____	_____
	(a) Proper Installation	Visual/Tactile	_____	_____
	(b) Proper Connections	Visual/Tactile	_____	_____
	(c) Proper Routing	Visual/Tactile	_____	_____
	(d) Leaks	Visual/Tactile	_____	_____
	(e) Damage/Defects	Visual/Tactile	_____	_____

Table 2-1. Initial Inspection Checklist-CONT

Item No.	Parameter	Method of Inspection	Pass	Fail
	I. Air Tank/Quick Disconnect	Visual/Functional	_____	_____
	(1) Air Lines/Hoses	Visual/Functional	_____	_____
	(a) Proper Installation	Visual/Tactile	_____	_____
	(b) Proper Connections	Visual/Tactile	_____	_____
	(c) Damage/Defects	Visual/Tactile	_____	_____
	(2) Fittings	Visual/Functional	_____	_____
	(a) Proper Installation	Visual/Tactile	_____	_____
	(b) Proper Connections	Visual/Tactile	_____	_____
	(c) Damage/Defects	Visual/Tactile	_____	_____
5.	Top of MK48	Visual/Functional	_____	_____
	a. Engine Compartment	Visual/Functional	_____	_____
	(1) Panel Hinges	Visual/Functional	_____	_____
	(a) Proper Operation	Visual/Functional	_____	_____
	(b) No Rust On Hinges	Visual/Tactile	_____	_____
	(2) Fuel Line Connections	Visual/Functional	_____	_____
	(a) Looseness	Visual/Tactile	_____	_____
	(b) Damage/Defects	Visual/Tactile	_____	_____
	(3) Electrical Connections	Visual/Functional	_____	_____
	(a) Proper Installation	Visual/Tactile	_____	_____
	(b) Proper Routing	Visual/Tactile	_____	_____
	(c) Damage/Defects	Visual/Tactile	_____	_____
	(4) Air Line Connections	Visual/Functional	_____	_____
	(a) Proper Installation	Visual/Tactile	_____	_____
	(b) Damage/Defects	Visual/Tactile	_____	_____

Table 2-1. Initial Inspection Checklist-CONT

Item No.	Parameter	Method of Inspection	Pass	Fail
	(5) Turbocharger, Lines/Fittings	Visual/Functional	_____	_____
	(a) Proper Installation	Visual/Tactile	_____	_____
	(b) Damage/Defects	Visual/Tactile	_____	_____
	(6) Compressor, Lines/Fittings	Visual/Functional	_____	_____
	(a) Proper Installation	Visual/Tactile	_____	_____
	(b) Damage/Defects	Visual/Tactile	_____	_____
	(7) Governor Housing and Emergency Stop	Visual/Functional	_____	_____
	(a) Proper Installation	Visual/Tactile	_____	_____
	(b) Proper Operation	Visual/Functional	_____	_____
	(c) Damage/Defects	Visual/Tactile	_____	_____
	(8) Radiator	Visual/Functional	_____	_____
	(a) Proper Installation	Visual/Tactile	_____	_____
	(b) Water Level	Visual/Tactile	_____	_____
	(c) Leaks	Visual/Tactile	_____	_____
	(d) Damage/Defects	Visual/Tactile	_____	_____
	(9) Fan and Fan Motor	Visual/Functional	_____	_____
	(a) Proper Installation	Visual/Tactile	_____	_____
	(b) Proper Operation	Visual/Functional	_____	_____
	(c) Damage/Defects	Visual/Tactile	_____	_____
	(10) Blower Housing	Visual/Functional	_____	_____
	(a) Proper Installation	Visual/Tactile	_____	_____
	(b) Corrosion	Visual/Tactile	_____	_____
	(c) Damage/Defects	Visual/Tactile	_____	_____

Table 2-1. Initial Inspection Checklist-CONT

Item No.	Parameter	Method of Inspection	Pass	Fail
	(11) Alternator	Visual/Functional	_____	_____
	(a) Proper Installation	Visual/Tactile	_____	_____
	(b) Proper Connections	Visual/Tactile	_____	_____
	(c) Proper Operation	Visual/Functional	_____	_____
	(d) Damage/Defects	Visual/Tactile	_____	_____
	(12) Engine	Visual/Functional	_____	_____
	(a) Proper Oil Level	Visual/Gauge	_____	_____
	(b) General Inspection	Visual/Tactile	_____	_____
	(c) Leaks	Visual/Tactile	_____	_____
	(d) Damage/Defects	Visual/Tactile	_____	_____
	(13) Transmission	Visual/Functional	_____	_____
	(a) Proper Oil Level	Visual/Gauge	_____	_____
	(b) General Inspection	Visual/Tactile	_____	_____
	(c) Leaks	Visual/Tactile	_____	_____
	(d) Damage/Defects	Visual/Tactile	_____	_____
	b. Air Cleaner	Visual/Functional	_____	_____
	(1) Lines/Hoses/Fittings	Visual/Functional	_____	_____
	(a) Clamp Looseness	Visual/Tactile	_____	_____
	(b) Damage/Defects	Visual/Tactile	_____	_____
	(2) Dust Cap	Visual/Tactile	_____	_____
	(a) Proper Installation	Visual/Tactile	_____	_____
	(b) Damage/Defects	Visual/Tactile	_____	_____
	(3) Damage/Defects	Visual/Tactile	_____	_____

Table 2-1. Initial Inspection Checklist-CONT

Item No.	Parameter	Method of Inspection	Pass	Fail
6.	Underside of MK48	Visual/Functional	_____	_____
	a. Front Suspension	Visual/Functional	_____	_____
	b. Air Reservoir-Lines/Hoses/Fittings	Visual/Functional	_____	_____
	(1) Proper Installation	Visual/Tactile	_____	_____
	(2) Leaks	Visual/Tactile	_____	_____
	(3) Damage/Defects	Visual/Tactile	_____	_____
	c. Glad Hands-Service/Emergency	Visual/Functional	_____	_____
	(1) Proper Installation	Visual/Tactile	_____	_____
	(2) Leaks	Visual/Tactile	_____	_____
	(3) Damage/Defects	Visual/Tactile	_____	_____
	d. Axle No. 1	Visual/Functional	_____	_____
	(1) Proper Installation	Visual/Tactile	_____	_____
	(2) Lubricant Level	Visual/Tactile	_____	_____
	e. Axle No. 2	Visual/Functional	_____	_____
	(1) Proper Installation	Visual/Tactile	_____	_____
	(2) Lubricant Level	Visual/Tactile	_____	_____
	f. Transfer Case	Visual/Functional	_____	_____
	(1) Proper Installation	Visual/Tactile	_____	_____
	(2) Fluid Level	Visual/Tactile	_____	_____
	(3) Leaks	Visual/Tactile	_____	_____
	(4) Damage/Defects	Visual/Tactile	_____	_____
	g. Input/Output Shafts	Visual/Functional	_____	_____
	(1) Proper Installation	Visual/Tactile	_____	_____
	(2) Lubrication	Visual/Tactile	_____	_____

Table 2-1. Initial Inspection Checklist - CONT

Item No.	Parameter	Method of Inspection	Pass	Fail
g.	Input/Output Shafts-CONT			
(3)	Leaks	Visual/Tactile	_____	_____
(4)	Damage/Defects	Visual/Tactile	_____	_____
h.	Front Axle Steering Stops	Visual/Functional	_____	_____
i.	Shock Absorbers	Visual/Functional	_____	_____
(1)	Proper Installation	Visual/Tactile	_____	_____
(2)	Leaks	Visual/Tactile	_____	_____
(3)	Damage/Defects	Visual/Tactile	_____	_____
j.	Air Brake Chambers	Visual/Tactile	_____	_____
(1)	Proper Installation	Visual/Tactile	_____	_____
(2)	Proper Operation	Visual/Functional	_____	_____
(3)	Damage/Defects	Visual/Tactile	_____	_____
k.	Air Lines/Hoses/Fittings	Visual/Functional	_____	_____
(1)	Proper Installation	Visual/Tactile	_____	_____
(2)	Looseness	Tactile/Tactile	_____	_____
(3)	Leaks	Visual/Tactile	_____	_____
(4)	Damage/Defects	Visual/Tactile	_____	_____
l.	Breather Cap Free Play	Visual/Tactile	_____	_____
m.	Leaf Spring and Torque Rods	Visual/Functional	_____	_____
(1)	Proper Installation	Visual/Tactile	_____	_____
(2)	Damage/Defects	Visual/Tactile	_____	_____
n.	Cab Mounting Biscuits	Visual/Tactile	_____	_____
(1)	Proper Installation	Visual/Tactile	_____	_____
(2)	Damage/Defects	Visual/Tactile	_____	_____
o.	Hi-Pressure Filter*	Visual/Functional	_____	_____
(1)	Hoses/Fittings*	Visual/Tactile	_____	_____
(2)	Leaks*	Visual/Tactile	_____	_____
(3)	Damage/Defects*	Visual/Tactile	_____	_____

* LVSA1 Series Vehicles Only

Table 2-1. Initial Inspection Checklist-CONT

Item No.	Parameter	Method of Inspection	Pass	Fail
7.	Cab Lights/Horn-Operational	Visual/Functional	_____	_____
	a. Dash Panel Gauge Lights	Visual/Functional	_____	_____
	b. Shift Selector Light	Visual/Functional	_____	_____
	c. Dome Light	Visual/Functional	_____	_____
	d. Headlights-High/Low Beam Indicator	Visual/Functional	_____	_____
	e. Emergency Flashers	Visual/Functional	_____	_____
	f. Blackout Lights	Visual/Functional	_____	_____
	g. Work Lights	Visual/Functional	_____	_____
	h. Horns (Electrical and Air)	Visual/Functional	_____	_____
8.	Cab Interior Trim	Visual/Tactile	_____	_____
	a. Sun Visors-Right/Left	Visual/Tactile	_____	_____
	(1) Proper Installation	Visual/Tactile	_____	_____
	(2) Damage/Defects	Visual/Tactile	_____	_____
	b. Seats	Visual/Functional	_____	_____
	(1) Driver	Visual/Tactile	_____	_____
	(a) Proper Installation	Visual/Tactile	_____	_____
	(b) Proper Adjustment	Visual/Tactile	_____	_____
	(2) Passenger	Visual/Tactile	_____	_____
	(a) Proper Installation	Visual/Tactile	_____	_____
	(b) Proper Adjustment	Visual/Tactile	_____	_____
	c. Seat Belts	Visual/Functional	_____	_____
	(1) Proper Installation	Visual/Tactile	_____	_____
	(2) Proper Operation	Visual/Functional	_____	_____

g. Inspection Record. A written record shall provide sufficient detail to furnish procurement and planning activities information required for advance procurement of replacement parts and components and for cost accounting requirements.

h. In-Process Inspection Requirements. Disassembled items shall be inspected by the technician during disassembly, repair, and assembly according to inspection criteria detailed for that item in Section IV of this Chapter. Table 2-2, Sample In-Process Inspection Checklist, is provided as a guide for formulating an In-Process Inspection Checklist.

Table 2-2. Sample In-Process Inspection Checklist

Item No.	Parameter	Method of Inspection	Pass	Fail
1.	Wheel and Lockring	Visual/Tactile	____	____
	a. Deformation	Visual/Tactile	____	____
	b. Cracks	Visual/Tactile	____	____
	c. Mounting Holes	Visual/Tactile	____	____
	d. Corrosion	Visual/Tactile	____	____
2.	Valve Core and Cap	Visual/Tactile	____	____
	a. Thread Damage	Visual/Tactile	____	____
	b. Seal Damage	Visual/Tactile	____	____
	c. Bends	Visual/Tactile	____	____
	d. Corrosion	Visual/Tactile	____	____
3.	Tire	Visual/Tactile	____	____
	a. Foreign Objects Embedded	Visual/Tactile	____	____
	b. Tread Wear	Visual/Gauge	____	____
	c. Cuts/Cracks/Breaks/Holes	Visual/Tactile	____	____
	d. Damaged Beads	Visual/Tactile	____	____

Section II. REMOVAL OF MAJOR COMPONENTS

2-2. REMOVAL OF MAJOR COMPONENTS. Removal of the MK48's major components will be covered in this Section. For disassembly, cleaning, inspection, repair, and assembly of major components, refer to Section IV of this Chapter. Drain, inspect, and clean the MK48 prior to removal of major components. Remove major components as necessary to effect repairs for overhaul or IROAN repair procedures.

2-3. BATTERY CABLES, BATTERIES, AND BATTERY BOX

WARNING

To prevent personal injury, disconnect batteries. Do not wear watches, rings, or other jewelry when working on electrical components.

Do not smoke or use an open flame around batteries. Sparks may cause batteries to explode.

To prevent arcing and personal injury, do not allow tools to contact battery box or battery terminals when removing or installing cables.

When disconnecting battery cables, always disconnect ground terminal first. When reconnecting always connect ground cables last.

a. Remove battery (bat) box cover (1, Figure 2-1) from battery box (41).

b. Remove locknut (2) and negative (neg) battery cable (4) from negative battery stud (3). Discard locknut (2).

c. Remove locknut (5) and positive (pos) battery cable (7) from positive battery stud (6). Discard locknut (5).

d. Remove locknut (8) and one end of battery cable (10) from negative battery stud (9) and remove the other end of battery cable (10) from negative battery stud (3). Discard locknut (8).

e. Remove two wires (11 and 12) from negative battery stud (3).

f. Remove capscrew (13), lockwasher (14), and one end of battery cable (16) from slave connector (15) and remove the other end of battery cable (16) from negative battery stud (9). Discard lockwasher (14).

g. Remove locknut (17) and one end of battery cable (19) from positive battery stud (18) and remove the other end of battery cable (19) from positive battery stud (6). Discard locknut (17).

h. Remove wire (20) from positive battery stud (6).

i. Remove capscrew (21), lockwasher (22), and one end of battery cable (23) from slave connector (15) and remove the other end of battery cable (23) from positive battery stud (18). Discard lockwasher (22).

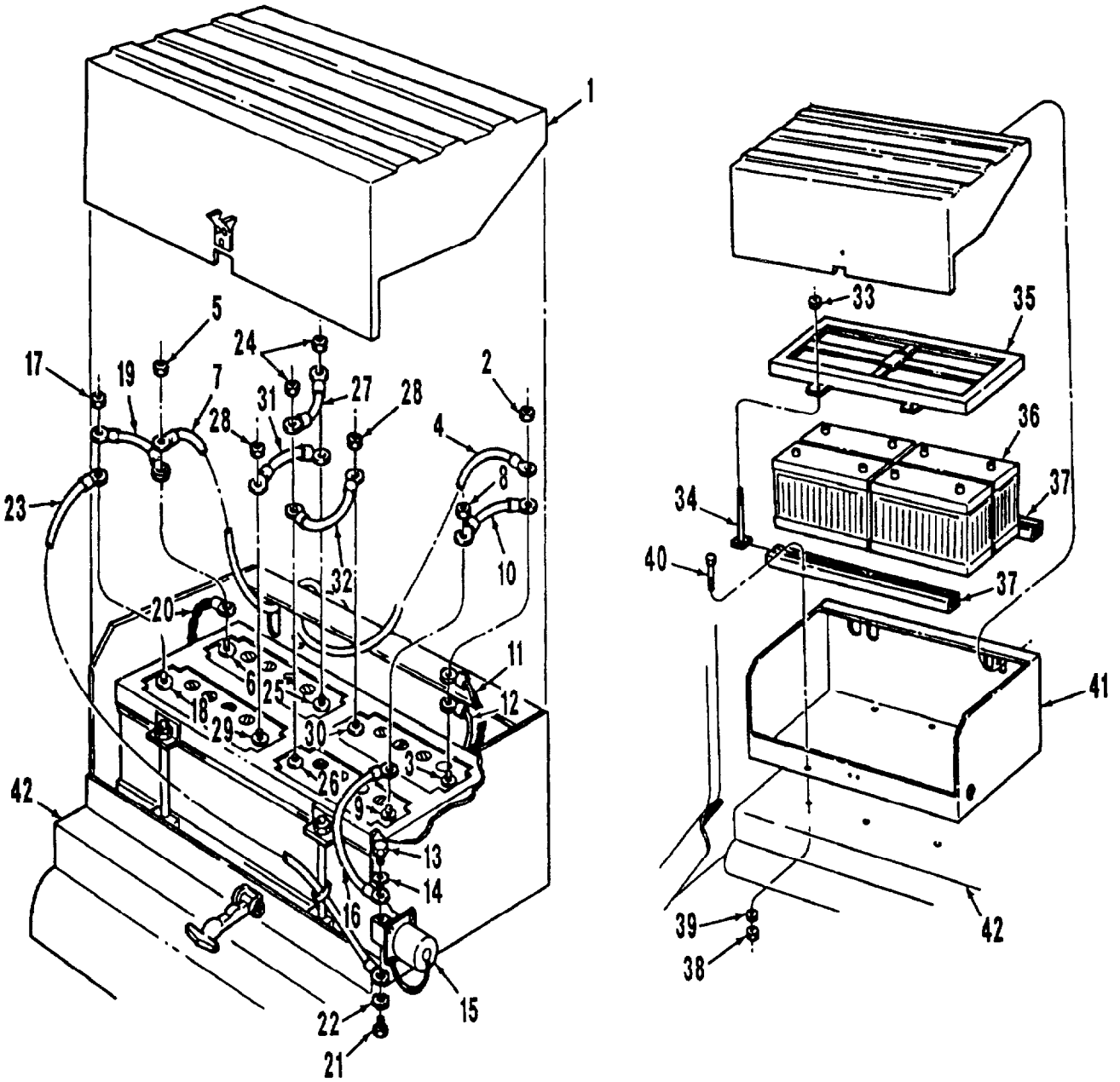

1. Bat Box Cover
2. Locknut
3. Neg Bat Stud
4. Neg Bat Cable
5. Locknut
6. Pos Bat Stud
7. Pos Bat Cable
8. Locknut
9. Neg Bat Stud
10. Battery Cable
11. Wire
12. Wire
13. Capscrew
14. Lockwasher
15. Slave Connector
16. Battery Cable
17. Locknut
18. Pos Bat Stud
19. Battery Cable
20. Wire
21. Capscrew
22. Lockwasher
23. Battery Cable
24. Locknut (2)
25. Neg Bat Stud
26. Pos Bat Stud
27. Battery Cable
28. Locknut (2)
29. Neg Bat Stud
30. Pos Bat Stud
31. Battery Cable
32. Battery Cable
33. Locknut (4)
34. Bat Hold-Down Capscrew (4)
35. Hold-Down Frame
36. Battery (4)
37. Bracket (2)
38. Nut (6)
39. Lockwasher (6)
40. Capscrew (6)
41. Battery Box
42. Left Fender

Figure 2-1. Battery Cables, Batteries, and Battery Box

j. Remove two locknuts (24) and battery cable (27) from negative battery stud (25) and positive battery stud (26). Discard locknuts.

k. Remove two locknuts (28) from negative battery stud (29) and positive battery stud (30). Discard locknuts (28).

l. Remove battery cable (31) from negative battery studs (25 and 29).

m. Remove battery cable (32) from positive battery studs (26 and 30).

n. Remove four locknuts (33) from battery hold-down capscrews (34). Discard locknuts (33).

o. Remove battery hold-down frame (35) from four batteries (36).

p. Remove four batteries (36) from battery box (41).

q. Slide four battery hold-down capscrews (34) out of brackets (37).

r. Remove six nuts (38), lockwashers (39), and capscrews (40) from two brackets (37). Discard lockwashers (39).

s. Remove two brackets (37) from battery box (41) and remove battery box (41) from left fender (42).

2-3.1. BATTERY CABLES, BATTERIES, AND BATTERY BOX (LVSA1 SERIES VEHICLES ONLY)

WARNING

To prevent personal injury, disconnect batteries. Do not wear watches, rings, or other jewelry when working on electrical components.

Do not smoke or use an open flame around batteries. Sparks may cause batteries to explode.

To prevent arcing and personal injury, do not allow tools to contact battery box or battery terminals when removing or installing cables.

When disconnecting battery cables, always disconnect ground terminal first. When reconnecting always connect ground cables last.

NOTE

Tag and mark all cables, wires, and terminals prior to removal.

a. Remove battery box cover (1, Figure 2-1.1, Sheet 1 of 2).

b. Loosen nut (2) and remove terminal (3) from battery post (4).

c. Loosen nut (5) and remove terminal (6) from battery post (7).

d. Remove four nuts (8), lockwashers (9), eight washers (10), two brackets (11), and four hold-down hooks (12).

e. Loosen nut (13) and remove terminal (14) from battery post (15).

f. Repeat step e. for terminals (16, 17, 18, 19, and 20).

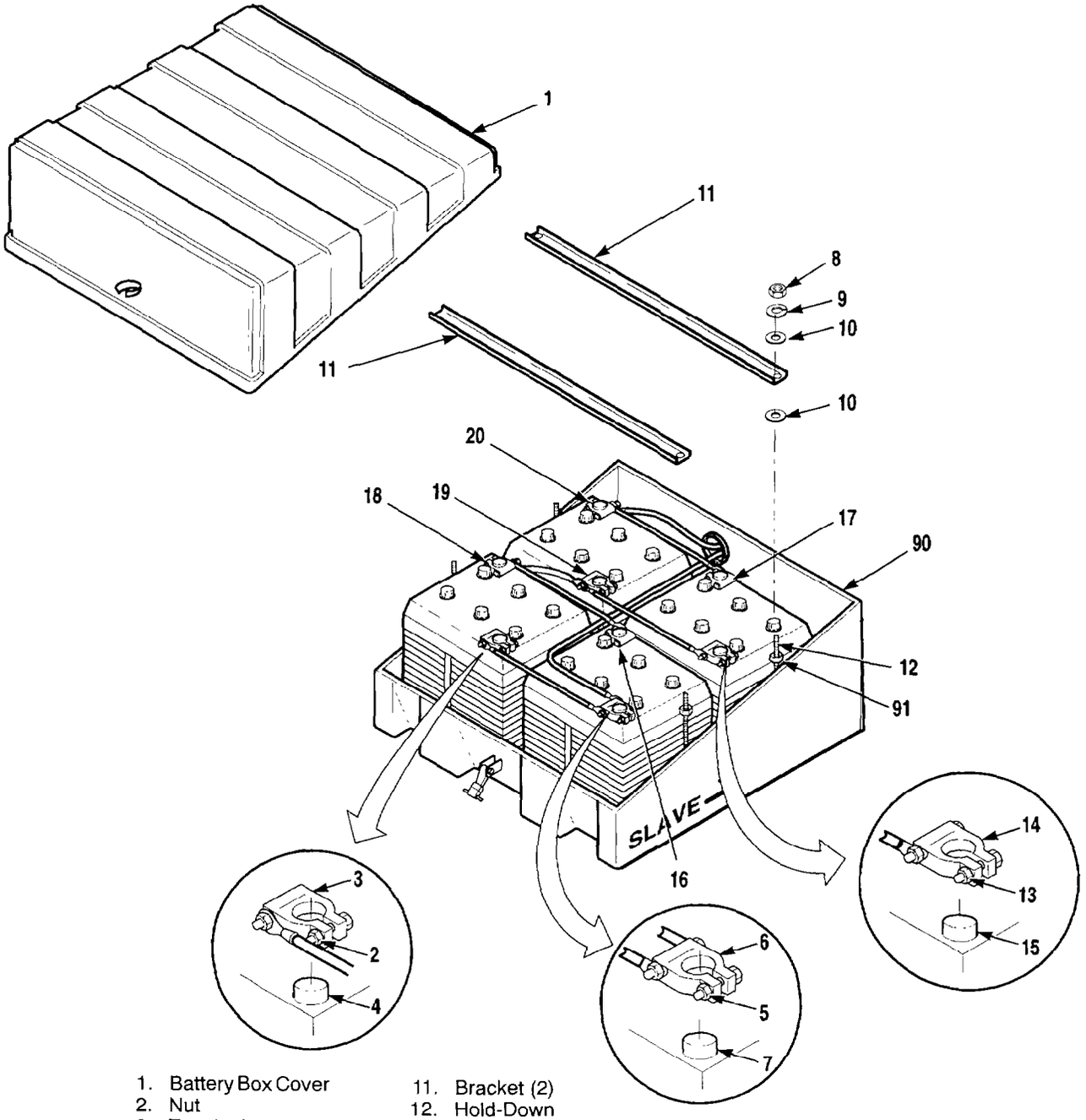

1. Battery Box Cover
2. Nut
3. Terminal
4. Battery Post
5. Nut
6. Terminal
7. Battery Post
8. Nut (4)
9. Lockwasher (4)
10. Washer (8)
11. Bracket (2)
12. Hold-Down Hook (4)
13. Nut
14. Terminal
15. Battery Post
16. Terminal
17. Terminal
18. Terminal
19. Terminal
20. Terminal

■ 91. Hold-down Hook Nut (4)

Figure 2-1.1. Battery Cables, Batteries, and Battery Box (LVSA1 Series Vehicles Only) (Sheet 1 of 2)

g. Remove nut (21, Figure 2-1.1, Sheet 2 of 2), lockwasher (22), washer (23), two cables (24 and 25), wire (26), washer (27), and capscrew (28) from terminal (6). Discard lockwasher (22).

h. Remove nut (5) and capscrew (29) from terminal (6).

i. Remove nut (30), lockwasher (31), washer (32), cable (24), washer (33), and capscrew (34) from terminal (3). Discard lockwasher (31).

j. Remove nut (2) and capscrew (35) from terminal (3)

k. Remove nut (36), lockwasher (37), washer (38), cable (39), washer (40), and capscrew (41) from terminal (16). Discard lockwasher (37).

l. Remove nut (42) and capscrew (43) from terminal (16).

m. Remove nut (44), lockwasher (45), washer (46), two cables (39 and 47), washer (48), and capscrew (49) from terminal (18). Discard lockwasher (45).

n. Remove nut (50) and capscrew (51) from terminal (18).

o. Remove nut (52), lockwasher (53), washer (54), two cables (47 and 55), washer (56), and capscrew (57) from terminal (19). Discard lockwasher (53).

p. Remove nut (58) and capscrew (59) from terminal (19).

q. Remove nut (60), lockwasher (61), washer (62), cable (55), washer (63), and capscrew (64) from terminal (14). Discard lockwasher (61).

r. Remove nut (13) and capscrew (65) from terminal (14).

s. Remove nut (66), lockwasher (67), washer (68), two cables (69 and 70), washer (71), and capscrew (72) from terminal (20). Discard lockwasher (67).

t. Remove nut (73) and capscrew (74) from terminal (20).

u. Remove nut (75), lockwasher (76), washer (77), wire (78), cable (70), washer (79), and capscrew (80) from terminal (17). Discard lockwasher (76).

v. Remove nut (81) and capscrew (82) from terminal (17).

w. Remove four batteries (83)

x. Remove four locknuts (84), washer (85), and capscrews (86). Discard locknuts (84).

y. Remove two locknuts (87), four washers (88), and two capscrews (89). Remove battery box (90) from vehicle. Discard locknuts (87).

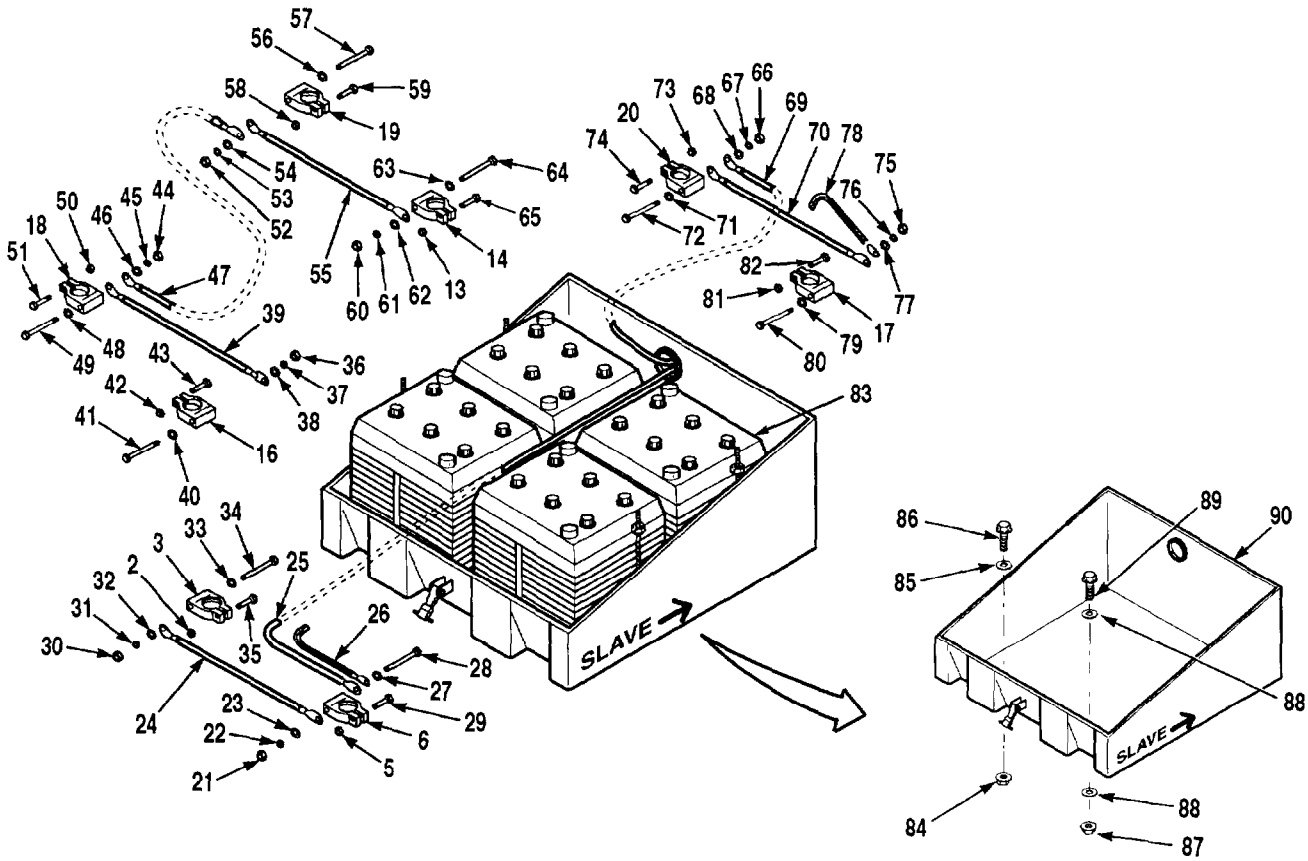

2. Nut	30. Nut	50. Nut	70. Cable
3. Terminal	31. Lockwasher	51. Capscrew	71. Washer
5. Nut	32. Washer	52. Nut	72. Capscrew
6. Terminal	33. Washer	53. Lockwasher	73. Nut
13. Nut	34. Capscrew	54. Washer	74. Capscrew
14. Terminal	35. Capscrew	55. Cable	75. Nut
16. Terminal	36. Nut	56. Washer	76. Lockwasher
17. Terminal	37. Lockwasher	57. Capscrew	77. Washer
18. Terminal	38. Washer	58. Nut	78. Wire
19. Terminal	39. Cable	59. Capscrew	79. Washer
20. Terminal	40. Washer	60. Nut	80. Capscrew
21. Nut	41. Capscrew	61. Lockwasher	81. Nut
22. Lockwasher	42. Nut	62. Washer	82. Capscrew
23. Washer	43. Capscrew	63. Washer	83. Battery (4)
24. Cable	44. Nut	64. Capscrew	84. Locknut (4)
25. Cable	45. Lockwasher	65. Capscrew	85. Washer (4)
26. Wire (821/813)	46. Washer	66. Nut	86. Capscrew (4)
27. Washer	47. Cable	67. Lockwasher	87. Locknut (2)
28. Capscrew	48. Washer	68. Washer	88. Washer (4)
29. Capscrew	49. Capscrew	69. Cable	89. Capscrew (2)
			90. Battery Box

Figure 2-1.1. Battery Cables, Batteries, and Battery Box
(LVSA1 Series Vehicles Only) (Sheet 2 of 2)

2-3.2. SLAVE CONNECTOR (LVSA1 SERIES VEHICLES ONLY)

NOTE

Perform step a. on LVSA1 series vehicles only.

a. Remove cable tie (1) and bellows (2).

NOTE

Tag both cables to insure proper installation.

b. Remove two capscrews (3, Figure 2-1.2), lockwashers (4), and battery cables (5 and 6). Discard lockwashers (4).

c. Remove four capscrews (7) and locknuts (8). Discard locknuts (8).

d. Remove insulator (9), cover (10), slave connector (11), and gasket (12). Discard gasket (12).

1. Cable Tie*
2. Bellows*
3. Capscrew (2)
4. Lockwasher (2)
5. Battery Cable
6. Battery Cable
7. Capscrew (4)
8. Locknut (4)
9. Insulator
10. Cover
11. Slave Connector
12. Gasket

* LVSA1 Series Vehicles

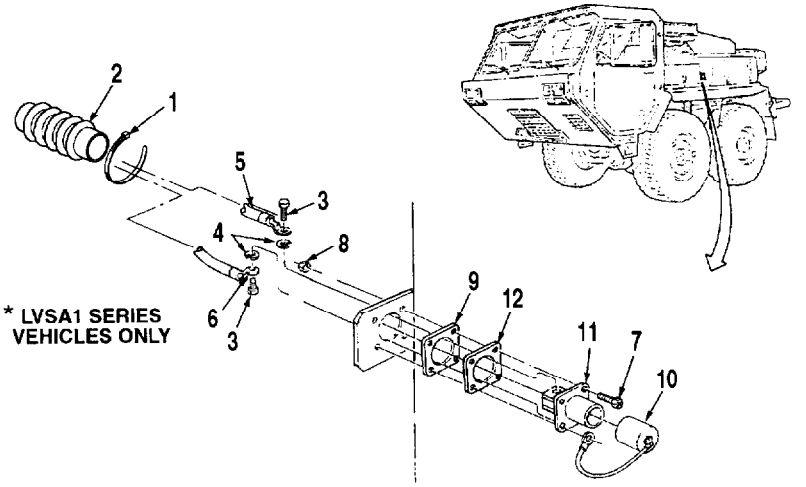

Figure 2-1.2. Slave Connector

2-4. WHEEL AND TIRE ASSEMBLY

WARNING

The MK48 is extremely front-heavy when detached from the trailer. Do not attempt to raise No. 2 axle without placing two jack stands at the front lifting brackets. Serious injury or death could result.

Before performing any type of service on wheel and tire assembly (1, Figure 2-2), always inspect lockring (2), flange (3), and rim (8) on the inside and outside of the wheel. A loosened lockring (2), flange (3), or bent rim (8) is very dangerous.

Always deflate tire (4) by removing valve stem cap (5) and valve stem core (9) before attempting wheel and tire assembly (1) removal. Even a flat tire may retain sufficient air pressure to blow off a loosened rim component with enough force to cause bodily injury. Stand out of the trajectory area or personal injury or death may occur.

NOTE

Lug nuts on left side of vehicle are left-hand thread. Lug nuts on right side of vehicle are right-hand thread. Do not attempt to switch sides. Loosen lug nuts before raising tire off floor.

a. Lift front of MK48 using an overhead lifting device.

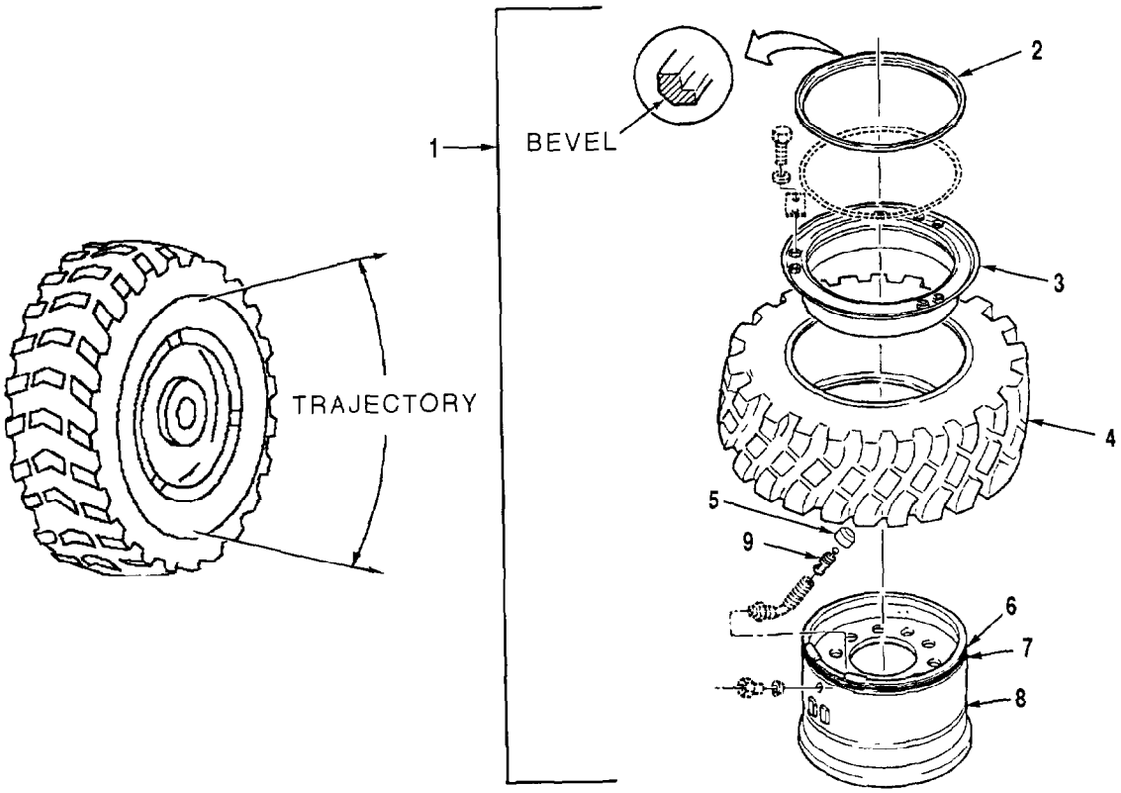

1. Wheel and Tire Assembly
2. Lockring
3. Flange
4. Tire
5. Valve Stem Cap
6. Lockring Groove
7. O-Ring Groove
8. Rim
9. Valve Stem Core

Figure 2-2. Wheel and Tire Assembly

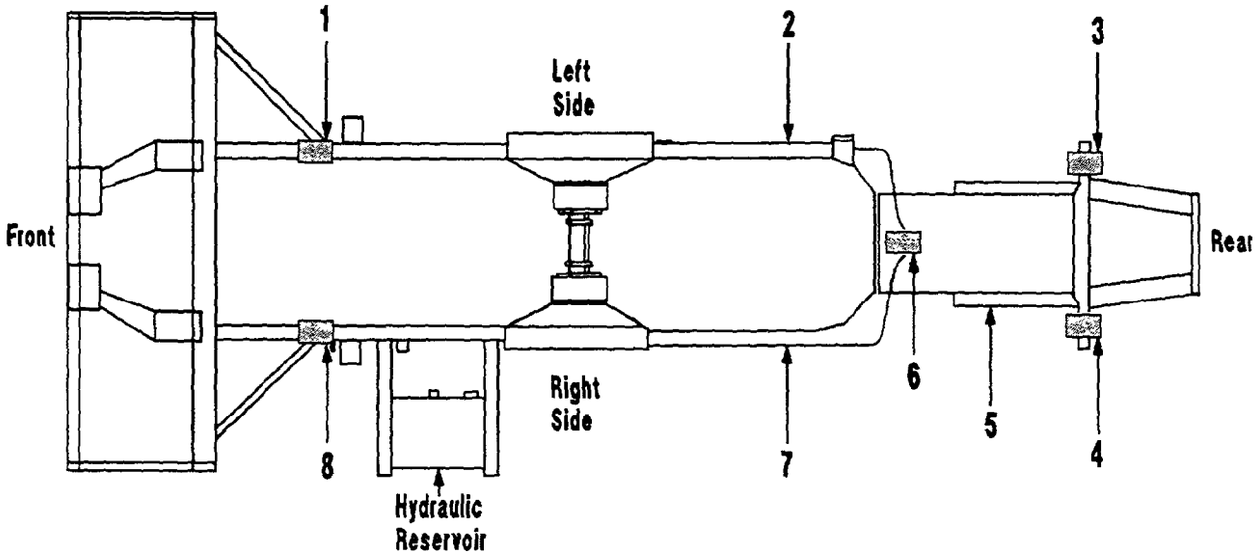

1. Left Front Position
2. Left Frame Rail
3. Left Rear Position
4. Right Rear Position
5. Articulation Joint
6. Center Rear Position
7. Right Frame Rail
8. Right Front Position

Figure 2-3. Jack Stand Positions (Underside View)

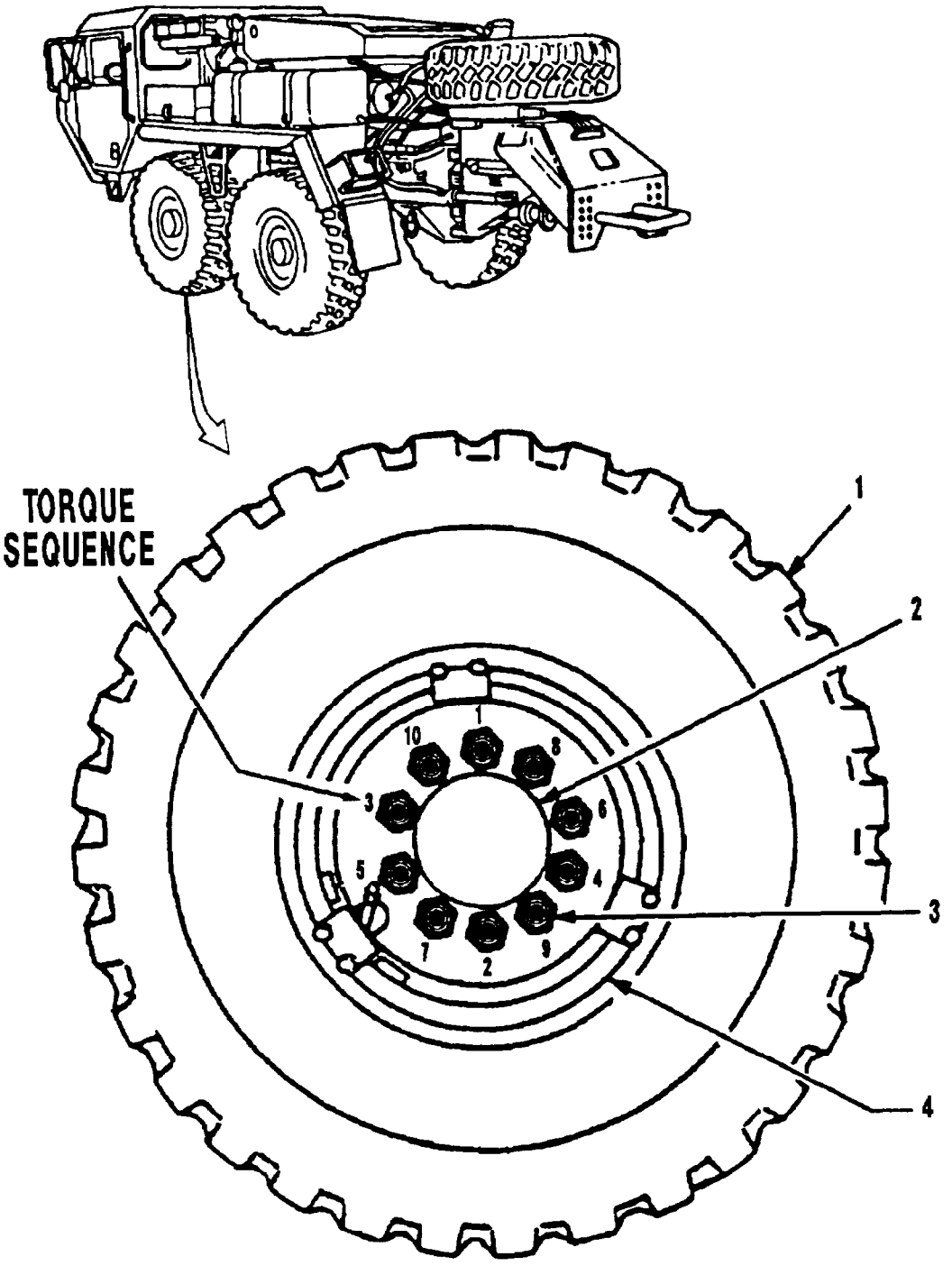

1. Tire
2. Hub
3. Lug Nut (10)
4. Wheel Assembly

Figure 2-4. Lug Nuts - Wheel and Tire Assembly

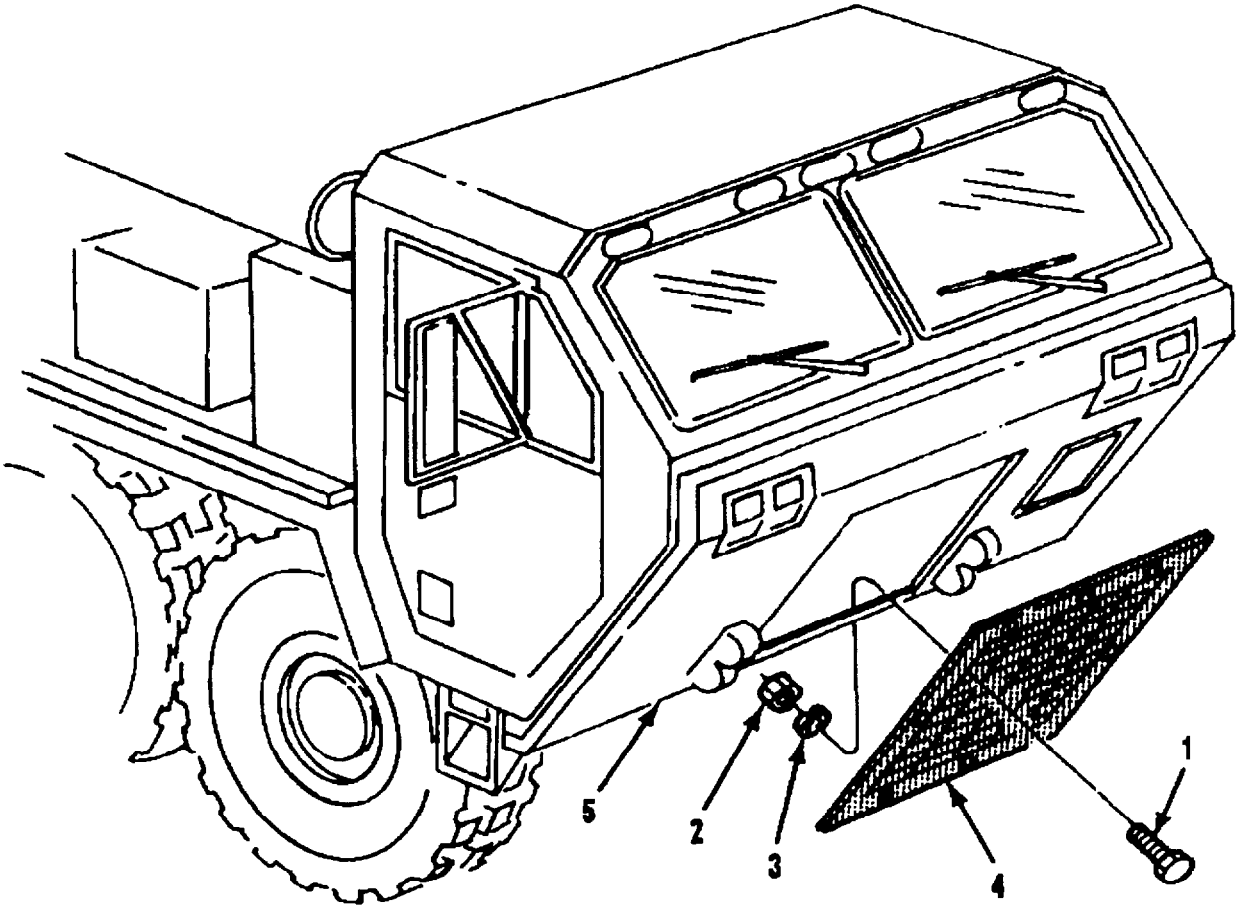

1. Capscrew (8)
2. Nut (8)
3. Lockwasher (8)
4. Grille
5. Skid Plate

Figure 2-5. Grille

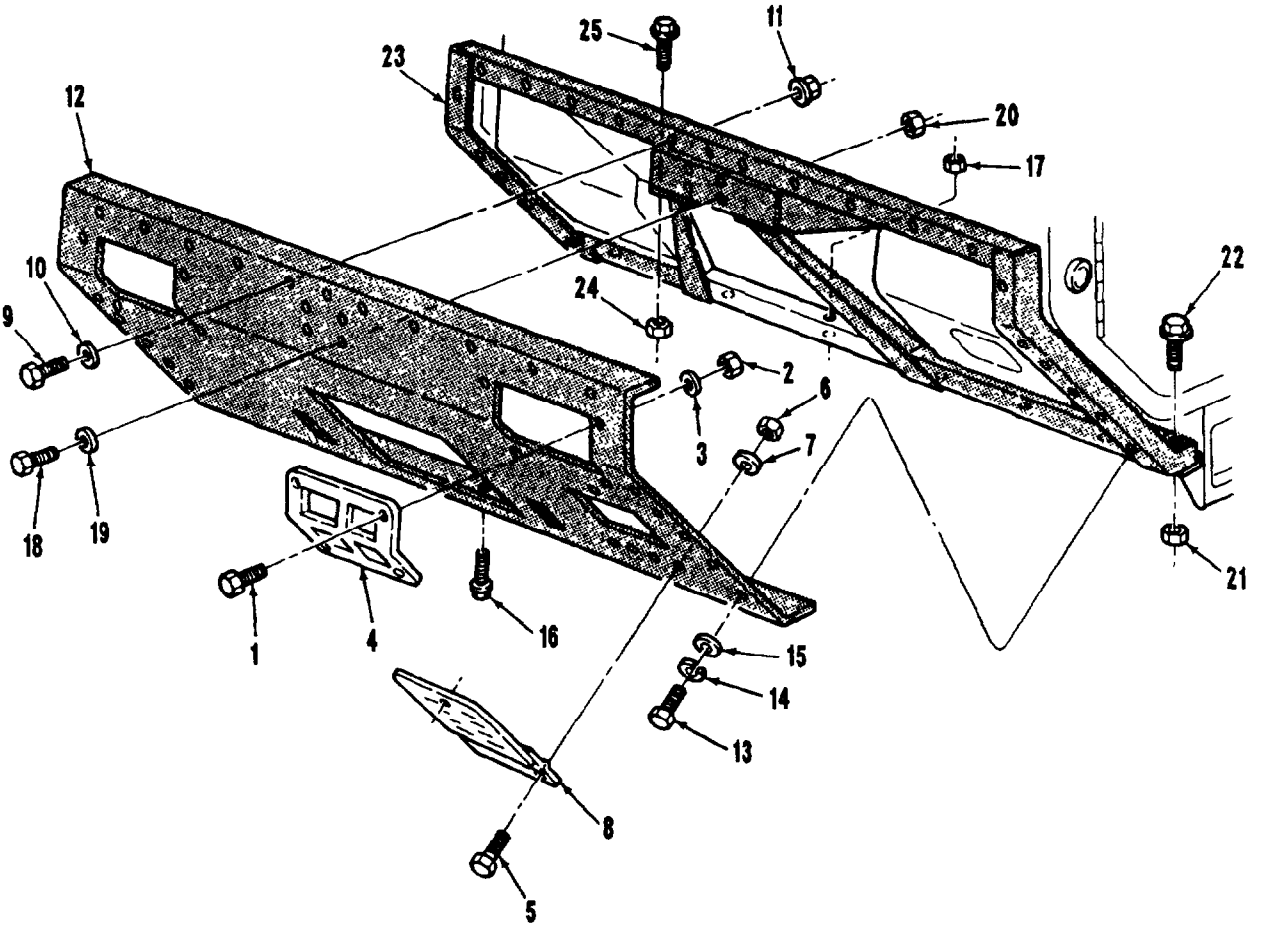

1. Capscrew (8)
2. Nut (8)
3. Washer (8)
4. Headlight Guard (2)
5. Capscrew (5)
6. Nut (5)
7. Washer (5)
8. Peep Window Guard
9. Capscrew (11)
10. Washer (11)
11. Nut (11)
12. Skid Plate
13. Capscrew (10)
14. Lockwasher (10)
15. Washer (10)
16. Capscrew (9)
17. Nut (9)
18. Capscrew (4)
19. Washer (4)
20. Nut (4)
21. Nut (2)
22. Capscrew (2)
23. Skid Plate Frame
24. Nut (8)
25. Capscrew (8)

Figure 2-6. Skid Plate and Skid Plate Frame

(8) Remove four nuts (20), capscrews (18), and washers (19) from skid plate (12).

(9) Carefully remove skid plate (12) from vehicle using an overhead lifting device.

c. Skid Plate Frame

WARNING

The skid plate frame is very heavy. To prevent serious personal injury or death, use an overhead lifting device to remove skid plate frame from vehicle.

(1) Remove two nuts (21) and capscrews (22) from skid plate frame (23).

(2) Remove eight nuts (24) and capscrews (25) from skid plate frame (23).

(3) Remove skid plate frame (23) from vehicle using an overhead lifting device.

2-6. EXTERIOR ACCESS PANELS

a. Remove 11 capscrews (4, Figure 2-7), lockwashers (5), and washers (6) from exterior access panels (1, 2, 7, 8, and 9). Discard lockwashers (5).

b. Remove exterior access panels (1, 2, 7, 8, and 9) from vehicle.

c. Remove molding (3) from access panel (2).

2-7. BEACON LIGHT AND MOUNTING BRACKET

a. Cut primary wire (5, Figure 2-8) about three inches above cable tie (7).

b. Remove three nuts (6), star washers (2), and screws (1) from beacon light (16). Discard star washers (2).

c. Lift beacon light (16) and remove nut (11), screw (3), star washer (2), terminal (4), ground wire (14), and star washer (2) from mounting (mtg) bracket (12). Discard star washers (2).

d. Remove primary wire (5), rubber bushing (13), ground wire (14), beacon light (16), and gasket (15) from mounting bracket (12). Discard gasket (15).

e. Remove nut (11), screw (3), and cable tie (7) from mounting bracket (12).

f. Remove four nuts (10), lockwashers (9), capscrews (8), and lockwasher (9) from mounting bracket (12) and remove mounting bracket (12) from vehicle. Discard lockwashers (9).

2-8. EXHAUST PIPE AND MUFFLER ASSEMBLY

WARNING

The exhaust pipe and muffler assembly is very heavy. To prevent personal injury, use two slings, if necessary, and an overhead lifting device to remove exhaust pipe and muffler assembly from vehicle.

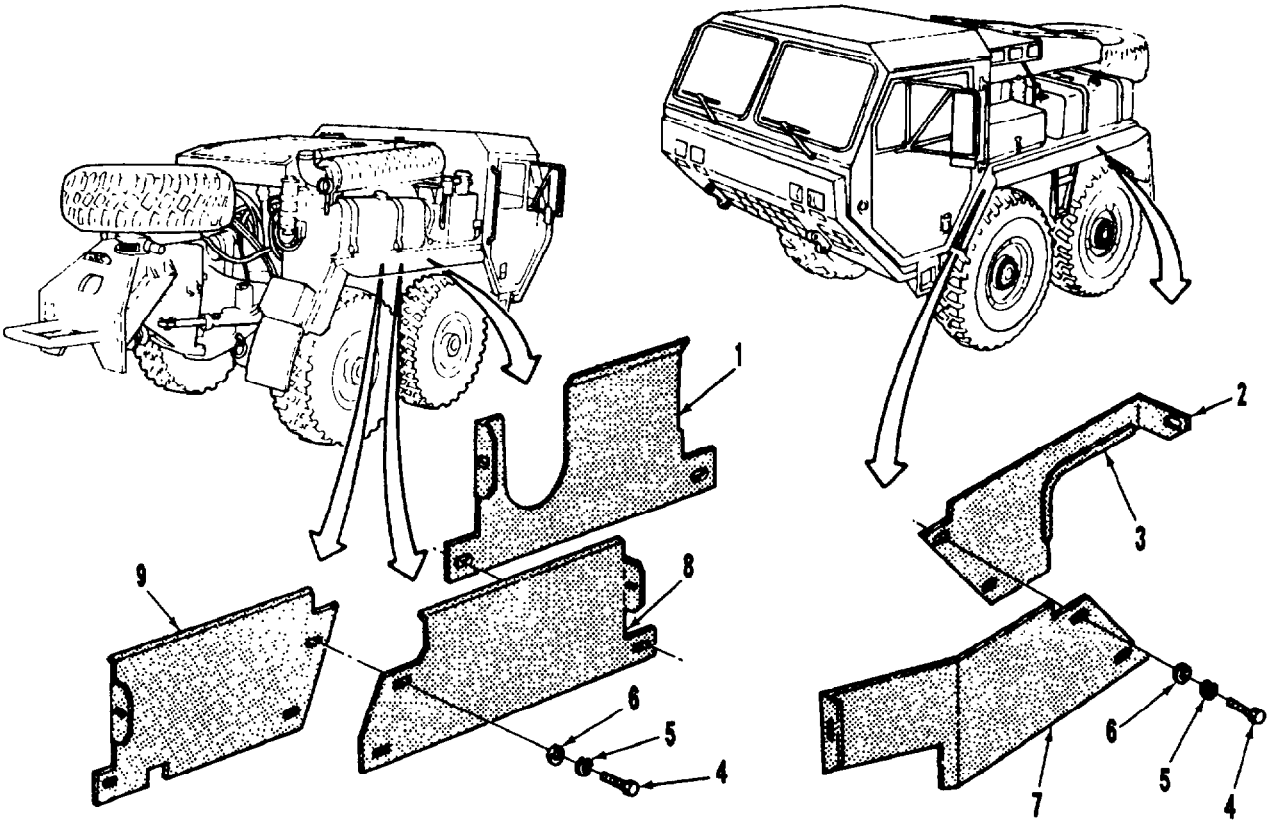

1. Exterior Access Panel
2. Exterior Access Panel
3. Molding
4. Capscrew (11)
5. Lockwasher (11)
6. Washer (11)
7. Exterior Access Panel
8. Exterior Access Panel
9. Exterior Access Panel

Figure 2-7. Exterior Access Panels

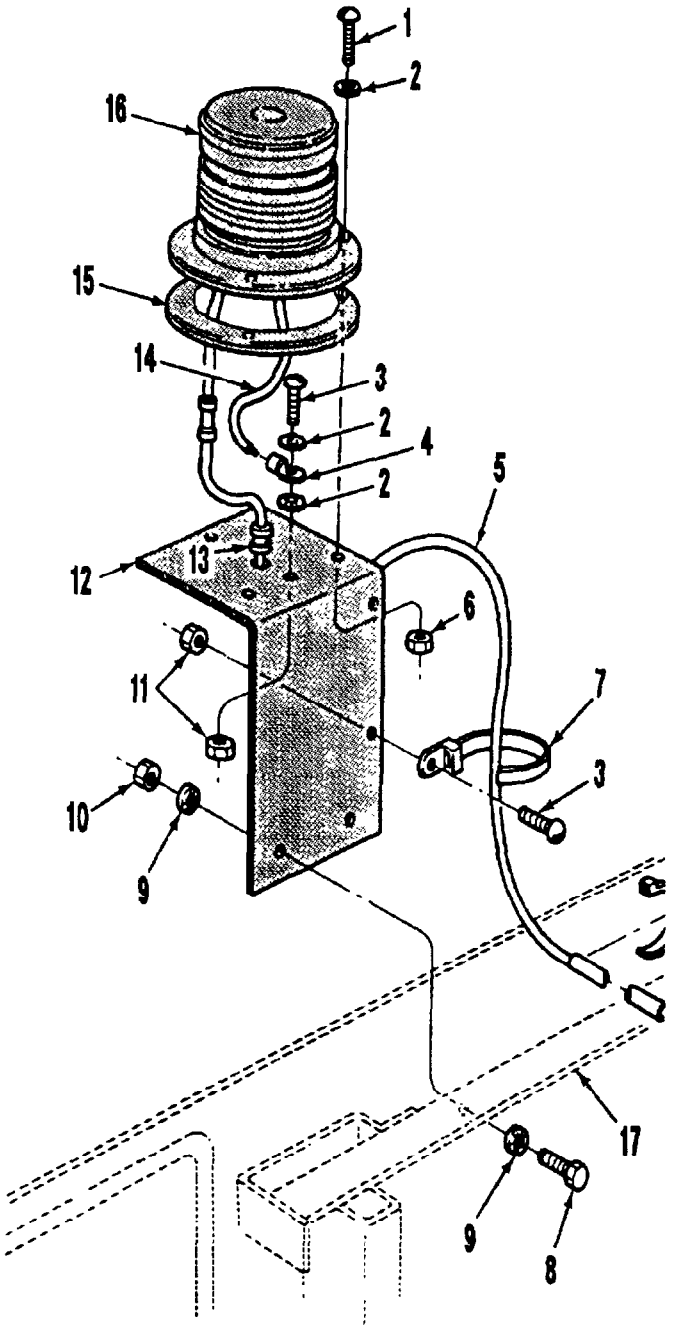

1. Screw (3)
2. Star Washer (5)
3. Screw (3)
4. Terminal
5. Primary Wire
6. Nut (3)
7. Cable Tie
8. Capscrew (2)
9. Lockwasher (4)
10. Nut (4)
11. Nut (3)
12. Mounting Bracket
13. Rubber Bushing
14. Ground Wire
15. Gasket
16. Beacon Light
17. Vehicle Bracket

Figure 2-8. Beacon Light and Mounting Bracket

a. Loosen nut (1, Figure 2-9) and slide clamp (2) off exhaust pipe (3) toward tubocharger (4).

b. Remove nut (5), capscrew (6), and rain cap (7) from exhaust elbow (8).

c. Remove two capscrews (9) and lockwashers (10) from rear mounting plate (11). Discard lockwashers (10).

d. Remove two nuts (2), lockwashers (13), washers (14), and capscrews (15) from clamp (16). Discard lockwashers (13).

e. Remove muffler (17) and exhaust pipe (3) from vehicle.

2-9. WORK LIGHTS

NOTE

There are two work lights on the MK48. Removal is the same for both.

a. Unscrew and remove plug (1, Figure 2-10) from connector (5).

b. Remove retaining pin (2) and work light (3) from bracket (4).

2-10. FUEL FILTERS, HAND PRIMING PUMP, AND MOUNTING BRACKET.

a. Fuel/Water Separator

NOTE

Tag all fuel lines before removal to ensure proper installation.

Place a container under fuel/water separator to catch any fuel that might spill when lines are removed.

(1) Tag and unplug two wires (11 and 16, Figure 2-11) from fuel/water separator (23).

WARNING

To prevent personal injury, disconnect batteries. Do wear watches, rings, or other jewelry when working on electrical components.

NOTE

Perform step (1.1) on LVSA1 series vehicles only.

(1.1) Tag and cut wire (8.1) at butt connector (8.2).

(2) Loosen fitting (5) and remove hose (6) from 90° elbow (4).

(3) Loosen fitting (9) and remove hose (10) from 90° elbow (8).

(4) Disconnect plug (7).

(5) Loosen fitting (13) and remove hose (10) from straight adapter (14).

(6) Loosen fitting (15) and remove hose (12) from 90° elbow (17).

(7) Loosen fitting (21) and remove hose (22) from 90° elbow (18).

NOTE

Have assistant hold fuel/water separator (23) during removal.

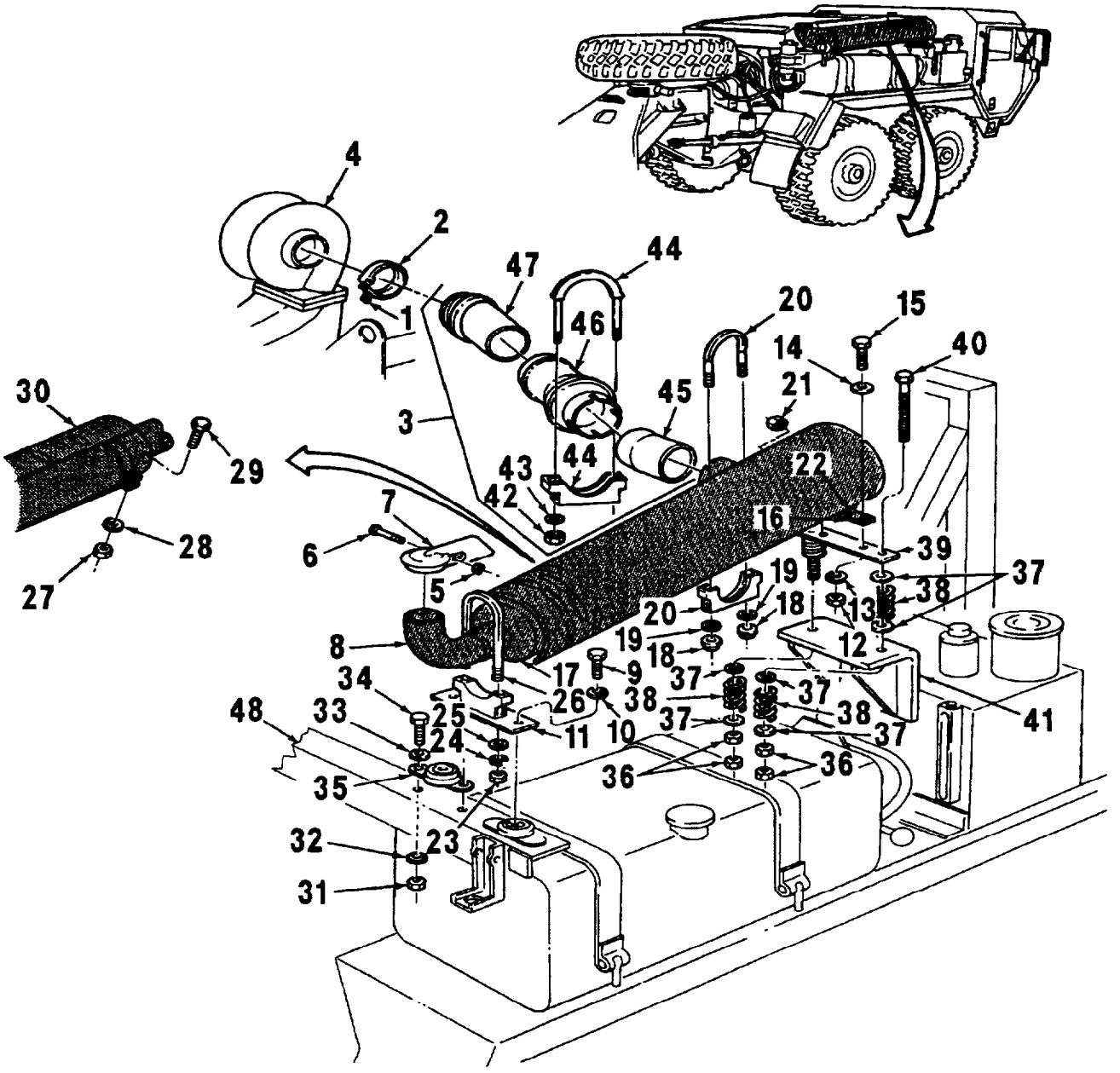

1. Nut
2. Clamp
3. Exhaust Pipe
4. Turbocharger
5. Nut
6. Capscrew
7. Rain Cap
8. Exhaust Elbow
9. Capscrew (2)
10. Lockwasher (2)
11. Rear Mtg Plate
12. Nut (2)
13. Lockwasher (2)
14. Washer (2)
15. Capscrew (2)
16. Clamp
17. Muffler
18. Nut (2)
19. Washer (2)
20. Clamp
21. Locknut
22. Capscrew
23. Nut (2)
24. Lockwasher (2)
25. Washer (2)
26. Clamp
27. Nut (3)
28. Lockwasher (3)
29. Capscrew (3)
30. Heat Shield
31. Nut (2)
32. Lockwasher (2)
33. Washer (2)
34. Capscrew (2)
35. Rear Mtg Biscuit (2)
36. Nut (4)
37. Washer (10)
38. Spring (4)
39. Plate
40. Capscrew (2)
41. Mtg Bracket
42. Nut (2)
43. Lockwasher (2)
44. Clamp
45. Elbow
46. Ball Joint
47. Flange
48. Mtg Bracket

Figure 2-9. Exhaust Pipe and Muffler Assembly

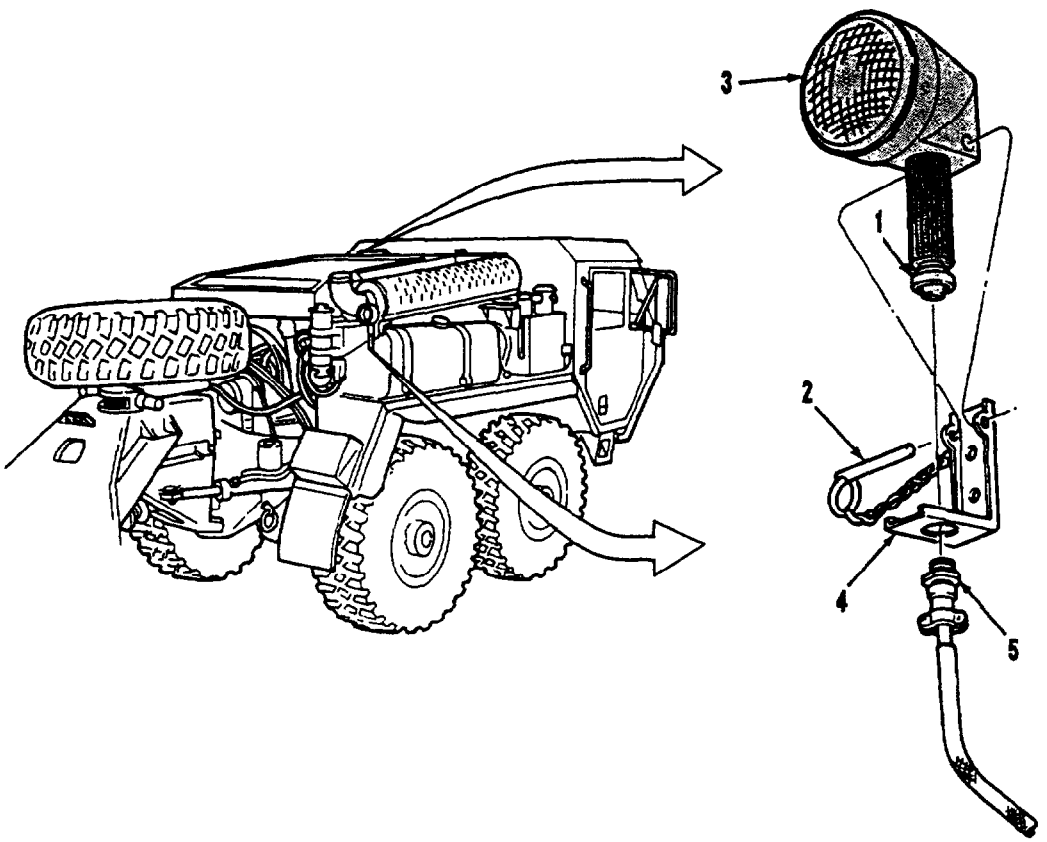

1. Plug
2. Retaining Pin
3. Work Light (2)
4. Bracket
5. Connector

Figure 2-10. Work Lights

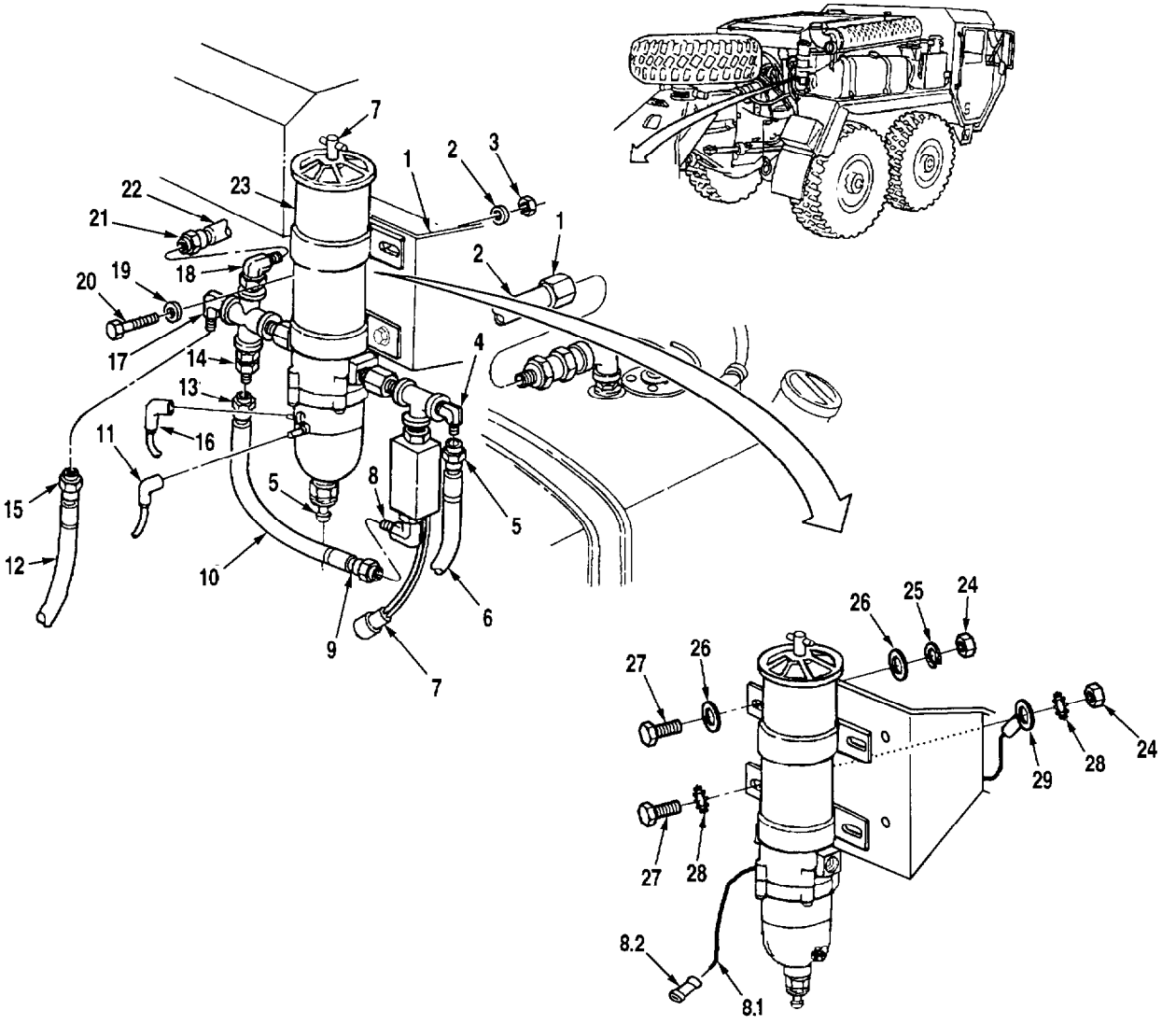

1. Mounting Bracket
2. Lockwasher (4)
3. Nut (4)
4. 90° Elbow
5. Fitting
6. Hose
7. Plug
8. 90° Elbow
8.1. Wire
8.2. Butt Connector
9. Wire
10. Hose
11. Wire
12. Hose
13. Fitting
14. Adapter
15. Fitting
16. Wire
17. 90° Elbow
18. 90° Elbow
19. Washer (4)
20. Capscrew (4)
21. Fitting
22. Hose
23. Fuel/Water Separator
24. Nut (4)*
25. Lockwasher (3)*
26. Washer (6)*
27. Capscrew (4)*
28. Star Washer (2)*
29. Terminal*

* LVSA1 Series Vehicles Only

Figure 2-11. Fuel/Water Separator

(8) Remove four capscrews (20), washers (19), nuts (3), and lockwashers (2). Discard lockwashers (2).

NOTE

Perform steps (8.1) and (8.2) on LVSA1 series vehicles only.

(8.1) Remove three nuts (24), lockwashers (25), six washers (26), and three capscrews (27). Discard lockwashers (24).

(8.2) Remove nut (24), two star washers (28), terminal (29), and capscrew (27). Discard star washer (28).

(9) Remove fuel/water separator (23) from mounting bracket (1).

b. Secondary Fuel Filter and Adapter

NOTE

Tag all fuel lines before removal to ensure proper installation.

Place a container under fuel/water separator to catch any fuel that might spill when lines are removed.

(1) Using a filter wrench, turn filter element (1, Figure 2-12) counterclockwise and remove it from filter adapter (12). Discard filter element (1).

(2) Remove three fuel lines (2, 3, and 4) from 90° elbows (5, 6, and 7) respectively.

NOTE

Note position of 90° elbows before removal to ensure proper installation.

(3) Remove three 90° elbows (5, 6, and 7) from filter adapter (12).

(4) Remove two nuts (8), lockwashers (10), washers (9), and capscrews (11) from filter adapter (12). Discard lockwashers (10).

(5) Remove filter adapter (12) from mounting bracket (13).

c. Hand Priming pump and Mounting Bracket

(1) Loosen nut (1, Figure 2-13, Sheet 1 of 2) on handle assembly (2).

NOTE

Tag all hoses before removal to ensure proper installation

Place a container below handle assembly (2) to catch any fuel that might spill.

(2) Pull handle assembly (2) from hand priming pump barrel (3).

(3) Remove two O-rings (14) from handle assembly (2). Discard O-rings (14).

(4) Remove nut (4) from hand priming pump barrel (3).

(5) Push hand priming pump barrel (3) through and away from mounting bracket (5).

(6) Loosen hose nuts (6 and 7).

(7) Remove hoses (8 and 9) from elbows (10 and 11) respectively.

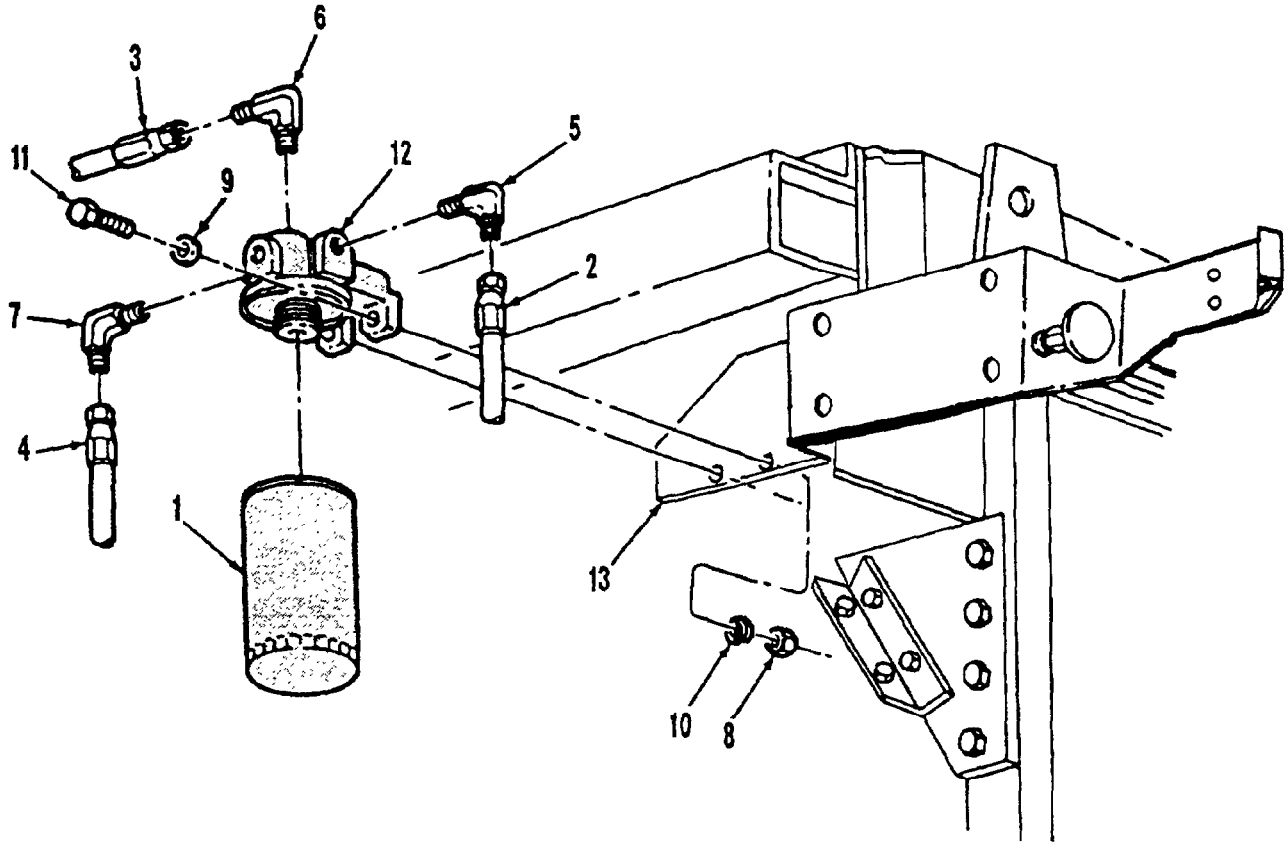

1. Filter Element
2. Fuel Line (No. 262)
3. Fuel Line (No. 263)
4. Fuel Line (No. 264)
5. 90° Elbow
6. 90° Elbow
7. 90° Elbow
8. Nut (2)
9. Washer (2)
10. Lockwasher (2)
11. Capscrew (2)
12. Filter Adapter
13. Mounting Bracket

Figure 2-12. Secondary Fuel Filter and Adapter

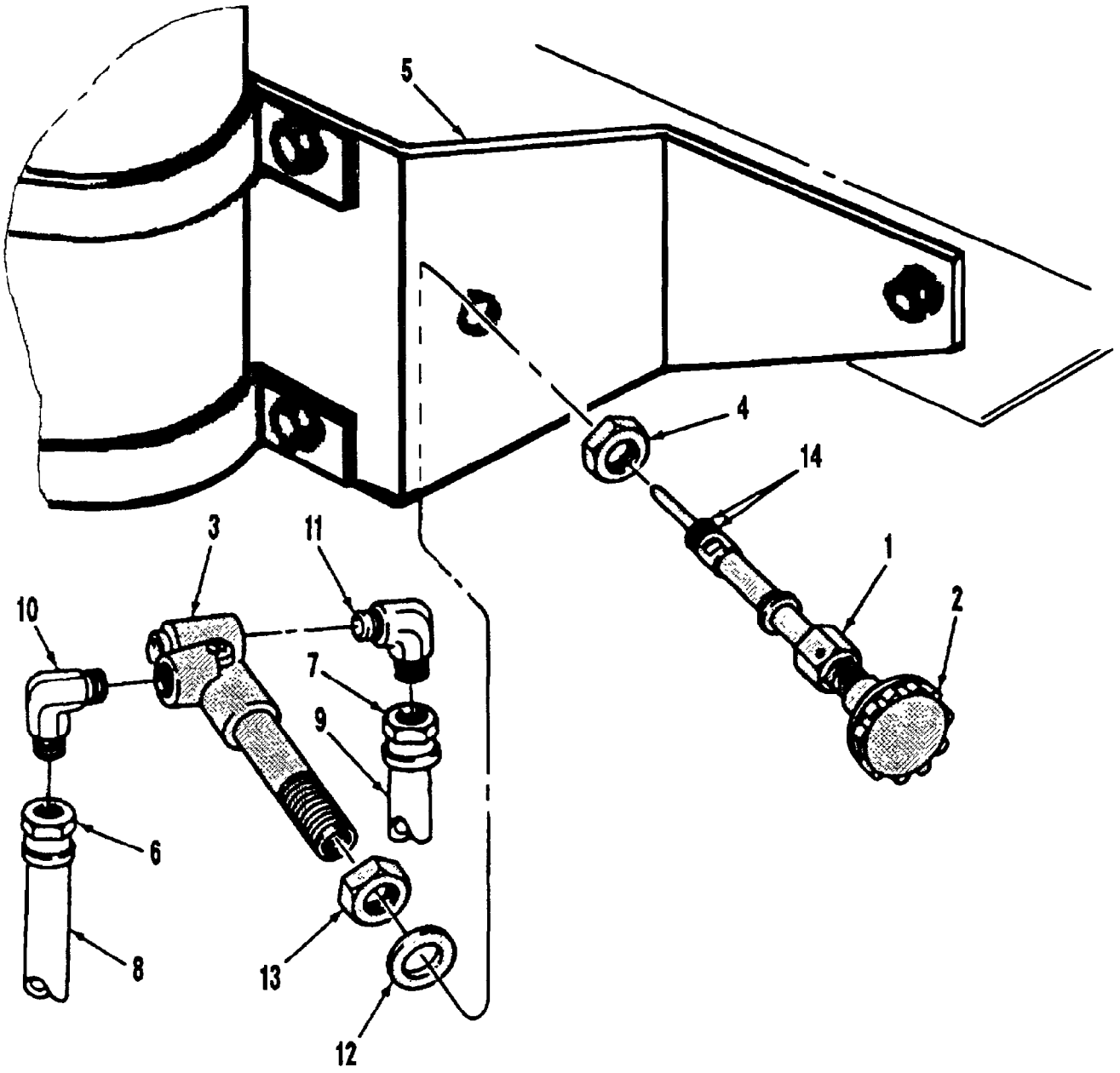

1. Nut
2. Handle Assembly
3. Hand Priming Pump Barrel
4. Nut
5. Mounting Bracket
6. Hose Nut
7. Hose Nut
8. Hose
9. Hose
10. 90° Elbow
11. 90° Elbow
12. Washer
13. Nut
14. O-Ring (2)

Figure 2-13. Hand Priming Pump and Mounting Bracket
(Sheet 1 of 2)

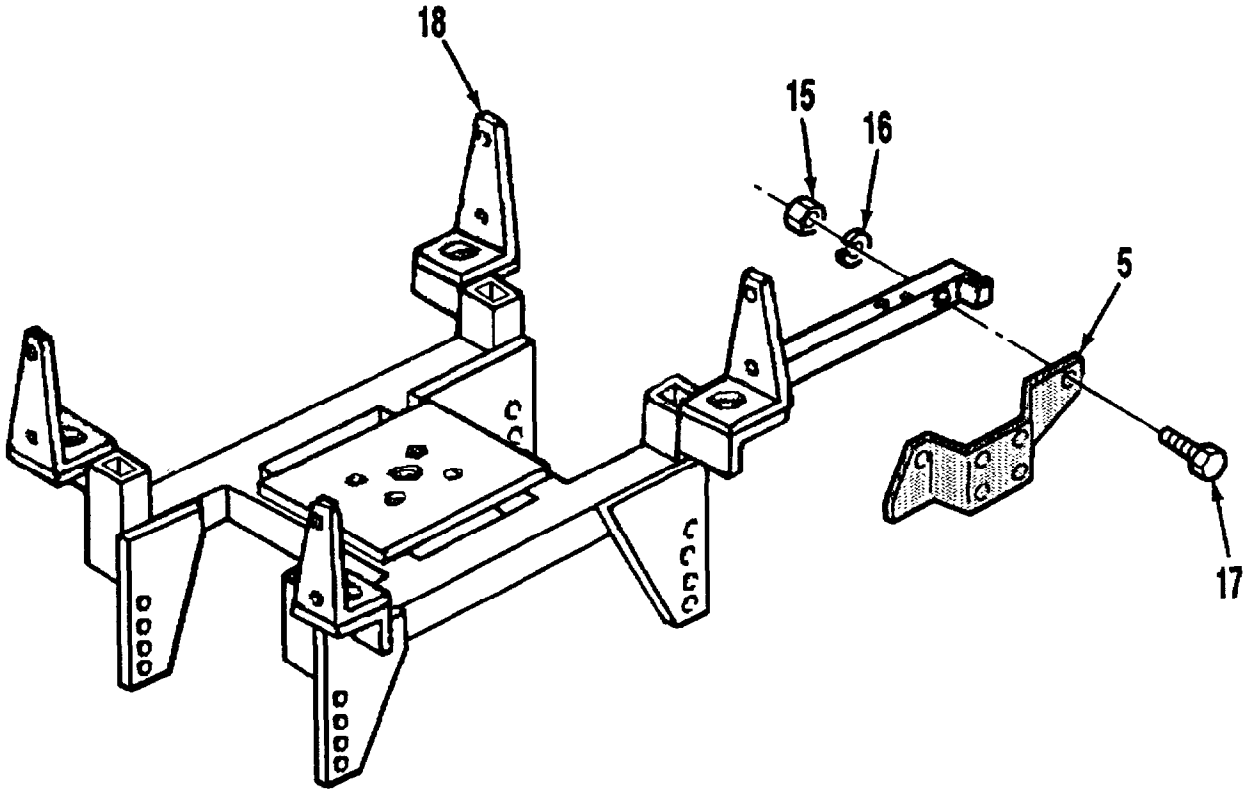

5. Mounting Bracket
15. Nut (2)
16. Lockwasher (2)
17. Capscrew (2)
18. Fan Mount/Radiator Support

Figure 2-13. Hand Priming Pump and Mounting Bracket
(Sheet 2 of 2)

(8) Remove two 90° elbows (10 and 11) from barrel (3).

(9) Remove washer (12) and nut (13) from barrel (3).

(10) Remove two nuts (15, Figure 2-13, Sheet 2 of 2), lockwashers (16), and capscrews (17) from mounting bracket (5) and fan mount/radiator support (18). Discard lockwashers (16).

(11) Remove mounting bracket (5) from fan mount/radiator support (18).

2-11. SPARE TIRE AND WHEEL ASSEMBLY AND LIFTING BRACKET

a. Spare Tire and Wheel Assembly

(1) Remove three lug nuts (1, Figure 2-14) securing spare tire and wheel assembly (2) to MK48.

(2) Attach lifting hook (3) to lifting bracket (4).

WARNING

The spare tire and wheel assembly is very heavy. To prevent personal injury, do not get between spare tire and wheel assembly and vehicle during removal procedures.

NOTE

Help from assistant(s) may be necessary to guide spare tire and wheel assembly (2) during removal procedures.

(3) Remove spare tire and wheel assembly (2) from MK48 using an overhead lifting device.

b. Lifting Bracket

(1) Remove three nuts (5) from lifting bracket (4).

(2) Remove lifting bracket (4) from spare tire and wheel assembly (2).

2-12. SPARE TIRE HOIST WINCH

a. Remove retaining pins (4, Figure 2-15) from hoist winch mounting studs (5).

b. Remove hoist winch arm assembly (1) and lower hoist winch column (2) from left side of spare tire and wheel assembly carrier (6).

c. Remove upper hoist winch column assembly (3) from right side of spare tire and wheel assembly carrier (6).

2-13. SPARE TIRE HOIST WINCH CABLE

a. Unwind spare tire hoist winch cable (1, Figure 2-16) from hoist winch drum (4).

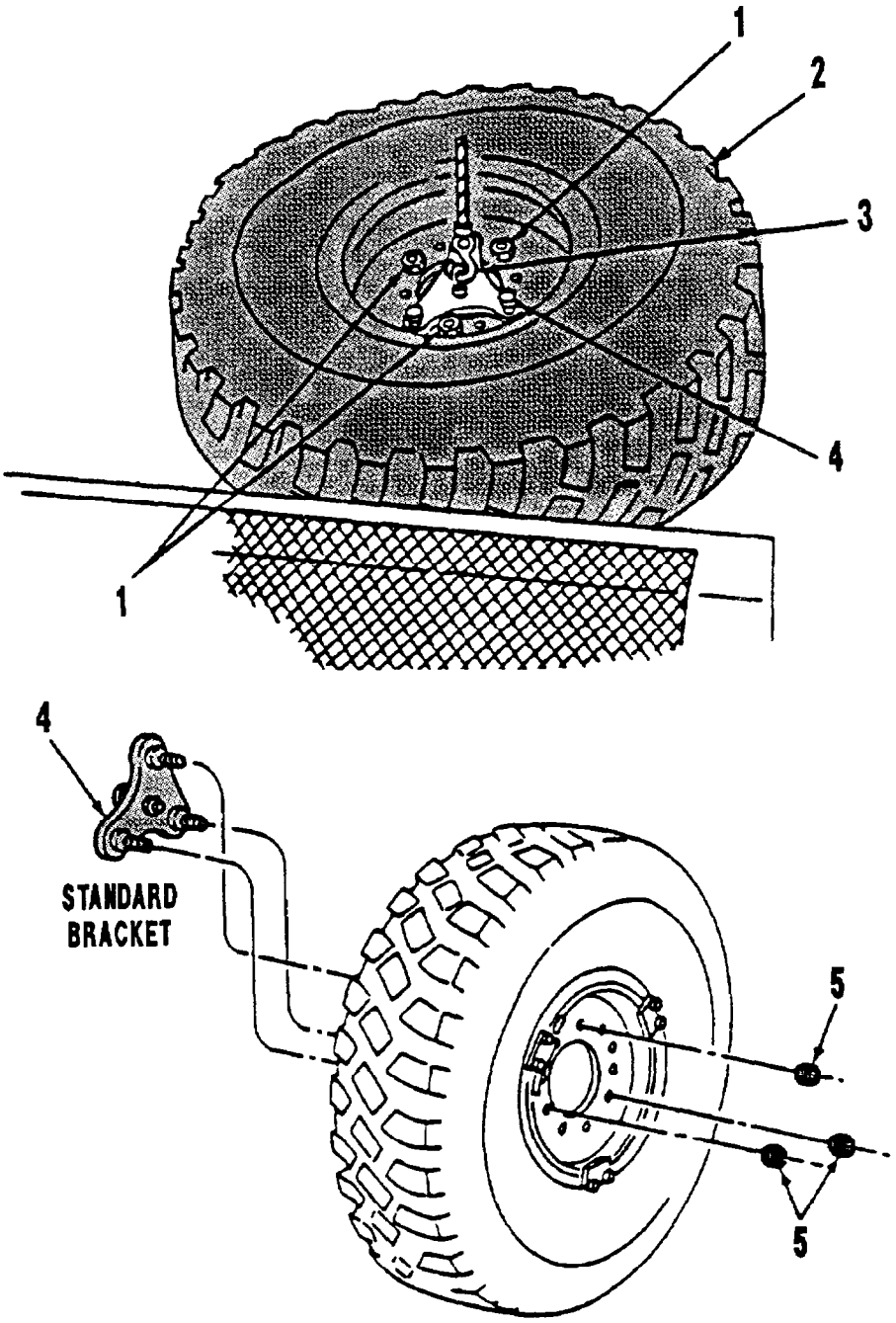

1. Lug Nut (3)
2. Spare Tire and Wheel Assembly
3. Lifting Hook
4. Lifting Bracket
5. Nut (3)

Figure 2-14. Spare Tire and Wheel Assembly and Lifting Bracket

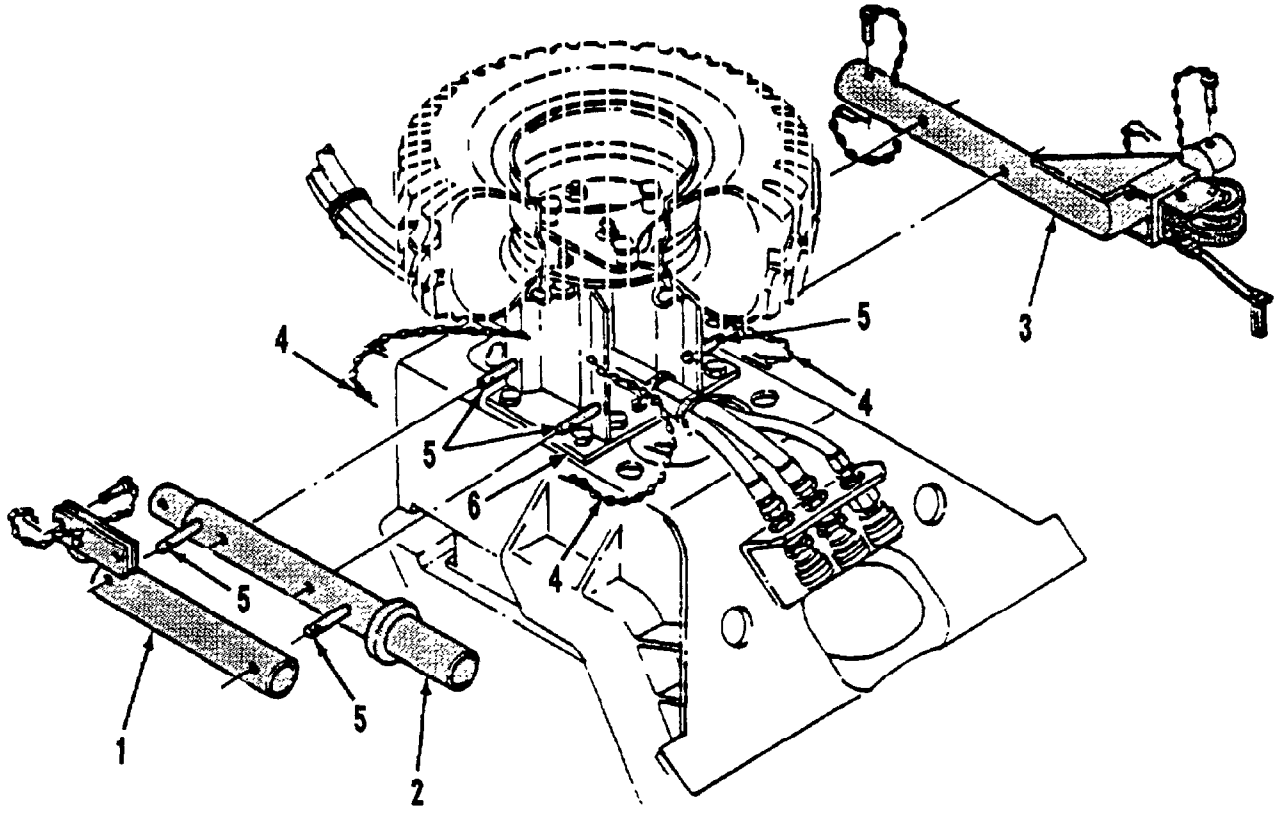

1. Hoist Winch Arm Assembly
2. Lower Hoist Winch Column
3. Upper Hoist Winch Column
4. Retaining Pin (4)
5. Mounting Stud (4)
6. Spare Tire and Wheel Assembly Carrier

Figure 2-15. Spare Tire Hoist Winch

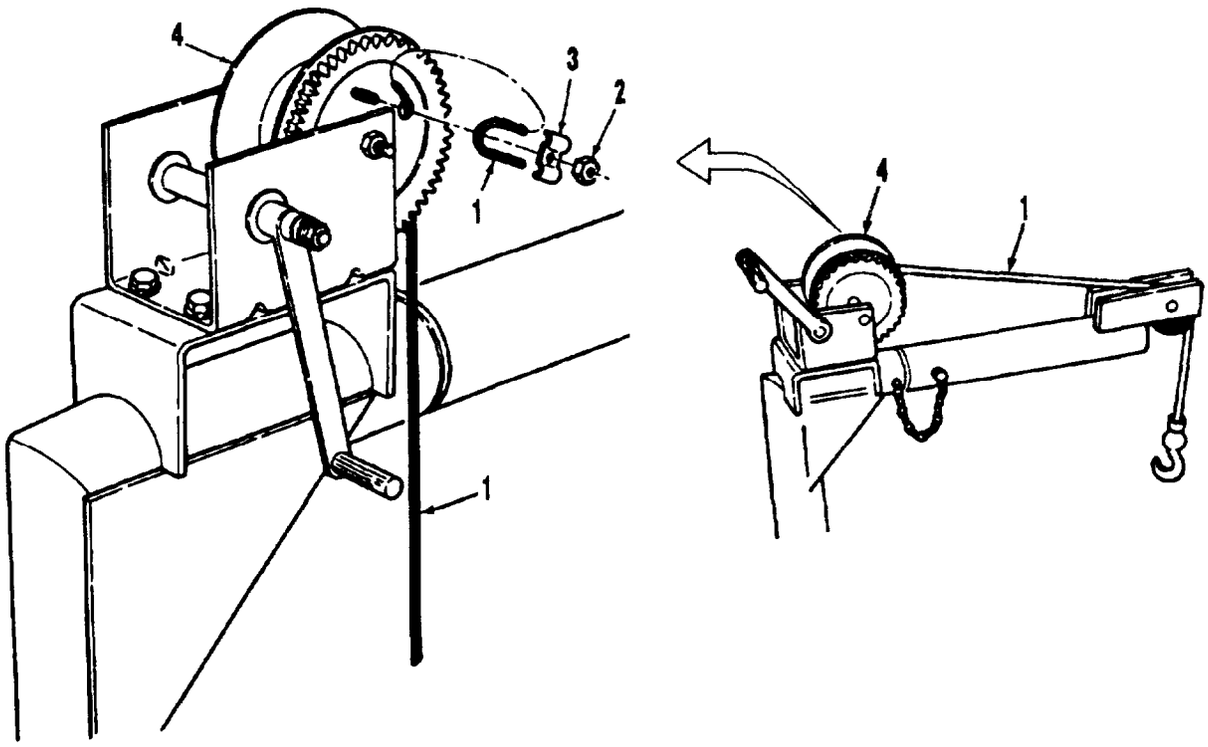

1. Spare Tire Hoist Winch Cable
2. Nut
3. Clamp
4. Hoist Winch Drum

Figure 2-16. Spare Tire Hoist Winch Cable

b. Remove nut (2) and clamp (3) from hoist winch drum (4).

c. Remove spare tire hoist winch cable (1) from hoist winch drum (4).

2-14. AIR LINES AND FITTINGS

WARNING

Air lines under pressure will move violently when removed. To prevent personal injury, drain all air pressure from system before removing pressurized components.

NOTE

Tag all air lines before removal to ensure proper installation.

a. Air Line Replacement

(1) Remove air line (1, Figure 2-17).

(2) Remove nuts (2) on both ends of air line (1) from fittings. Refer to sub-paragraph b or c below.

b. Compression Type Fittings

NOTE

Air line (1, Figure 2-18) is a compression type line. This air line has eyelets (4) inserted in the ends to help support the line. It also uses sleeves (3) to seal lines. When removing air lines (1), eyelet (4) may stay with air line (1) or may stay with fitting (5).

(1) Remove nut (2) from fitting (5).

(2) Remove eyelet (4) from air line (1).

(3) Cut air line (1) just behind sleeve (3). Discard sleeve (3).

(4) Slide nut (2) off air line (1).

(5) Remove fitting (5) from tapped hole.

c. Reusable Type Fittings

(1) Loosen nut (1, Figure 2-19) on fitting (5).

(2) Remove air line (2) from fitting (5).

(3) Remove nipple (4) and nut (3) from air line (2).

(4) Remove fitting (5) from tapped hole.

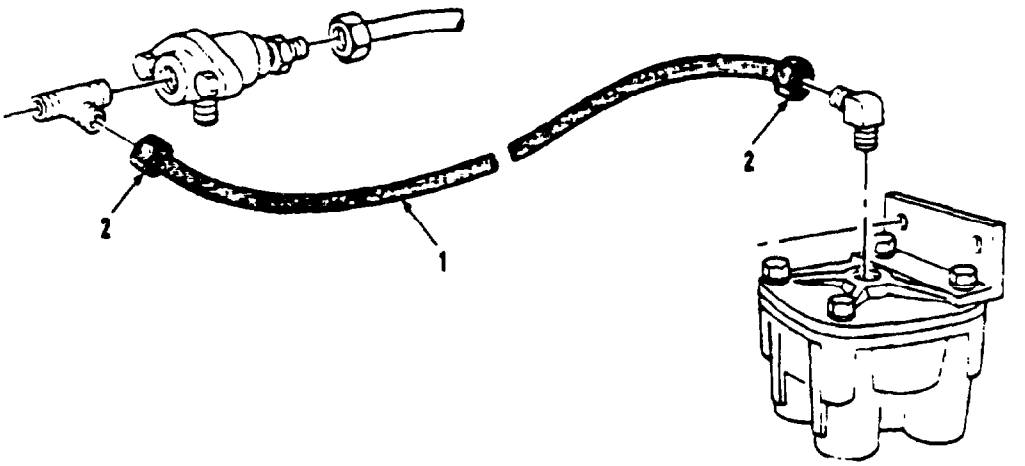

1. Air Line
2. Air Line Nut (2)

Figure 2-17. Air Line Replacement

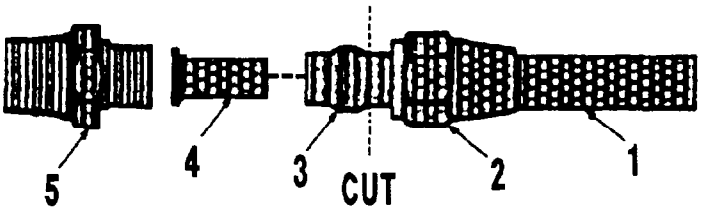

1. Air Line
2. Nut
3. Sleeve
4. Eyelet
5. Fitting

Figure 2-18. Compression Type Fittings

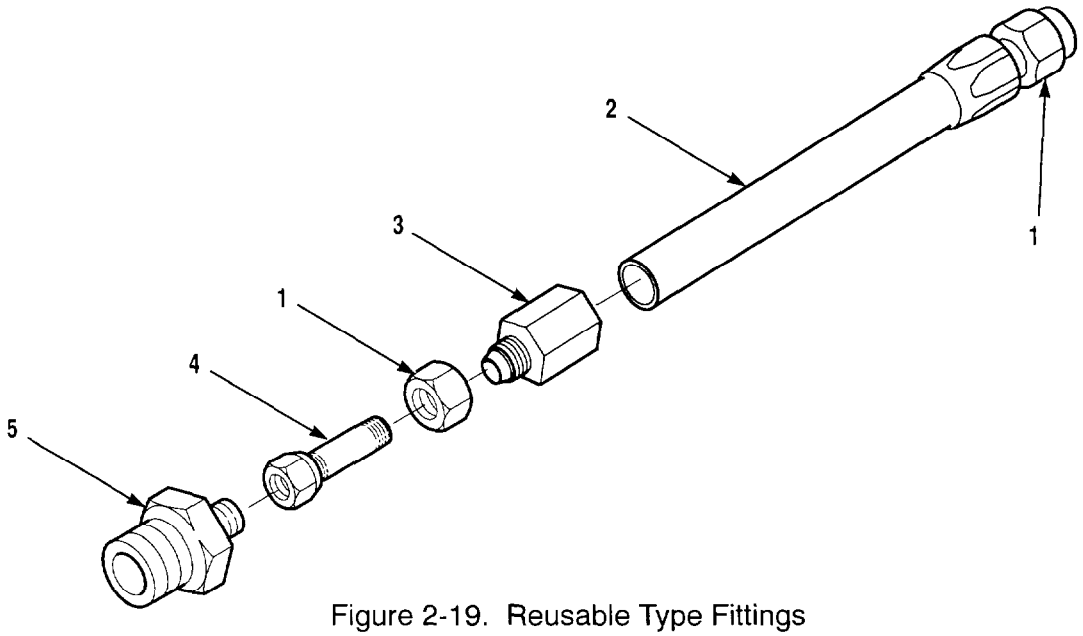

Figure 2-19. Reusable Type Fittings

2-15. SPRING BRAKE VALVE

WARNING

Air lines under pressure will move violently when removed. To prevent personal injury, drain all air pressure from system before removing pressurized components.

NOTE

Tag all air lines and wires before removal to ensure proper installation.

a. Remove four air lines (1, 3, 4, and 5, Figure 2-20) from 90° elbows (19, 12, 11, and 10) respectively.

b. Remove air line (2) from straight fitting (20).

NOTE

Mounting hardware for LVSA1 spring brake control valves have changed from a capscrew, lockwasher, and hex nut to a flanged type capscrew and locknut. When repairing a non-A1 vehicle, use the new style flanged mounting hardware to replace the old style hardware. Refer to TM 9-2320-297-24P for correct parts identification.

c. Remove two locknuts (7) and capscrews (9). Discard locknuts (7).

d. Remove spring brake valve (6) from mounting surface (21).

NOTE

Note position of 90° elbows and tee fitting to ensure proper installation.

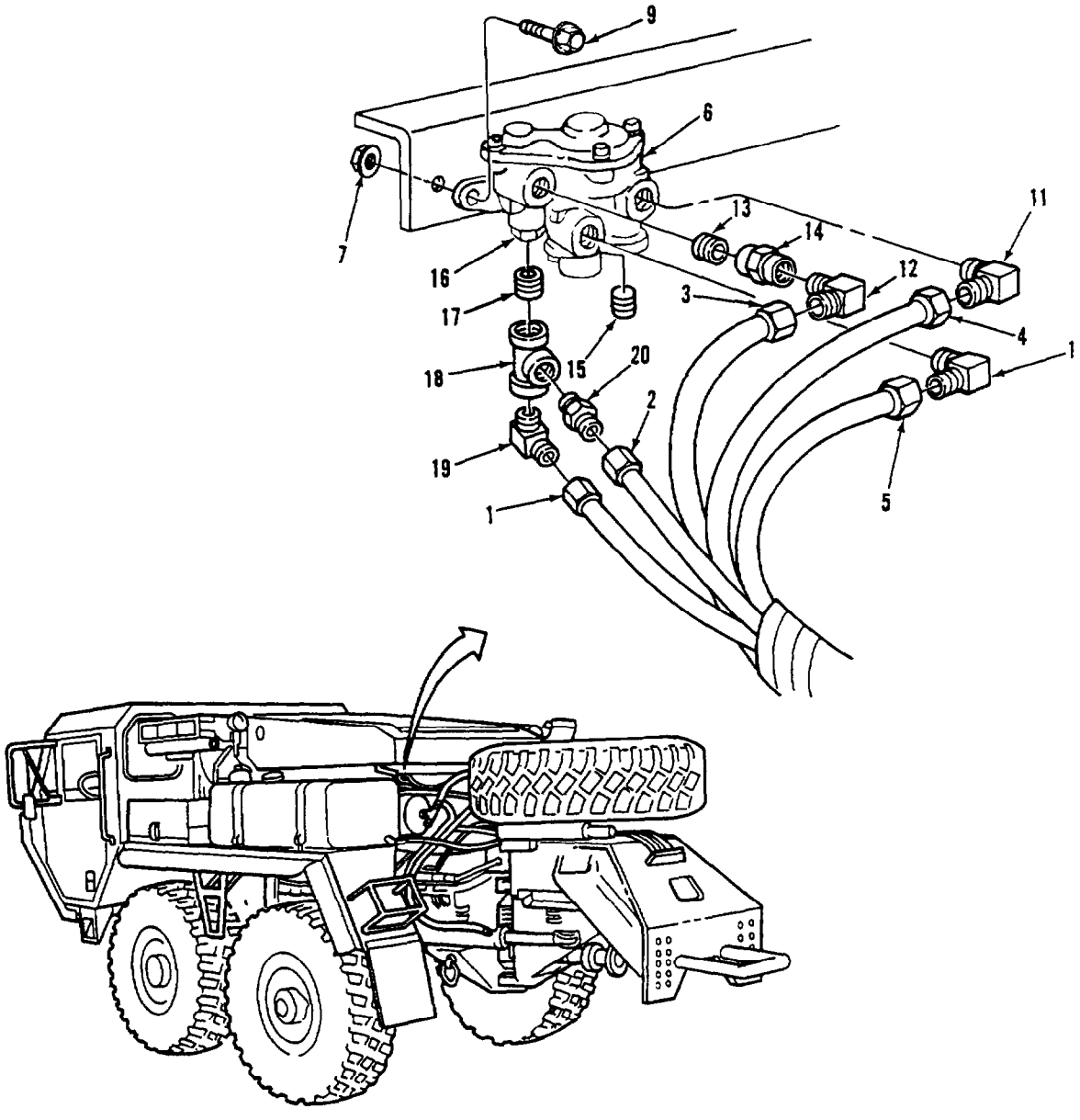

1. Air Line (No. 623A)
2. Air Line (No. 664)
3. Air Line (No. 621)
4. Air Line (No. 622)
5. Air Line (No. 612A)
6. Spring Brake Valve
7. Locknut (2)
8. Deleted
9. Capscrew (2)
10. 90° Elbow
11. 90° Elbow
12. 90° Elbow
13. Nipple
14. Reducer Coupling
15. Plug
16. Nut
17. Nipple
18. Tee Fitting
19. 90° Elbow
20. Straight Fitting
21. Mounting Surface

Figure 2-20. Spring Brake Valve

e. Remove 90° elbow (19) and straight fitting (20) from tee fitting (18).

f. Remove tee fitting (18) from nipple (17) and remove nipple (17) from nut (16).

g. Remove 90° elbow (12) from reducer coupling (14).

h. Remove reducer coupling (14) from nipple (13) and remove nipple (13) from spring brake valve (6).

i. Remove 90° elbows (10 and 11) from spring brake valve (6).

j. Remove plug (15) from spring brake valve (6).

2-16. QUICK RELEASE VALVE

WARNING

Air lines under pressure will move violently when removed. To prevent personal injury, drain all air pressure from system before removing pressurized components.

NOTE

Tag all air lines and wires before removal to ensure proper installation.

a. Remove air line (1, Figure 2-21) from 90° elbow (8) on top of quick release valve (2).

b. Remove air line (3) from 90° elbow (8) at rear of quick release valve (2).

c. Remove two locknuts (4), and capscrews (6) from quick release valve (2) and remove quick release valve (2) from vehicle. Discard locknuts (4).

d. Remove two 90° elbows (8) from quick release valve (2).

e. Remove stop light switch (7) from adapter (9).

f. Remove adapter (9) from quick release valve (2).

2-16.1 QUICK RELEASE VALVE REPLACEMENT (LVSA1 SERIES VEHICLES ONLY)

WARNING

Air lines under pressure will move violently when removed. To prevent personal injury, drain all air pressure from system before removing pressurized components.

NOTE

Tag air lines (1, 2, 5, and 6) before remvoal to insure proper installation.

Air lines (1, 2, 5, and 6) are compression type lines. These air lines have sleeves inserted into the ends to help support line. They also use eyelets to seal lines. When removing air lines the eyelet may stay with the line or may stay with the fitting. Refer to paragraph 13-21 for air line repair procedures.

(1) Remove air lines (1 and 2) from tops of left quick release valve (3) and right quick release valve (4).

(2) Remove air lines (5 and 6) from sides of left and right quick release valves (3 and 4).

(3) Remove two locknuts (7), capscrews (8), and left and right quick release valves (3 and 4). Discard locknuts (7).

(4) Remove 90 degree elbows (9) from tops of left and right quick release valves (3 and 5).

(5) Remove 45 degree elbow (10) form end of left quick release valve (3).

(6) Remove connector (11) from end of right quick release valve (4).

(7) Remove plugs (12) from ends of left and right quick release valves (3 and 4).

NOTE

Relay valve is removed with quick release valve bracket (16). To remove relay valve, refer to paragraph 2-143 in this manual.

(8) Remove two locknuts (13), capscrews (14), clamp (15), and quick release valve bracket (16). Discard locknuts (13).

(9) Secure relay valve as necessary to avoid damage to equipment.

2-17. ENGINE COVER, RADIATOR GRATE, AND RADIATOR GRILLE

a. Engine Cover

(1) Remove 11 locknuts (2, Figure 2-22) and capscrews (1) while assistant holds engine cover (3). Discard locknuts (2).

(2) Remove engine cover (3) from hinge (4) and vehicle.

b. Radiator Grate

(1) Remove ten capscrews (2, Figure 2-23), lockwashers (3), and washers (4) from radiator grate (1). Discard lockwashers (3).

(2) Remove radiator grate (1) from radiator grille (5) with help from assistant(s).

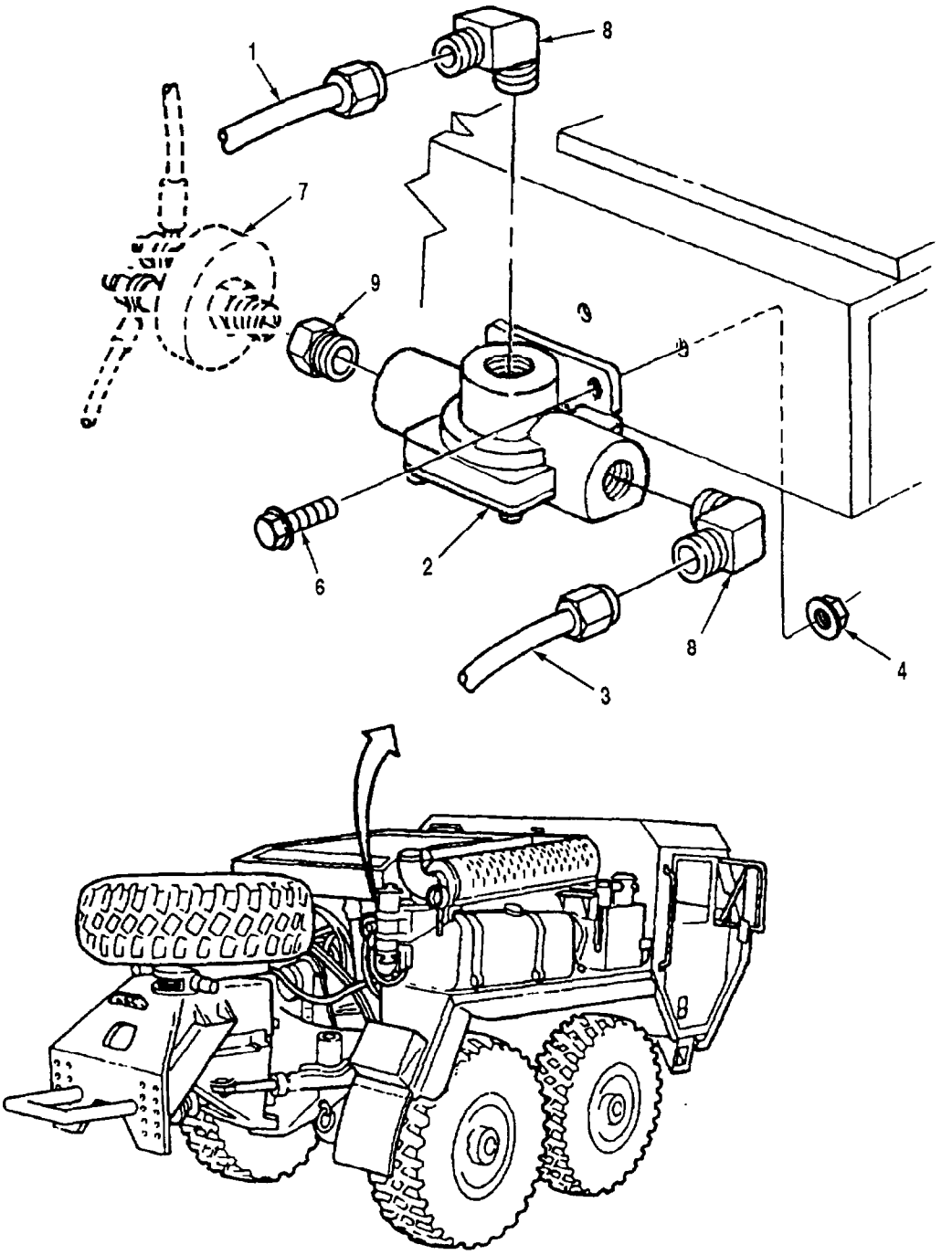

1. Air Line
2. Quick Release Valve
3. Air Line
4. Locknut (2)
5. Deleted
6. Capscrew (2)
7. Stop Light Switch
8. 90° Elbow (2)
9. Adapter

Figure 2-21. Quick Release Valve

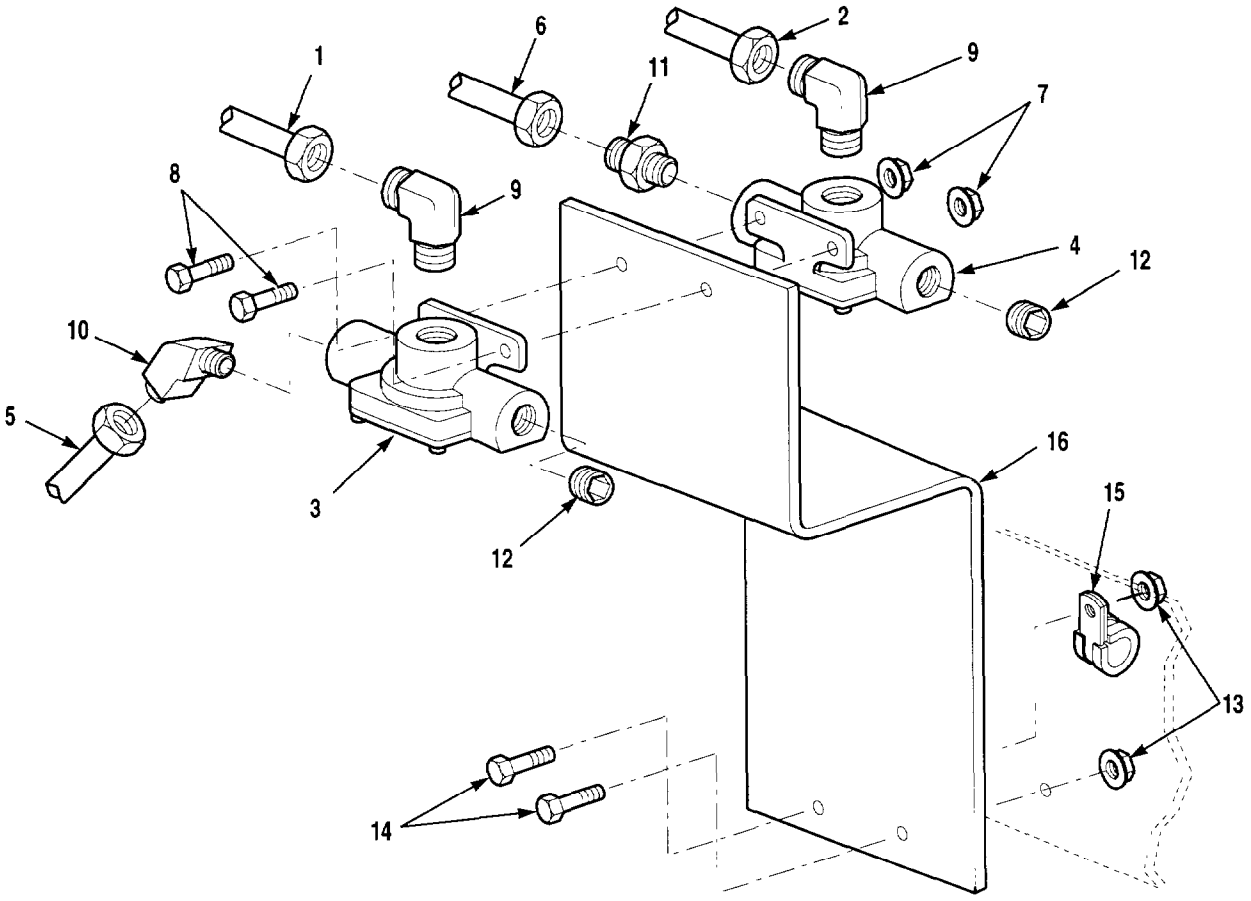

1. Air Line (No. 2488)
2. Air Line (No. 2623)
3. Left Quick Release Valve
4. Right Quick Release Valve
5. Air Line (No. 2488)
6. Air Line (No. 2623)
7. Locknut (2)
8. Capscrew (2)
9. 90 Degree Elbow (2)
10. 45 Degree Elbow
11. Connector
12. Plug (2)
13. Locknut (2)
14. Capscrew (2)
15. Clamp
16. Quick Release Valve Bracket

Figure 2-21. Quick Release Valve (LVSA1 Series Vehicles Only)

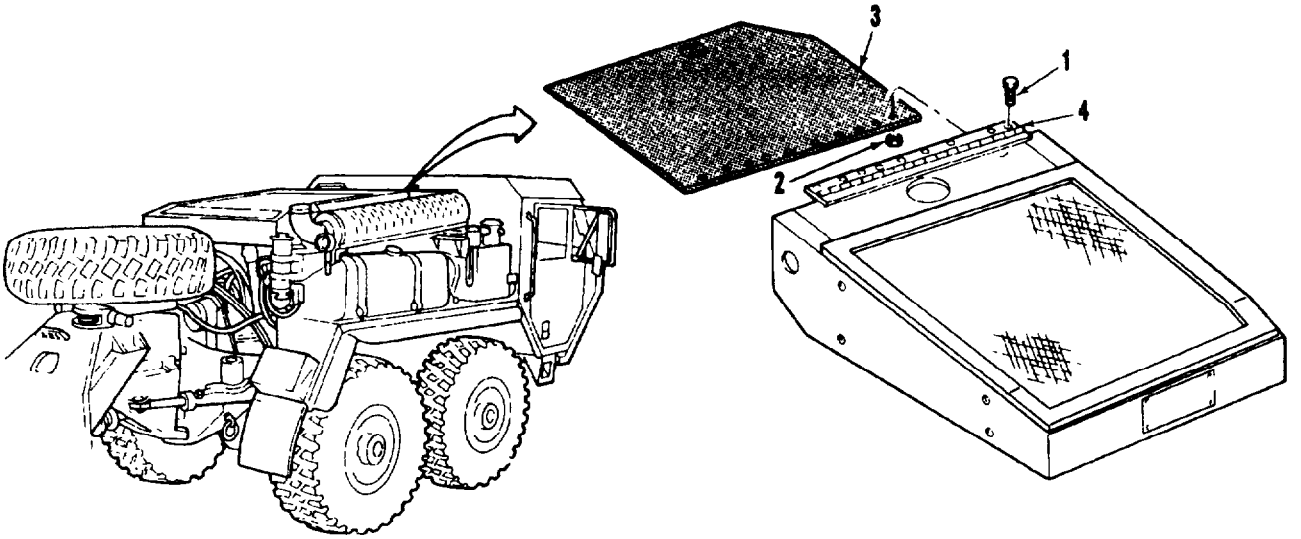

1. Capscrew (11)
2. Locknut (11)
3. Engine Cover
4. Hinge

Figure 2-22. Engine Cover

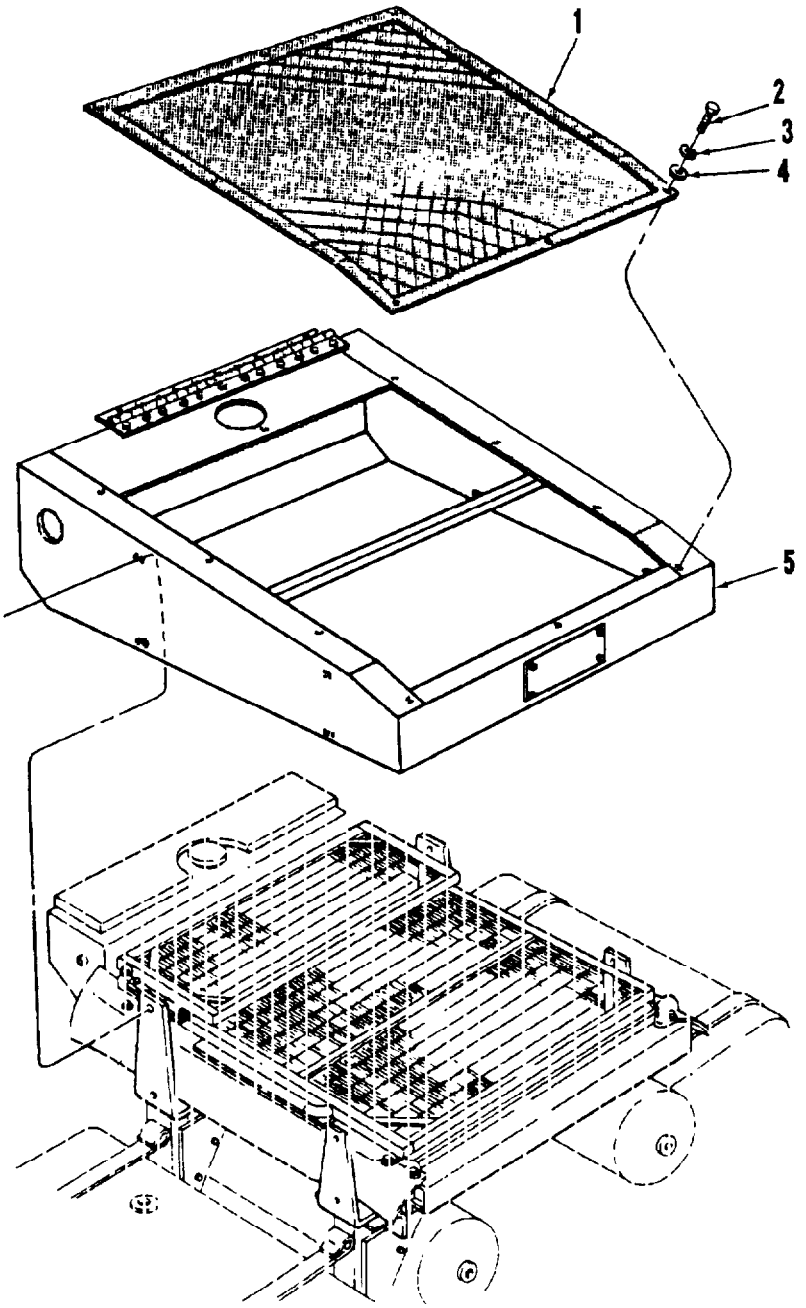

1. Radiator Grate
2. Capscrew (10)
3. Lockwasher (10)
4. Washer (10)
5. Radiator Grille

Figure 2-23. Radiator Grate

c. Radiator Grille

WARNING

The radiator grille is very heavy and awkward to handle. To prevent personal injury, use an overhead lifting device to lift radiator grille from vehicle. Help from assistant(s) may be necessary to guide radiator grille during removal procedures.

(1) Remove eight capscrews (1, Figure 2-24), lockwashers (2), and washers (3)

NOTE

Perform Step (1.1) on LVSA1 series vehicles only.

(1.1) Remove six capscrews (1), lockwashers (2), and washers (3) from radiator grille hold down (6). Discard lockwashers (2)

(2) Lift radiator grille (4) off radiator assembly (5) using an overhead lifting device.

2-18. HYDRAULIC HOSES AND FITTINGS

a. Hoses

(1) Clean pipe thread fitting (1, Figure 2-25 and hose nut (2) before removing hose (3)

NOTE

To prevent oil spillage, plug all fittings and openings when hydraulic hoses are removed.

(2) Tag and remove hoses.

b. Fittings

WARNING

To prevent personal injury and damage to fittings, use proper size wrenches when removing fittings.

NOTE

Place wrenches on hex portion of straight fittings and on wrench pad of shaped fittings.

(1) Fittings: Straight and Tapered Thread

(a) Place wrench on hex portion of fitting (1 or 4).

(b) Turn fitting (1 or 4) in a counterclockwise direction.

(c) Remove fitting (1 or 4).

NOTE

Threads on straight thread fitting (4) will be straight on threaded end of fitting. Some straight threaded fittings (4) will have an O-ring (5) to aid in sealing.

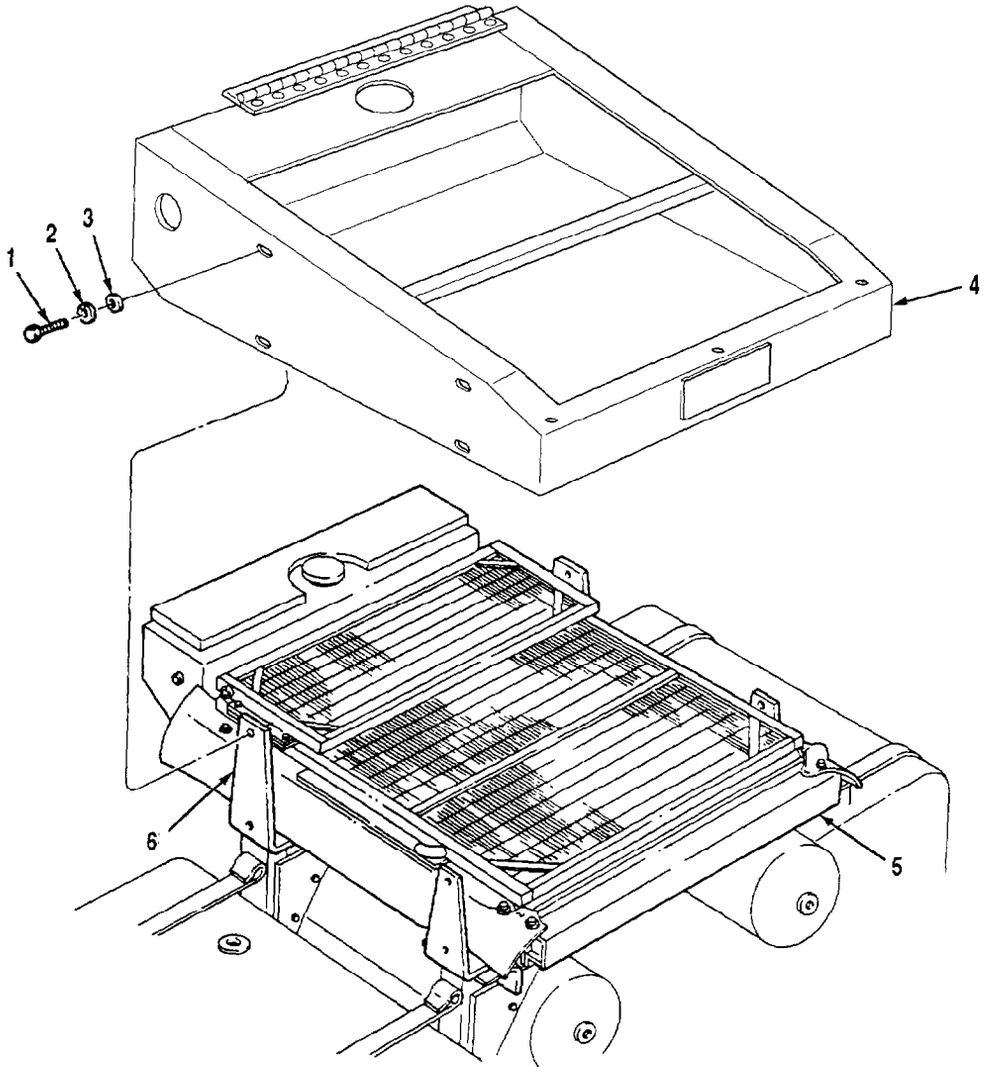

1. Capscrew (8)
■ 1. Capscrew (6)*
2. Lockwasher (8)
■ 2. Lockwasher (6)*
3. Washer (8)
■ 3. Washer (6)*
4. Radiator Grille
5. Radiator Assembly
6. Radiator Grille Hold Down

■ * LVSA1 Series Vehicles Only

Figure 2-24. Radiator Grille

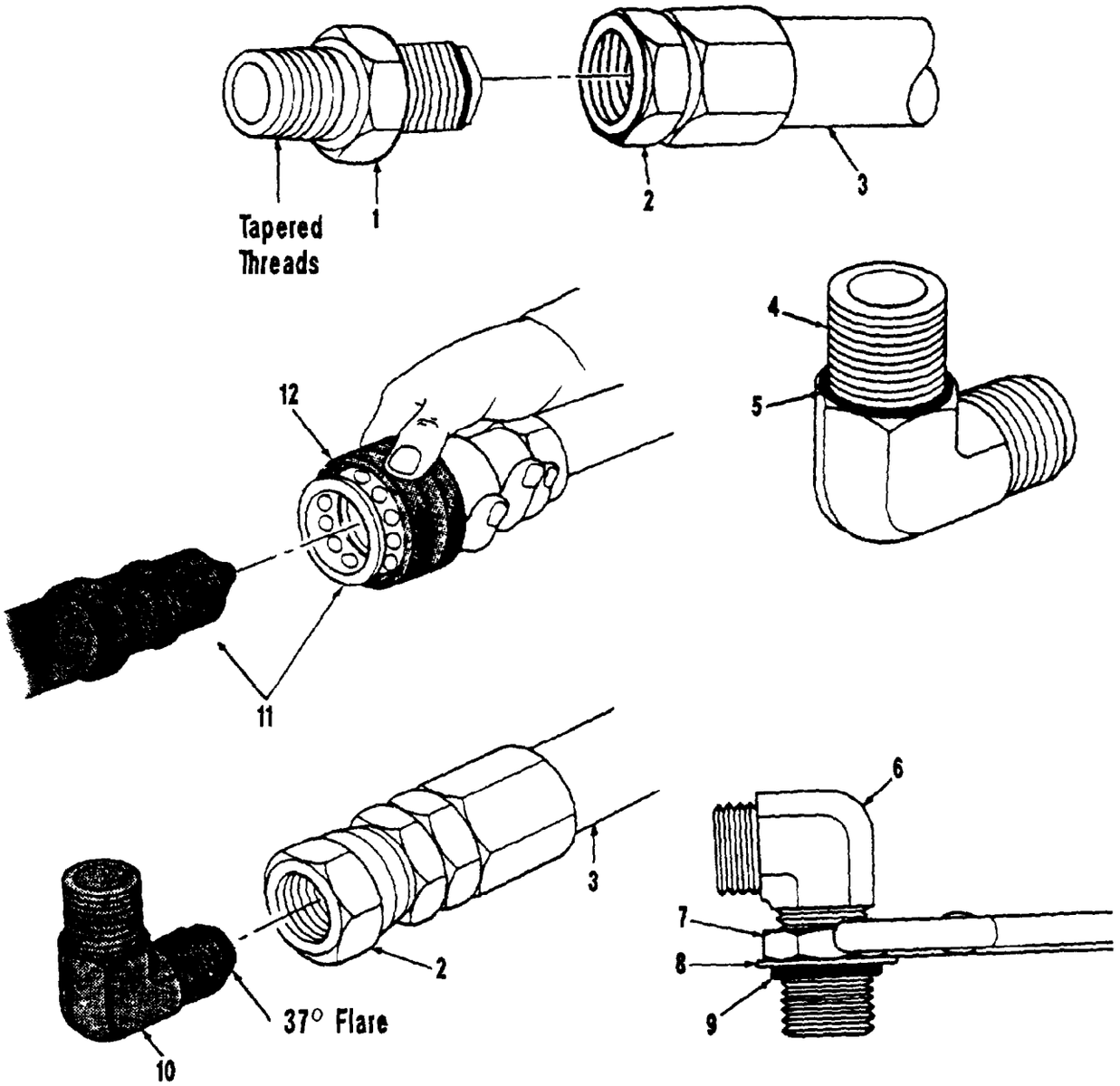

1. Pipe Thread Fitting
2. Hose Nut
3. Hose
4. Straight Thread Fitting
5. O-Ring
6. Boss Fitting
7. Nut
8. Washer
9. O-Ring
10. J.I.C. Flared Fitting
11. Quick Coupler
12. Locking Ring

Figure 2-25. Hydraulic Hoses and Fittings

(2) Boss Fittings

NOTE

Each boss fitting (6, Figure 2-25) has an O-ring (9), washer (8), and nut (7).

(a) Hold boss fitting (6) in position and loosen nut (7).

(b) Place wrench on wrench pad of boss fitting (6).

(c) Turn boss fitting (6) in a counterclockwise direction.

(d) Remove boss fitting (6) from boss.

(3) J.I.C. Flared Fittings

NOTE

J.I.C. flared fittings (10) have 37 degree flared ends.

(a) Loosen hose nut (2) and remove hose (3) from J.I.C. flared fitting (10).

(b) Place wrench on wrench pad of J.I.C. flared fitting (10).

(c) Turn J.I.C. flared fitting (10) in counterclockwise direction.

(d) Remove J.I.C. flared fitting (10).

(4) Quick Couplers. To disconnect, pull locking ring (12) back and pull quick couplers (11) apart.

NOTE

Quick couplers (11) are used to ease connection and disconnection of hoses. They also prevent the loss of hydraulic oil when hoses are disconnected.

(5) Flange Block

NOTE

The flange block (4, Figure 2-26) is used where hoses have to be mounted to a flat surface.

(a) Remove four capscrews (6), lockwashers (5), and two flange halves (1). Discard lockwashers (5).

(b) Remove flange (2) and O-ring (3) from flange block (4). Discard O-ring (3).

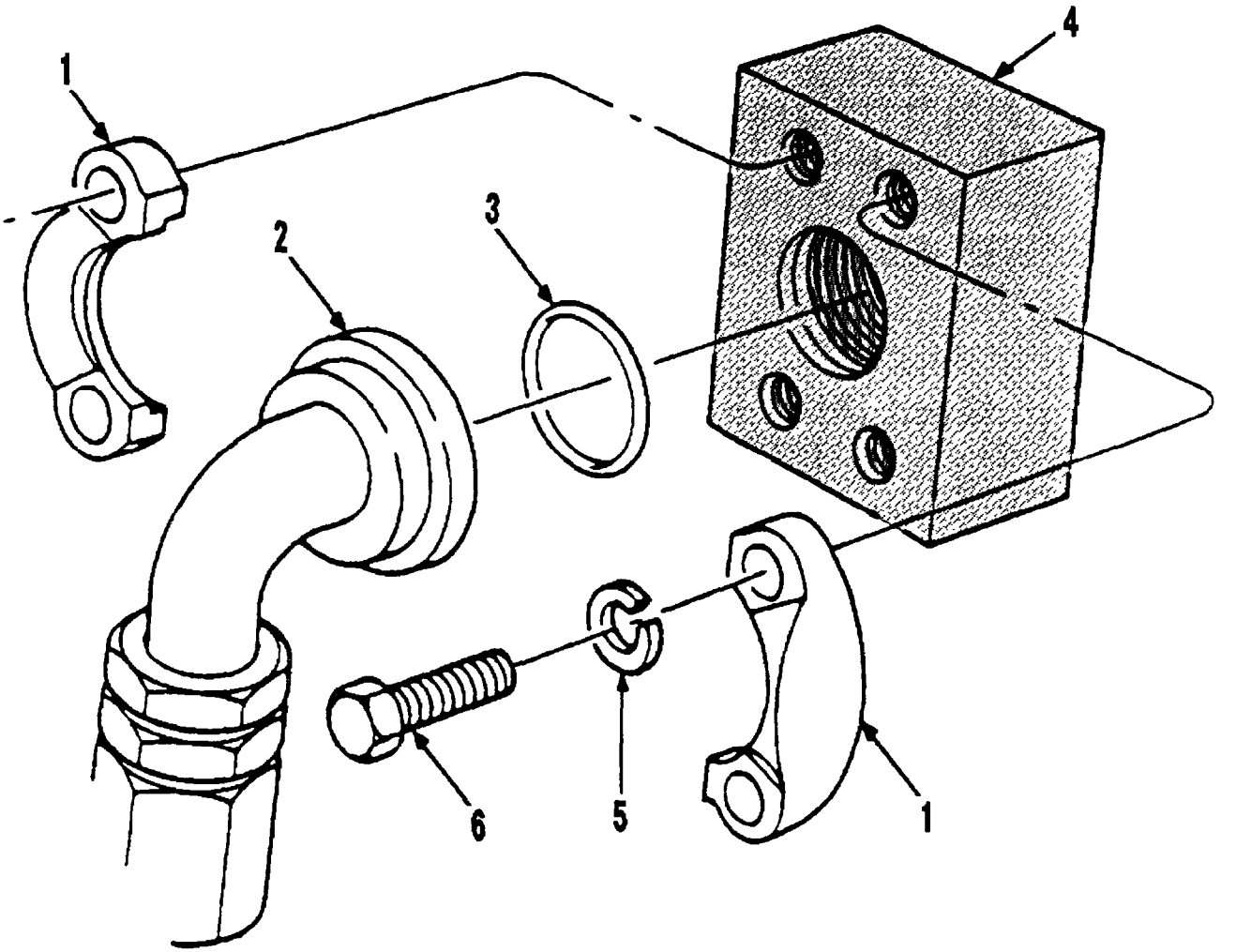

1. Flange Half (2)
2. Flange
3. O-Ring
4. Flange Block
5. Lockwasher (4)
6. Capscrew (4)

Figure 2-26. Flange Block

2-19. HYDRAULIC OIL COOLER

WARNING

Hydraulics may be under pressure and can spurt out when lines are disconnected. To prevent personal injury, crack all lines slowly, keep face clear of lines, and wear safety glasses when working with hydraulic system.

Hydraulic oil cooler is very heavy and awkward to handle. To prevent personal injury, use an overhead lifting device to remove hydraulic oil cooler from vehicle. Help from assistant(s) may be necessary to guide hydraulic oil cooler during removal procedures.

CAUTION

Be extremely careful not to damage cooling fins when removing hydraulic oil cooler.

NOTE

Tag all hydraulic lines before removal to ensure proper installation.

Place a container under hydraulic oil lines to catch any hydraulic oil that might spill when lines are removed.

a. Remove hydraulic line (1, Figure 2-27) from elbow (9) on hydraulic oil cooler (7).

b. Remove hydraulic line (2) from elbow (11) on hydraulic oil cooler (7).

c. Remove elbows (9 and 11) and O-rings (10 and 12) from hydraulic oil cooler (7). Discard O-rings (10 and 12).

d. Remove four nuts (4), lockwashers (5), washers (6), capscrews (3), and four washers (6) from mounting brackets (8). Discard lockwashers (5).

e. Lift and remove hydraulic oil cooler (7), using an overhead lifting device and help from assistant(s), from mounting brackets (8).

2-20. TRANSMISSION OIL COOLER

WARNING

The transmission oil cooler is very heavy and awkward to handle. To prevent personal injury, use an overhead lifting device to remove transmission oil cooler from vehicle. Help from assistant(s) may be necessary to guide transmission oil cooler during removal procedures.

CAUTION

Be extremely careful not to damage cooling fins when removing transmission oil cooler.

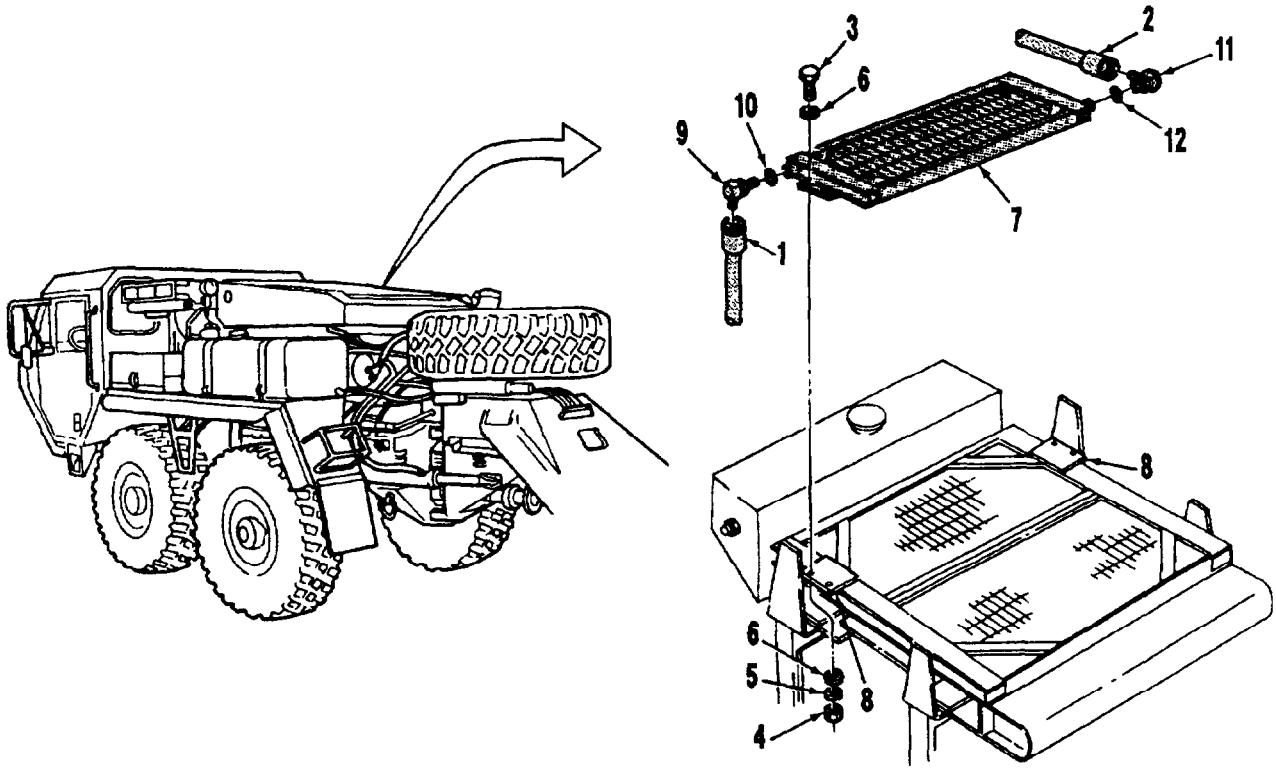

1. Hydraulic Line
2. Hydraulic Line
3. Capscrew (4)
4. Nut (4)
5. Lockwasher (4)
6. Washer (8)
7. Hydraulic Oil Cooler
8. Mounting Bracket (2)
9. Elbow
10. O-Ring
11. Elbow
12. O-Ring

Figure 2-27. Hydraulic Oil Cooler

NOTE

Tag all transmission lines before removal to ensure proper installation.

Place a container under transmission oil lines to catch any transmission oil that might spill when lines are disconnected.

a. Remove two transmission oil lines (1, Figure 2-28) from 90° elbow (2) and straight fitting (6).

b. Remove 90° elbow (2) and straight fitting (6) from transmission oil cooler (7).

c. Remove six capscrews (3), lockwashers (4), and washers (5). Discard lockwashers (4).

d. Remove transmission oil cooler (7) from radiator (8) using an overhead lifting device.

2-21. COOLING SYSTEM HOSES AND TUBES

NOTE

Perform step a(1) to allow removal of radiator (4, Figure 2-29). Perform remaining steps a(2) through a(9) as hoses and tubes become accessible.

Hose clamps (1, 5, 7 and 14) have changed from a worm type clamp to a constant torque "Breeze" type clamp. When repairing a non-A1 vehicle, use the new style constant torque clamp to replace the old style clamp. Refer to TM 9-2320-297-24P for correct part identification.

a. Lower Radiator Hoses and Tubes

(1) Loosen two hose clamps (1) and slide hose (2) down on tube (3) to clear radiator (4).

(2) Loosen two hose clamps (5) and remove tube (3), hose (2), and elbow (6) from tube (9).

(3) Remove hose (2) and elbow (6) from tube (3).

(4) Remove four hose clamps (1 and 5) from hose (2) and elbow (6).

(5) Loosen two hose clamps (7) on hose (8) and slide hose (8) back on tube (9).

NOTE

Note location of nylon ties (10) to ensure proper installation.

(6) Remove nylon ties (10) as required.

(7) Remove three capscrews (12), lockwashers (13), clamps (11), and tube (9). Discard lockwashers (13).

(8) Remove hose clamps (7) from hose (8) and remove hose (8) from tube (9).

(9) Loosen two hose clamps (14) and slide hose (15) off of water pump (17) and down on tube (16).

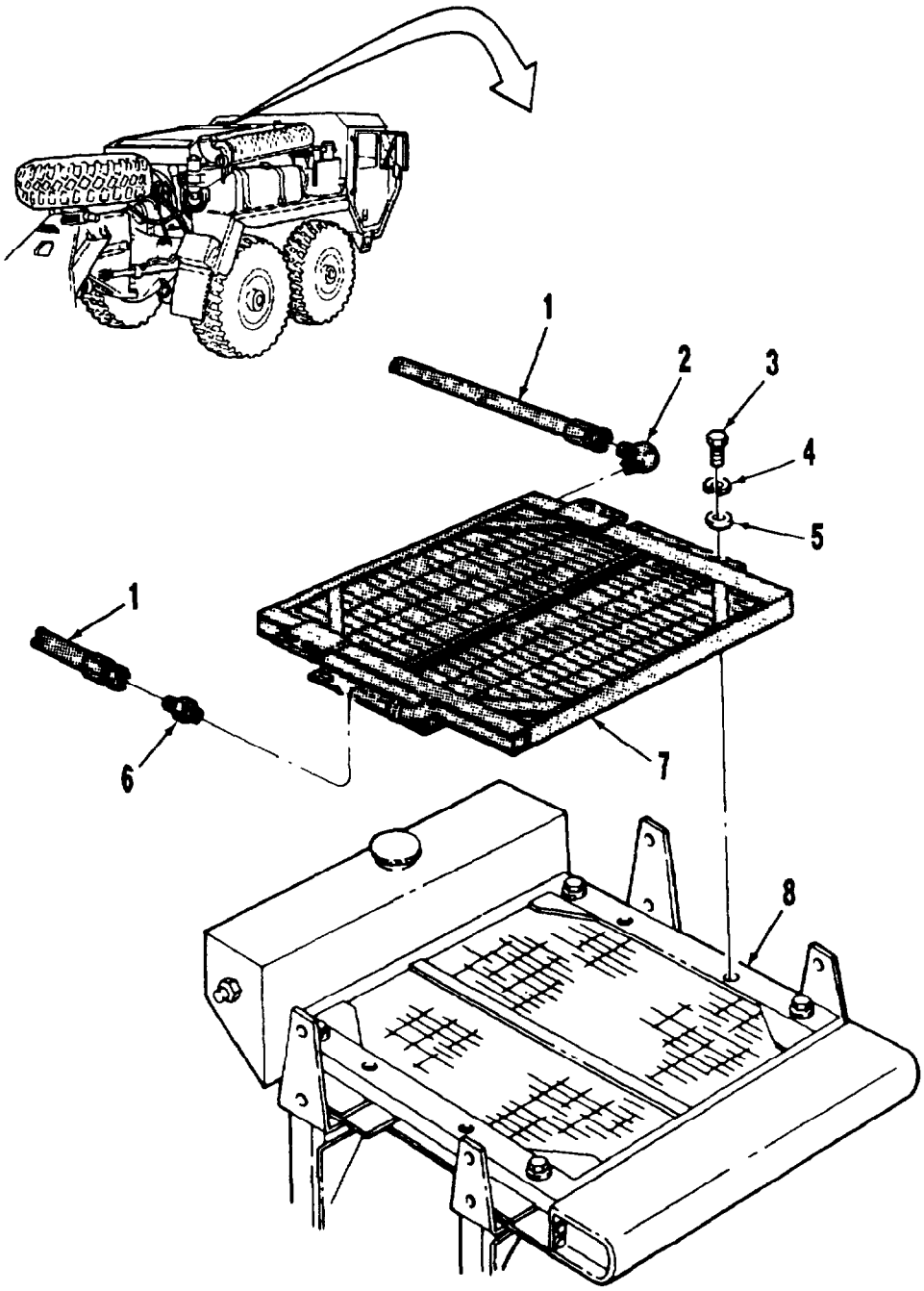

1. Transmission Oil Line (2)
2. 90° Elbow
3. Capscrew (6)
4. Lockwasher (6)
5. Washer (6)
6. Straight Fitting
7. Transmission Oil Cooler
8. Radiator

Figure 2-28. Transmission Oil Cooler

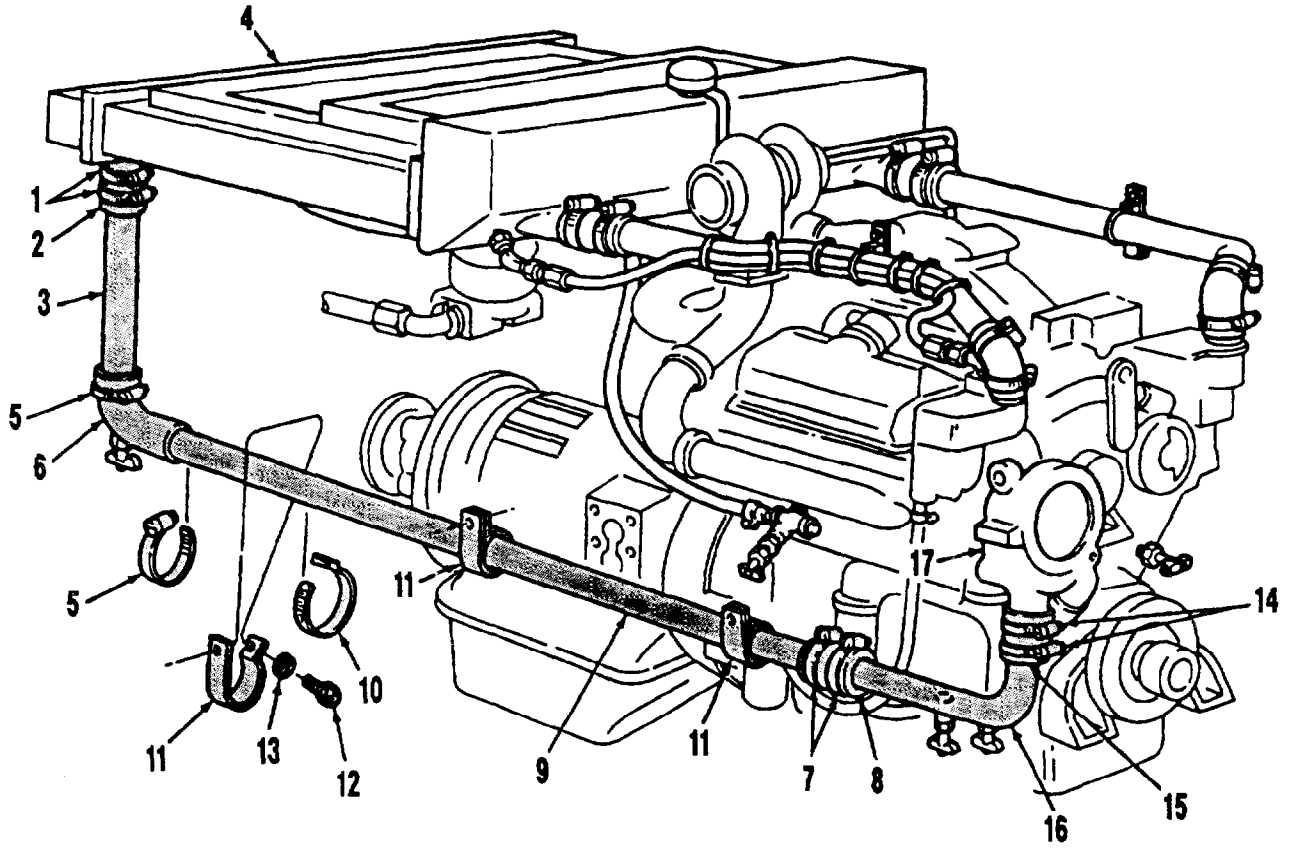

1. Hose Clamp (2)
2. Hose
3. Tube
4. Radiator
5. Hose Clamp (2)
6. Elbow
7. Hose Clamp (2)
8. Hose
9. Tube
10. Nylon Tie(s)
11. Clamp (3)
12. Capscrew (3)
13. Lockwasher (3)
14. Hose Clamp (2)
15. Hose
16. Tube
17. Water Pump

Figure 2-29. Lower Radiator Hoses and Tubes

(10) Remove tube (16) and hose (15).

(11) Remove hose (15) and two hose clamps (14) from tube (16).

b. Upper Radiator Hoses and Tubes

NOTE

Perform steps b(1, 5, 11, 12, 14, 15, and 17) to allow removal of radiator (25, Figure 2-30). Perform steps b(2) through b(4) and b(6) through b(10) as hoses and tubes become accessible.

Note location of nylon ties (11) to ensure proper installation and remove nylon ties (11) as required.

(1) Loosen two hose clamps (8) and slide hose (9) back on left tube (10).

(2) Loosen two hose clamps (13) on elbow (14).

(3) Remove two nuts (7), lockwashers (6), and clamp (4) from bracket (5). Discard lockwashers (6).

(4) Remove left tube (10), hose (9), and elbow (14) from left thermostat housing (16).

(5) Remove hose clamps (8) from hose (9) and remove hose (9) from left tube (10).

(6) Remove elbow (14) and two hose clamps (13) from left tube (10).

(7) Loosen two hose clamps (19) and slide hose (18) back on tube (20).

(8) Loosen two hose clamps (12).

(9) Remove two nuts (3), lockwashers (2), and clamp (1). Discard lockwashers (2).

(10) Remove right tube (20), hose (18), and elbow (15) from right thermostat housing (17).

(11) Remove hose (18), two hose clamps (19), elbow (15), and two hose clamps (12) from right tube.

(12) Loosen clamp (28) on radiator (25) end.

(13) Remove hose (21) from radiator (25).

(14) Repeat step (11) above for other end of hose (21) at drain valve (30).

(15) Loosen hose nut (23) on radiator (25) end.

(16) Remove by-pass hose (22) from 45° elbow (24).

(17) Repeat step (14) above to remove other end of by-pass hose (22) from 90° elbow (29).

(18) Remove overflow hose (26) from overflow tube (27).

NOTE

Hose clamps (8, 12, 13 and 19) have changed from a worm type clamp to a constant torque "Breeze" type clamp. When repairing a non-A1 vehicle, use the new style constant torque clamp to replace the old style clamp. Refer to TM 9-2320-297-24P for correct part identification.

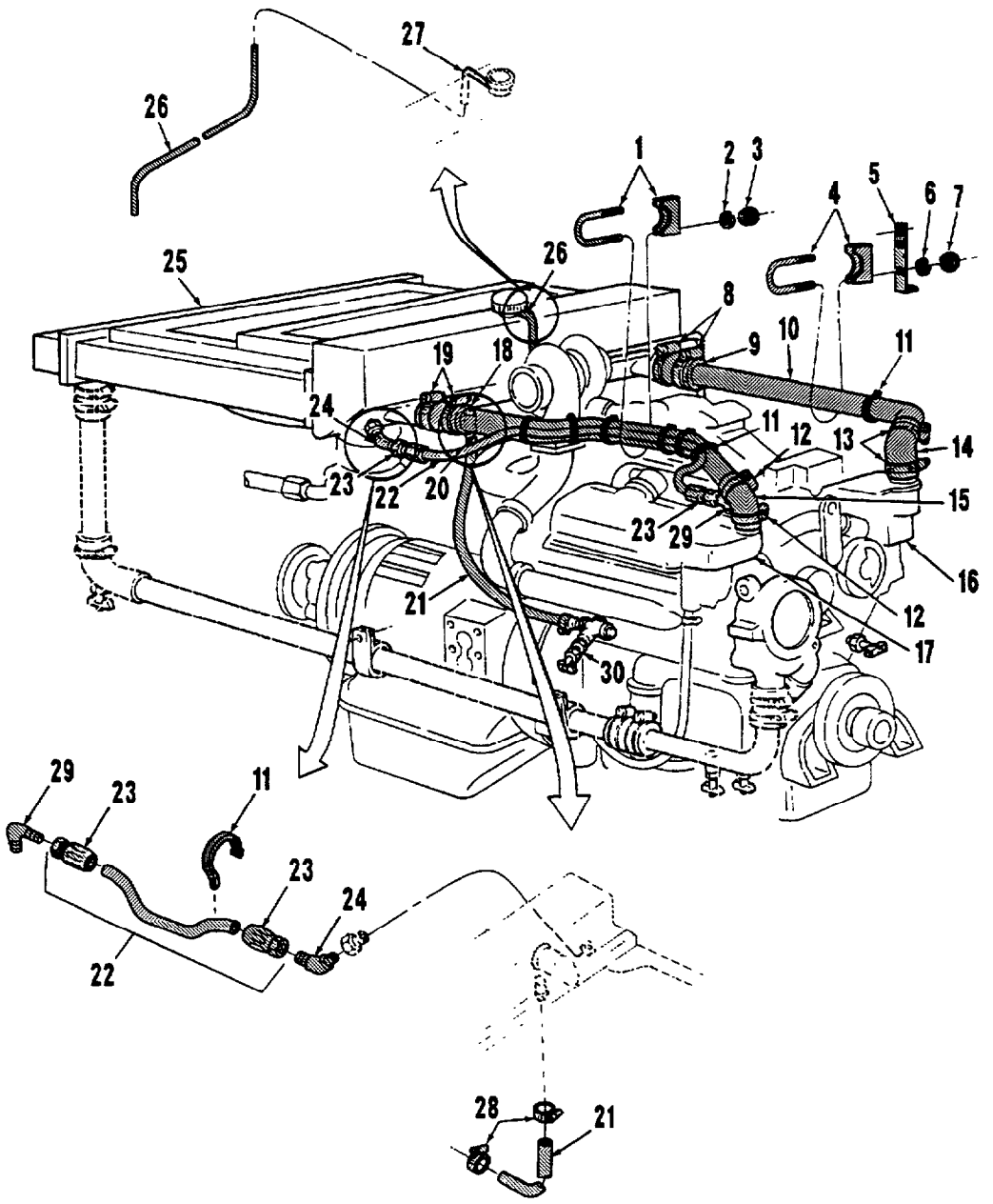

1. Clamp
2. Lockwasher (2)
3. Nut (2)
4. Clamp
5. Bracket
6. Lockwasher (2)
7. Nut (2)
8. Hose Clamp (2)
9. Hose
10. Left Tube
11. Nylon Tie(s)
12. Hose Clamp (2)
13. Hose Clamp (2)
14. Elbow
15. Elbow
16. Left Thermostat Housing
17. Right Thermostat Housing
18. Hose
19. Hose Clamp (2)
20. Right Tube
21. Hose
22. By-Pass Hose
23. Hose Nut
24. 45° Elbow
25. Radiator
26. Overflow Hose
27. Overflow Tube
28. Clamp (2)
29. 90° Elbow
30. Drain Valve

Figure 2-30. Upper Radiator Hoses and Tubes

2-22. RADIATOR AND FAN SHROUD

a. Radiator

(1) Remove four locknuts (5, Figure 2-31), washers (4), and lower mounting biscuits (3) from fan mount/radiator support (2). Discard locknuts (5).

WARNING

The radiator is very heavy and awkward to handle. To prevent personal injury, use an overhead lifting device to remove radiator from vehicle. Help from assistant(s) may be necessary to guide radiator during removal procedures.

CAUTION

Be extremely careful not to damage cooling fins when removing radiator.

NOTE

Place a container under radiator outlet neck to catch any coolant that might spill when radiator is removed.

(2) Remove radiator (1) from fan mount/radiator support (2) using an overhead lifting device.

b. Fan Shroud

(1) Remove six capscrews (1, Figure 2-32), lockwashers (2), washers (3), two nuts (13), lockwashers (15), and two rubber flaps (25) from radiator (4). Discard lockwashers (2 and 15).

(2) Remove nut (8), lockwasher (9), and bracket (10). Discard lockwasher (9).

(3) Support radiator (4) on wooden blocks with fan shroud (11) facing up.

(4) Remove four upper mounting biscuits (14) from rear and front radiator mounting brackets (12 and 24).

NOTE

Matchmark rear and front radiator mounting brackets (12 and 24) before removal.

(5) Remove four capscrews (21), lockwashers (22), washers (23), and two front radiator mounting brackets (24) from radiator (4). Discard lockwashers (22).

(6) Remove four capscrews (20), lockwashers (19), washers (18), and two rear radiator mounting brackets (12) from radiator (4). Discard lockwashers (19).

(7) Remove two capscrews (17) and lockwashers (16) from fan shroud (11). Discard lockwashers (16).

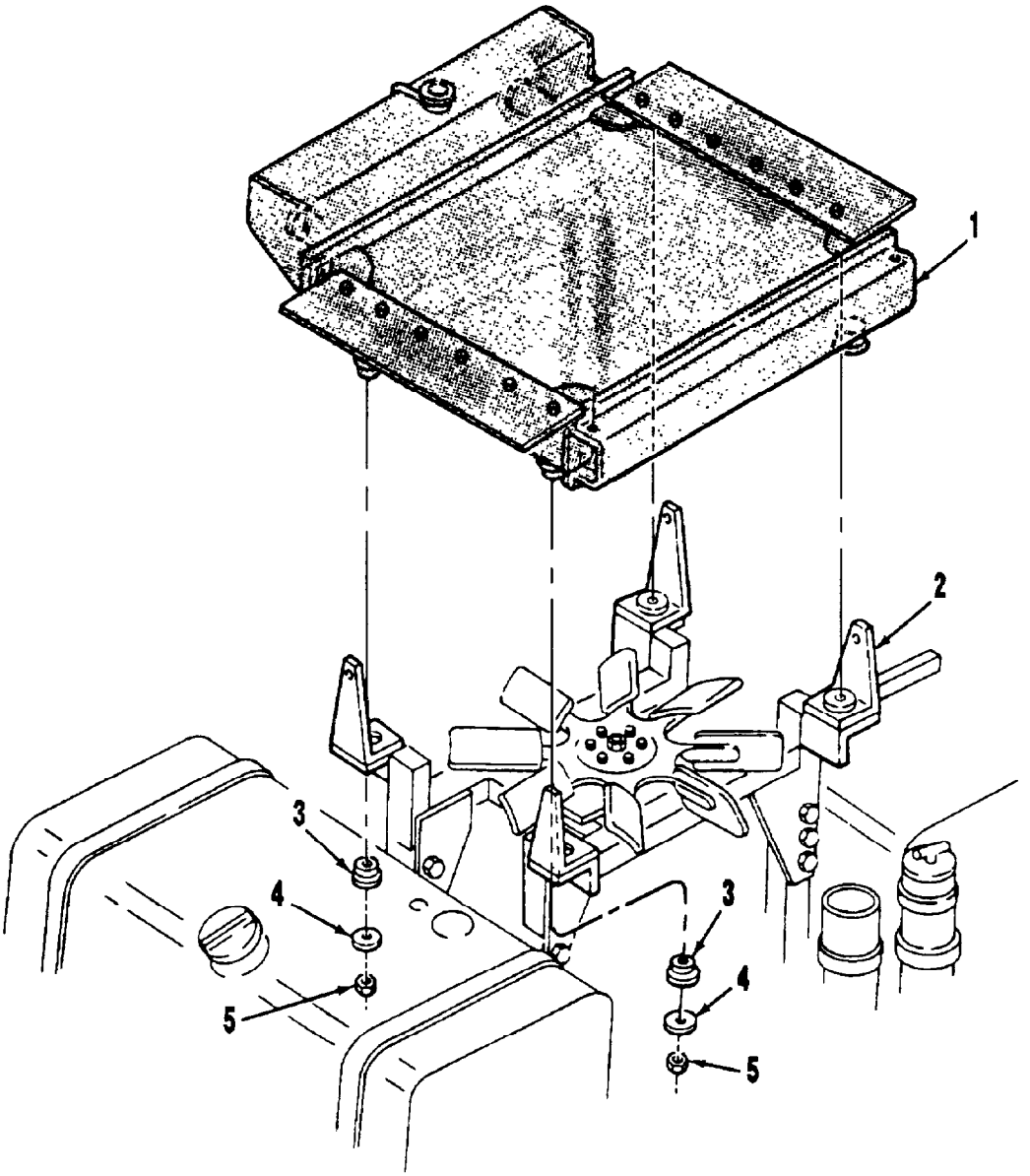

1. Radiator
2. Fan Mount/Radiator Support
3. Lower Mounting Biscuit (4)
4. Washer (4)
5. Locknut (4)

Figure 2-31. Radiator

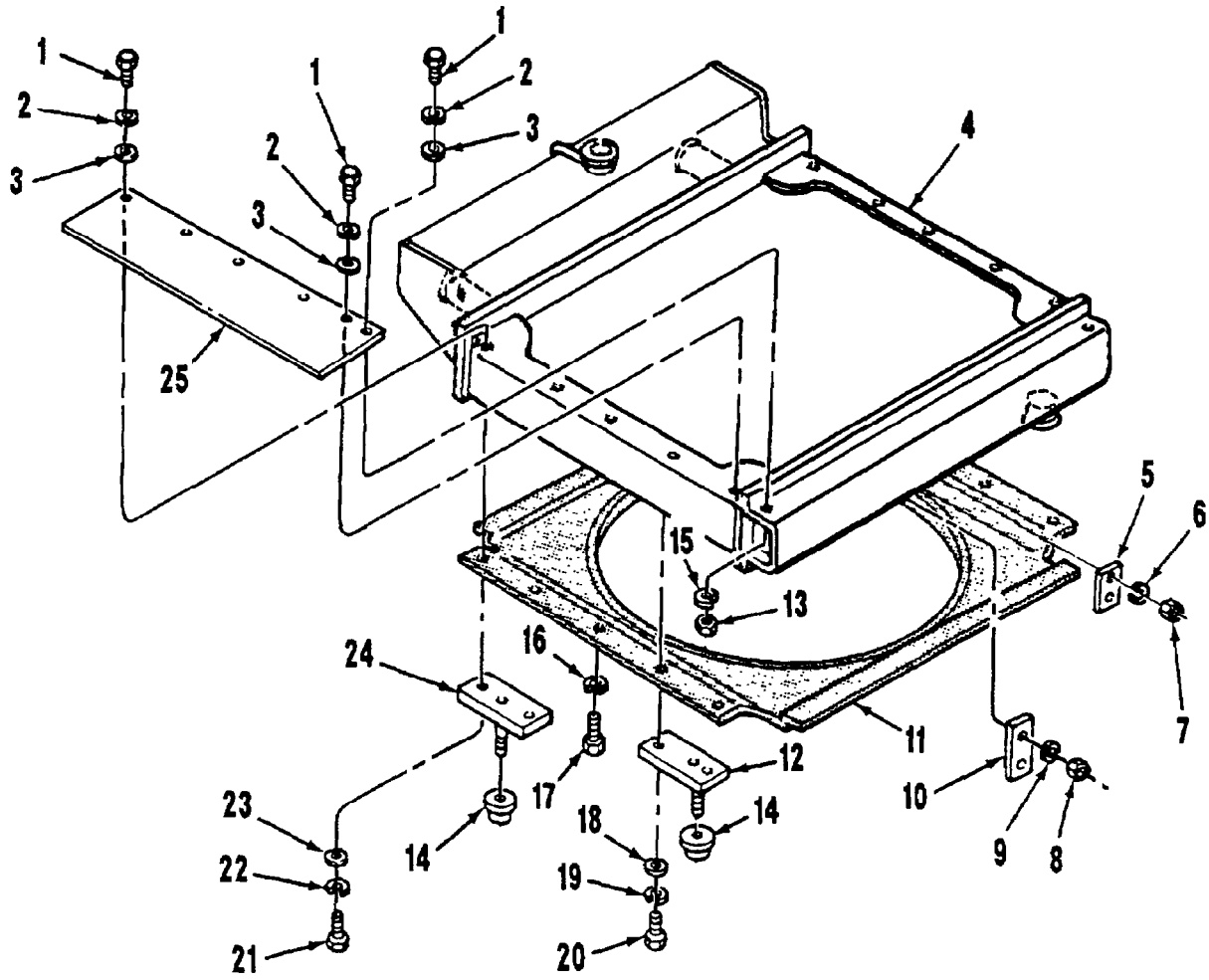

1. Capscrew (6)
2. Lockwasher (6)
3. Washer (6)
4. Radiator
5. Clips
6. Lockwasher (6)
7. Nut (6)
8. Nut
9. Lockwasher
10. Bracket
11. Fan Shroud
12. Rear Radiator Mounting Brkt
13. Nut (2)
14. Upper Mounting Biscuit (4)
15. Lockwasher (2)
16. Lockwasher (2)
17. Capscrew (2)
18. Washer (4)
19. Lockwasher (4)
20. Capscrew (4)
21. Capscrew (4)
22. Lockwasher (4)
23. Washer (4)
24. Front Radiator Mounting Brkt
25. Rubber Flap (2)

Figure 2-32. Fan Shroud

(8) Remove six nuts (7), lockwashers (6), and clips (5) from radiator (4). Discard lockwashers (6).

(9) Remove fan shroud (11) from radiator (4).

2-23. FUEL LINES, VENT LINES, CHECK VALVES, AND FITTINGS

WARNING

To prevent personal injury, if fuel line is under pressure, crack or open line slowly to bleed off pressure. Use a container to catch run-off fuel.

NOTE

Tag all fuel lines before removal to ensure proper installation.

Remove nylon ties as necessary.

a. Use proper size line wrench to remove fuel lines (1, Figure 2-33) as necessary.

b. Remove vent lines (4) as necessary.

NOTE

Perform Step b.1 on LVSA1 series vehicles only.

b.1. Remove vent hose (4.1) and vent valve (4.2) as necessary.

c. Remove check valves as necessary.

d. Remove fittings (2) as necessary.

2-24. FUEL TANKS

a. Left Fuel Tank

(1) Remove hose nut (3, Figure 2-34) from elbow (5) and remove crossover hose (4).

NOTE

Fuel tank lines and fittings for LVSA1 series vehicles have changed to a larger diameter for improved fuel flow. Fittings have changed to brass, and parts are not interchangeable between old and new vehicles. Disassembly steps are the same for old and new vehicles, except that the nipple (10) is not required on LVSA1 series vehicles. Refer to TM 9-2320-297-24P for correct parts identification.

(2) Remove 45° elbow (5), valve (7), nipple (8), elbow (9), and nipple (10) from left fuel tank (14).

(3) Remove hose (17), check valve (15), and adapter (16) from fuel tank (14).

NOTE

Perform step (3.1 thru 3.3) on LVSA1 series vehicles only.

(3.1) Remove two locknuts (18) and capscrews (19) from grab handle (20). Discard locknuts (18).

(3.2) Remove capscrew (21), lockwasher (22), and grab handle (20). Discard lockwasher (22).

(3.3) Remove plug (23) from ends of grab handles (20).

(4) Remove two locknuts (1) from hold-down straps (13) at fan mount/radiator support (2). Discard locknuts (1).

(5) Remove two locknuts (11) from hold-down straps (13) under left fender (6). Discard locknuts (11).

(6) Remove two hold-down straps (13) and hold-down strap liners (12).

NOTE

Perform step 6.1 and 6.2 on LVSA1 series vehicles only.

(6.1) Remove two locknuts (18), and capscrews (19) from grab handle (20). Discard locknuts (18).

(6.2) Remove capscrew (21), washer (22), lockwasher (23), and grab handle (20). Discard lockwasher (23).

WARNING

The left fuel tank is heavy and awkward to handle. To prevent personal injury, use an overhead lifting device to remove fuel tank from fender.

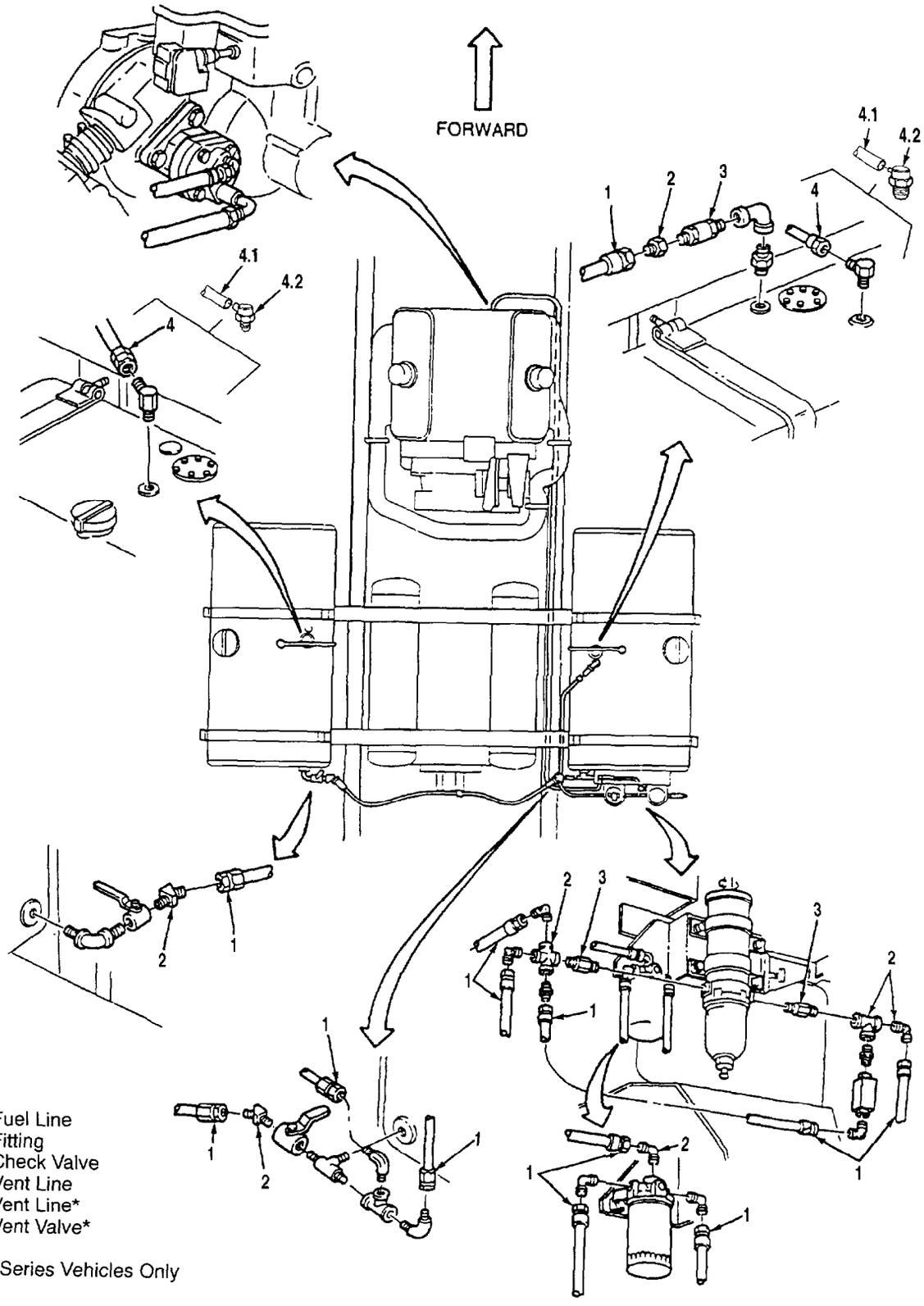

1. Fuel Line
2. Fitting
3. Check Valve
4. Vent Line
4.1. Vent Line*
4.2. Vent Valve*

*LVSA1 Series Vehicles Only

Figure 2-33. Fuel Lines, Vent Lines, Check Valves, and Fittings

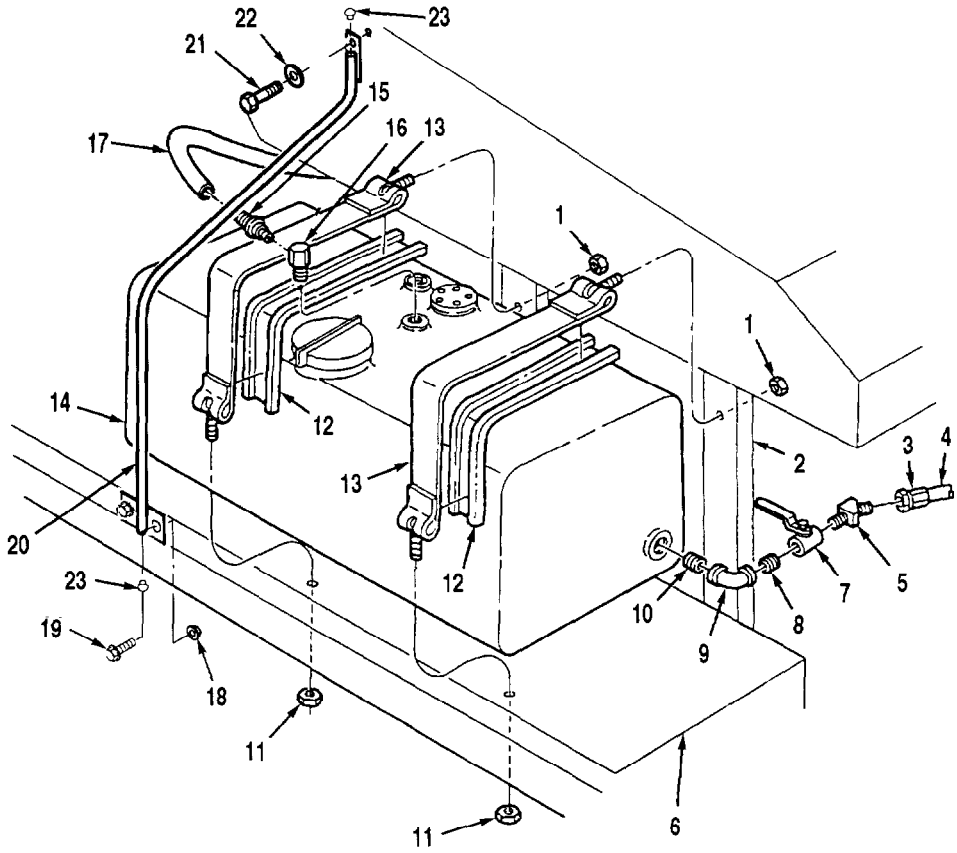

1. Locknut (2)
2. Fan Mount/Radiator Support
3. Hose Nut
4. Crossover Hose
5. 45° Elbow
6. Left Fender
7. Valve
8. Nipple
9. Elbow
10. Nipple
11. Locknut (2)
12. Hold-Down Strap Liner (2)
13. Hold-Down Strap (2)
14. Left Fuel Tank
15. Check Valve
16. Adapter
17. Hose
18. Locknut (2)*
19. Capscrew *
20. Grab Handle*
21. Capscrew*
22. Lockwasher*
23. Plug*

* LVSA1 Series Vehicles Only

Figure 2-34. Left Fuel Tank

WARNING

To prevent personal injury, direct personnel to stay clear of fuel tanks during removal procedures.

(7) Remove left fuel tank (14) from left fender (6) using an overhead lifting device.

b. Right Fuel Tank

NOTE

Fuel tank lines and fittings for LVSA1 series vehicles have changed to a larger diameter for improved fuel flow. Fittings have changed to brass, and parts are not interchangeable between old and new vehicles. Disassembly steps are the same for old and new vehicles, except that the nipple (9.2) is not required on LVSA1 series vehicles. Refer to TM 9-2320-297-24P for correct parts identification.

(1) Remove adapter (9, Figure 2-35), valve (9.1), and nipple (9.2) from valve (18).

(2) Loosen hose nut (7) and remove hose (10).

(3) Loosen hose nut (5) and remove hose (6).

(4) Loosen hose nut (13) and remove hose (12).

(5) Remove hose (14), check valve (15), and adapter (17) from right fuel tank (1).

NOTE

Perform steps (5.1 through 5.3) on LVSA1 series vehicles only.

(5.1) Remove vent line (17.1) and vent valve (17.2).

(5.2) Remove two locknuts (19) and capscrews (20) from grab handle (21). Discard locknuts (19).

(5.3) Remove capscrew (22), lockwasher (23), and grab handle (21) from vehicle. Discard lockwasher (23).

(6) Remove two locknuts (11) from hold-down straps (2) at fan/mount radiator support (8). Discard locknuts (11).

(7) Remove two locknuts (4) from hold-down straps (2) under right fender (3). Discard locknuts (4).

(8) Remove two hold-down straps (2) and hold-down strap liners (16) from right fuel tank (1).

WARNING

The right fuel tank is heavy and awkward to handle. To prevent personal injury, use an overhead lifting device to remove the right fuel tank from the fender.

To prevent personal injury, direct personnel to stay clear of fuel tanks during removal procedures.

(9) Remove right fuel tank (1) from right fender (3) using an overhead lifting device.

2-25. MOTION CONTROL VALVE

WARNING

Hydraulics may be under pressure and can spurt out when lines are disconnected. To prevent personal injury, crack all lines slowly, keep face clear of lines, and wear safety glasses when working with hydraulic system.

NOTE

Tag all hydraulic lines before removal to ensure proper installation.

Place a container to catch hydraulic oil that may spill when hydraulic lines are removed.

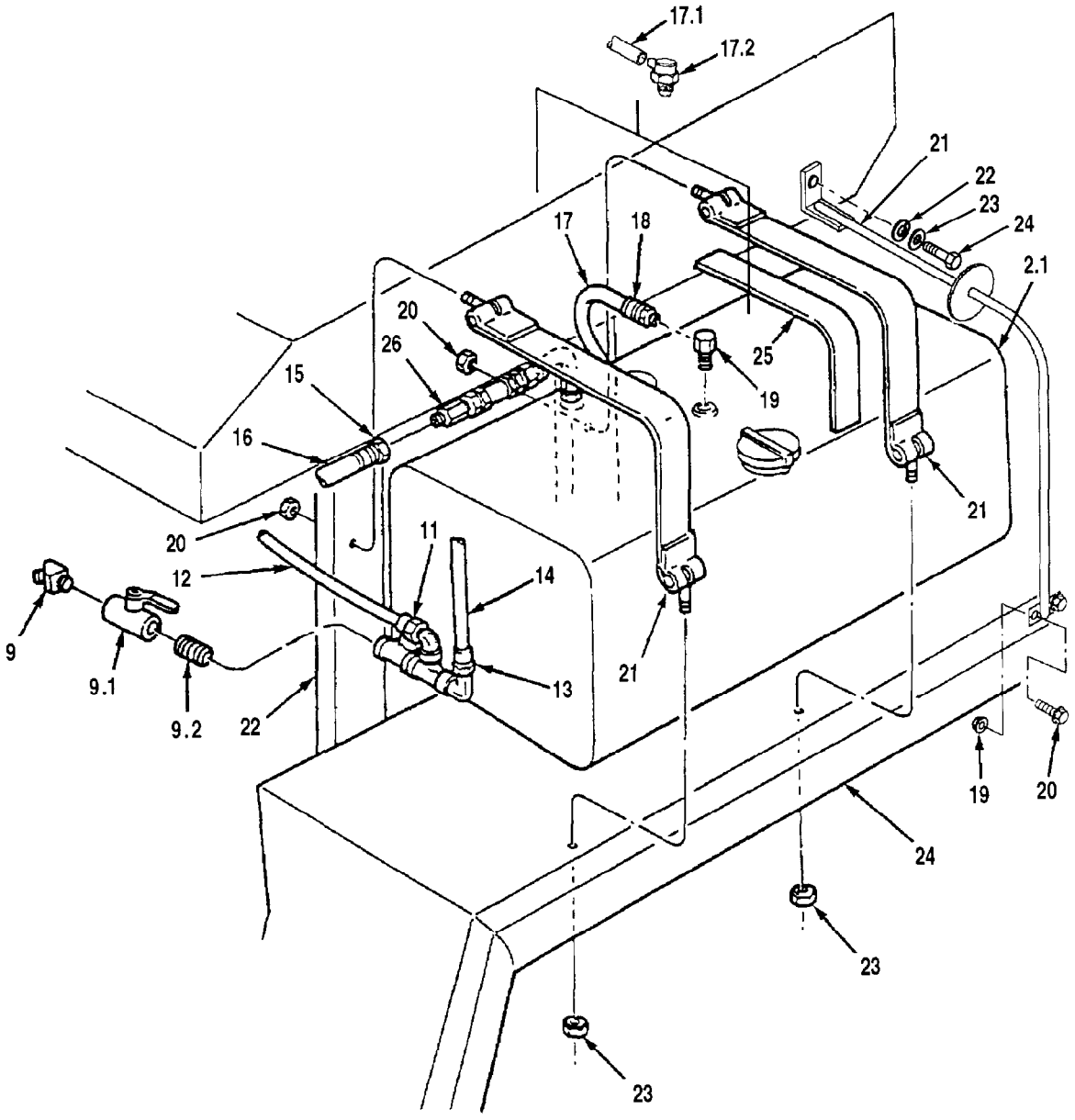

1. Right Fuel Tank
2. Hold-Down Strap (2)
3. Right Fender
4. Locknut (2)
5. Hose Nut
6. Hose
7. Hose Nut
8. Fan Mount/Radiator Support
9. Adapter
9.1. Valve
9.2. Nipple
10. Hose
11. Locknut (2)
12. Hose
13. Hose Nut
14. Hose
15. Check Valve
16. Hold-Down Strap Liner (2)
17. Adapter
17.1. Vent Line*
17.2. Vent Valve*
18. Valve
19. Locknut *
20. Capscrew*
21. Grab Handle*
22. Capscrew (2)*
23. Lockwasher (2)*
24. Plug*

* LVSA1 Series Vehicles Only

Figure 2-35. Right Fuel Tank

a. Remove eight hydraulic lines (1 through 8, Figure 2-36) from motion control valve (9).

b. Remove two capscrews (10) and lockwashers (11) from motion control valve (9) and remove motion control valve (9) from mounting bracket (12). Discard lockwashers (11).

2-26. FAN MOUNT/RADIATOR SUPPORT

WARNING

The fan mount/radiator support is very heavy. To prevent personal injury, use an overhead lifting device to remove the fan mount/radiator support.

Air lines under pressure will move violently when removed. To prevent personal injury, drain all air pressure from system before removing pressurized components.

NOTE

The fan mount/radiator support will be removed with air reservoirs, fan, and fan motor still attached. The air reservoirs, fan, and fan motor will be removed from the fan mount/radiator support after it is removed. Refer to Paragraph 2-27 for removal of fan and fan motor and Paragraph 2-29 for removal of air reservoirs.

Tag all air lines before removal to ensure proper installation.

a. Remove two air lines (1 and 2, Figure 2-37) from rear of right main air reservoir (6).

b. Remove three air lines (3, 4, and 5) from fender side of right main air reservoir (6).

c. Remove two air lines (7 and 8) from front of right main air reservoir (6).

d. Remove air line (18) from rear of left main air reservoir (19).

e. Remove air line (20) from fender side of left main air reservoir (19).

f. Remove two air lines (21 and 22) from front of left main air reservoir (19).

WARNING

Hydraulics may be under pressure and can spurt out when lines are disconnected. To prevent personal injury, crack all lines slowly, keep face clear of lines, and wear safety glasses when working with hydraulic system.

NOTE

Tag all hydraulic lines before removal to ensure proper installation.

Place a container to catch hydraulic oil that may spill when hydraulic lines are removed.

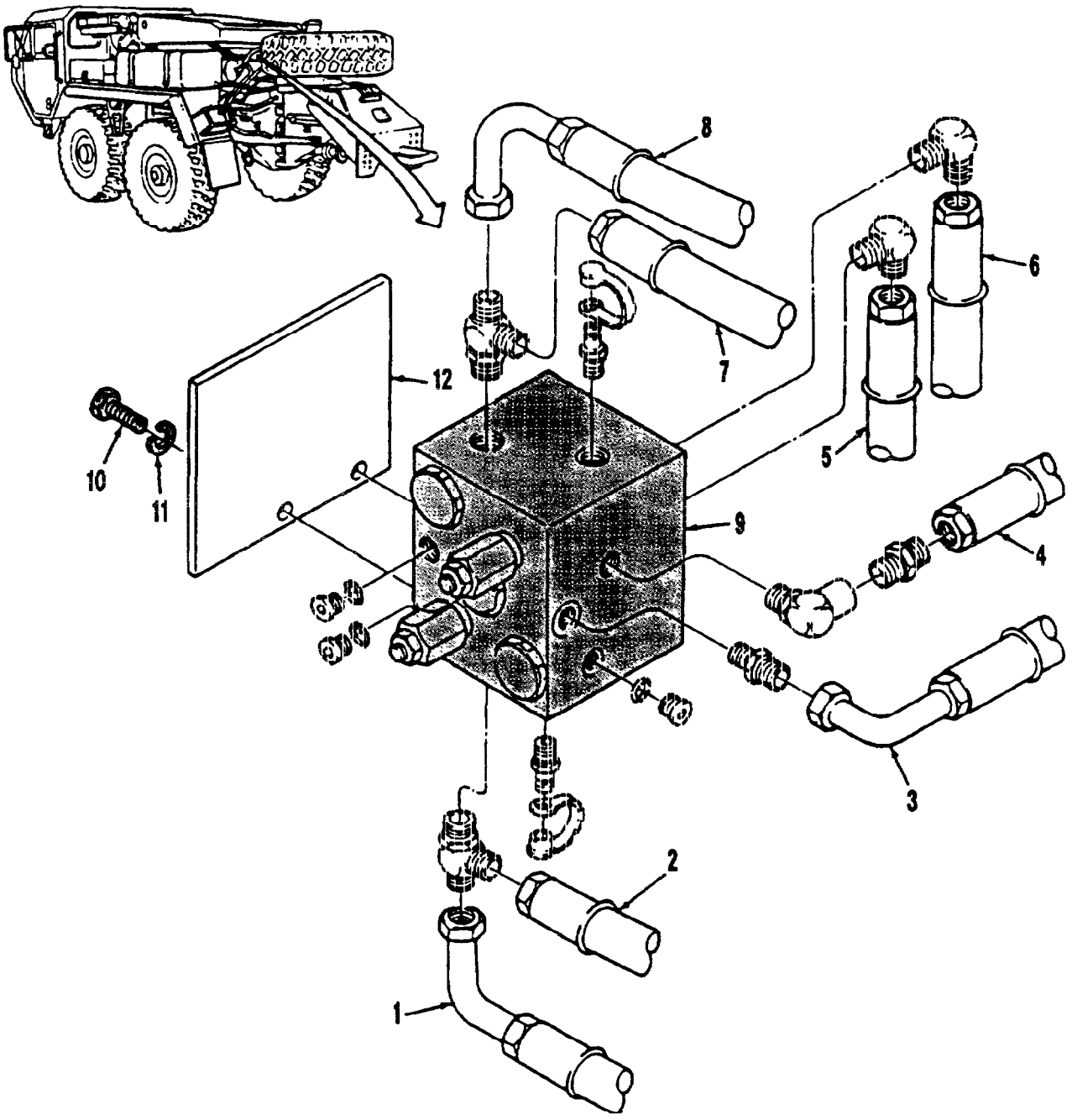

1. Hydraulic Line
2. Hydraulic Line
3. Hydraulic Line
4. Hydraulic Line
5. Hydraulic Line
6. Hydraulic Line
7. Hydraulic Line
8. Hydraulic Line
9. Motion Control Valve
10. Capscrew (2)
11. Lockwasher (2)
12. Mounting Bracket

Figure 2-36. Motion Control Valve

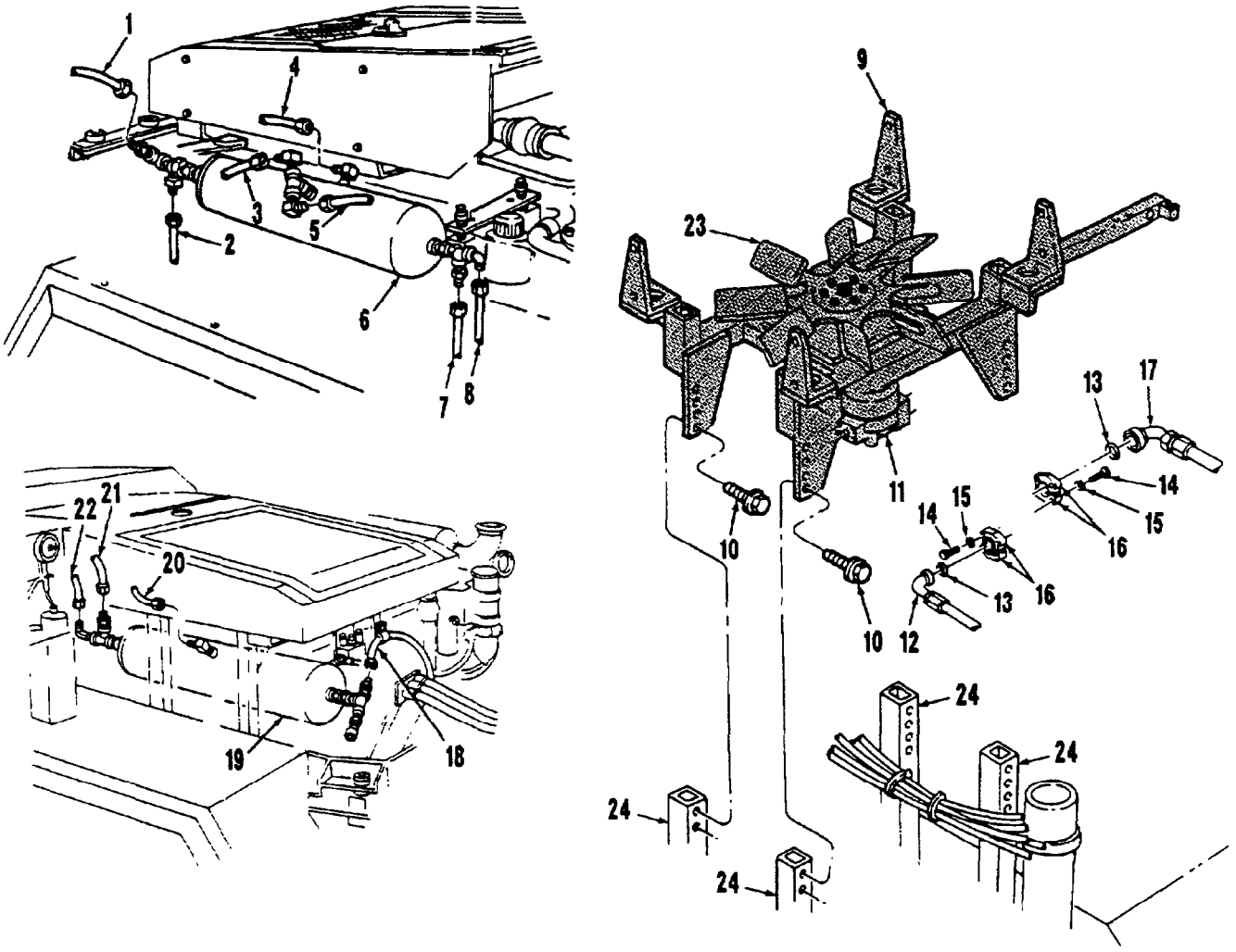

1. Air Line
2. Air Line
3. Air Line
4. Air Line
5. Air Line
6. Right Main Air Reservoir
7. Air Line
8. Air Line
9. Fan Mount/Radiator Support
10. Flanged Capscrew (16)
11. Fan Motor
12. Hydraulic Line
13. O-Ring
14. Capscrew (8)
15. Lockwasher (8)
16. Flange Half (4)
17. Hydraulic Line
18. Air Line
19. Left Main Air Reservoir
20. Air Line
21. Air Line
22. Air Line
23. Fan
24. Mounting Bracket

Figure 2-37. Fan Mount/Radiator Support

g. Remove four capscrews (14), lockwashers (15), two flange halves (16), O-ring (13), and hydraulic line (12) from fan motor (11). Discard lockwashers (15) and O-ring (13).

h. Remove four capscrews (14) , lockwashers (15), two flange halves (16), O-ring (13), and hydraulic line (17) from fan motor (11). Discard lockwashers (15) and O-ring (13).

i. Remove 16 flanged capscrews (10) from fan mount/radiator support (9).

j. Remove fan mount/radiator support (9) with fan (23), fan motor (11), and air reservoirs (6 and 19) from mounting brackets (24).

2-27. FAN AND FAN MOTOR

a. Fan

(1) Remove cotter pin (1, Figure 2-38) from nut (2). Discard cotter pin (1).

(2) Remove nut (2) and washer (3).

(3) Remove six capscrews (4) and lockwashers (5). Discard lockwashers (5).

(4) Remove fan (6) from fan hub (7).

(5) Remove fan hub (7) from fan motor (8).

(6) Remove woodruff key (9) from fan motor shaft (10).

b. Fan Motor

WARNING

The fan motor is heavy. To prevent personal injury, support fan motor during removal with lifting device or help from assistant(s).

(1) Remove four capscrews (1, Figure 2-39), washers (2), lockwashers (6), and nuts (5) from fan motor (4). Discard lockwashers (6).

(2) Remove fan motor (4) from fan mount/radiator support (3).

2-28. QUICK DISCONNECT FITTING

WARNING

Air lines under pressure will move violently when removed. To prevent personal injury, drain all air pressure from system before removing pressurized components.

To prevent personal injury and damage to fittings, use proper size wrenches when removing fittings.

NOTE

Quick disconnect fittings for the LVSA1 left air reservoir have changed from a reducer, nipple, and quick disconnect fitting to hex nipple and quick disconnect fitting. When repairing a non-A1 vehicle, use the new fittings to replace the old fittings. Refer to TM 9-2320-297-24P for correct parts identification.

a. Hold hex nipple (1, Figure 2-40) securely with proper size wrench.

b. Remove quick disconnect fitting (2) from hex nipple (1).

c. Remove hex nipple (1) from tee (3).

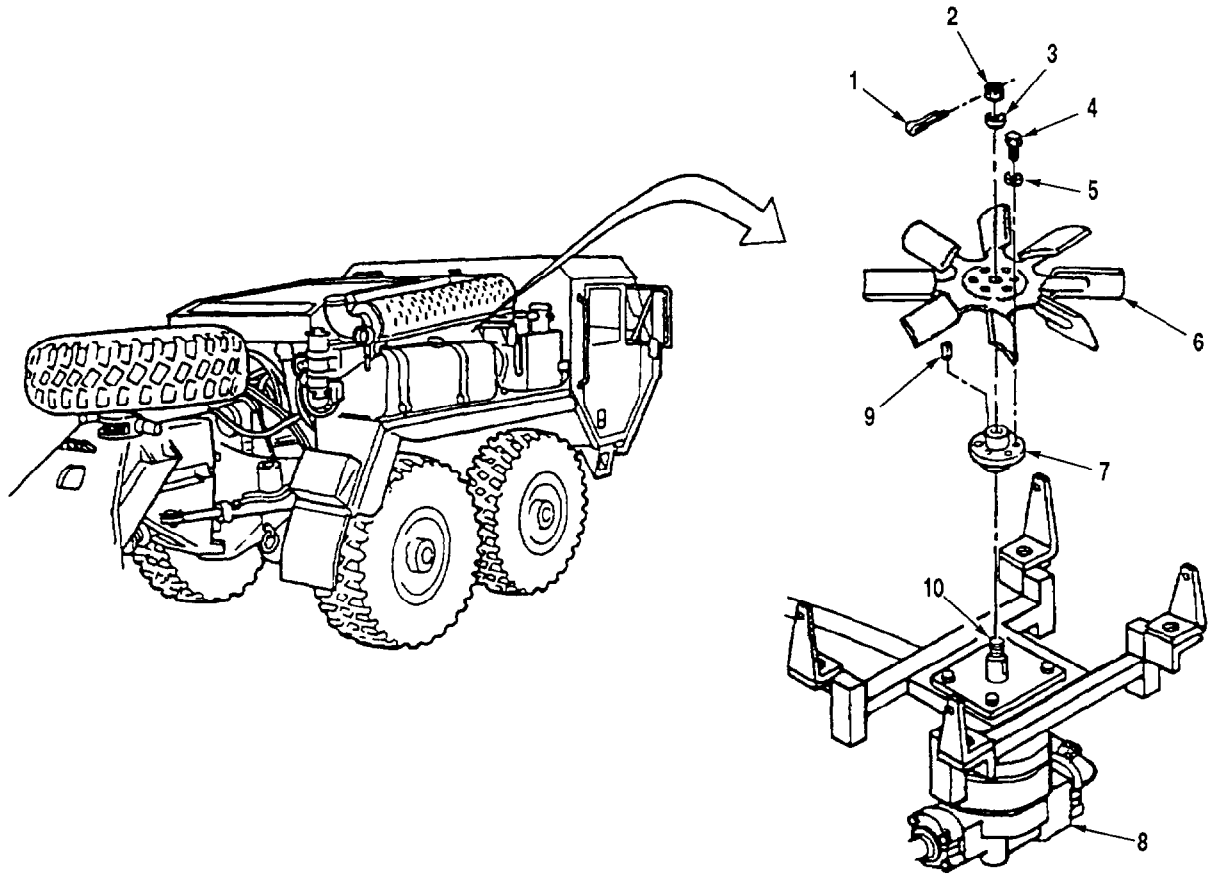

1. Cotter Pin
2. Nut
3. Washer
4. Capscrew (6)
5. Lockwasher (6)
6 Fan
7. Fan Hub
8. Fan Motor
9. Woodruff Key
10. Fan Motor Shaft

Figure 2-38. Fan

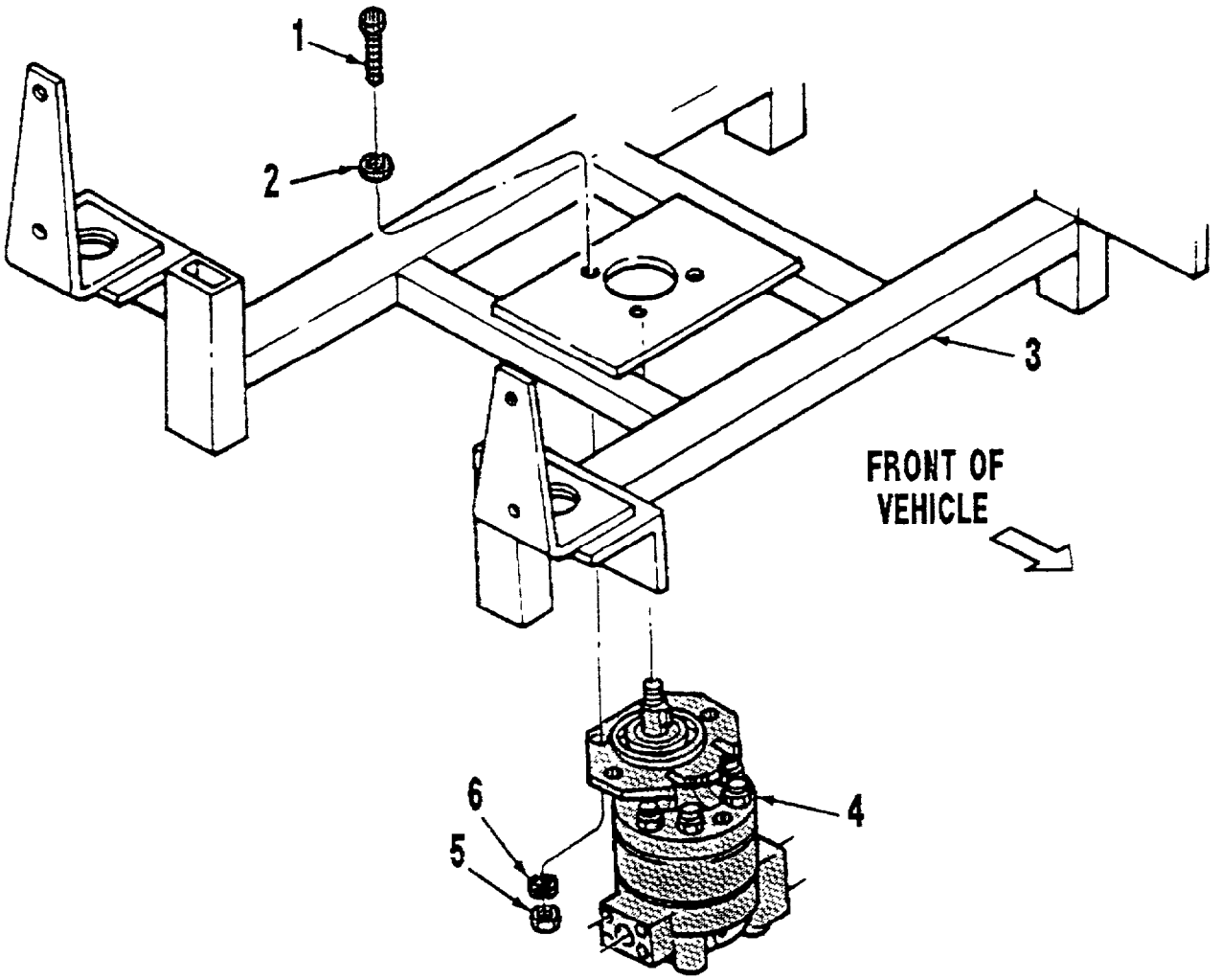

1. Capscrew (4)
2. Washer (4)
3. Fan Mount/Radiator Support
4. Fan Motor
5. Nut (4)
6. Lockwasher (4)

Figure 2-39. Fan Motor

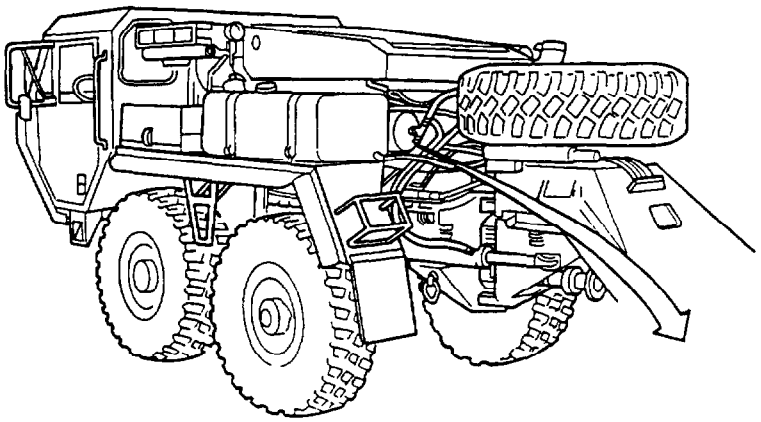

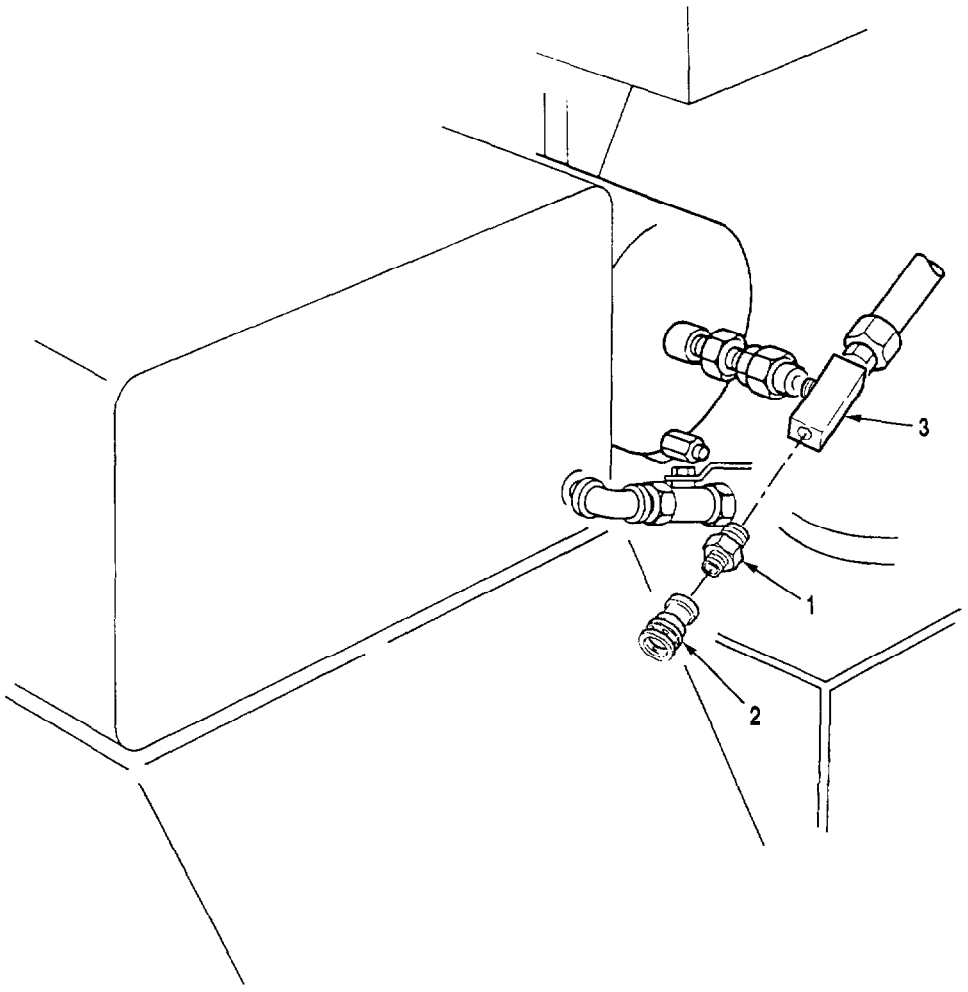

1. Hex Nipple
2. Quick Disconnect Fitting
3. Tee

Figure 2-40. Quick Disconnect Fitting

2-29. MAIN AIR RESERVOIRS

WARNING

The main air reservoirs are very heavy and awkward to handle. To prevent personal injury, use an overhead lifting device when removing main air reservoirs from fan mount/radiator support.

NOTE

This procedure works for both air reservoirs.

Air lines are compression type lines. These air lines have sleeves inserted in the ends to help support lines. They also use eyelets to seal lines. When removing air lines, the eyelet may stay with the line or may stay with the fitting. Refer to Paragraph 2-14 for air line repair procedures.

Mounting hardware for LVSA1 main air reservoirs has changed from a capscrew, lockwasher, and hex nut to a flanged type capscrew and locknut. When repairing a non-A1 vehicle, use the new style flanged mounting hardware to replace the old style hardware. Refer to TM 9-2320-297-24P for correct mounting hardware.

a. Remove two nuts (8, Figure 2-41), lockwashers (9), and capscrews (10) from main air reservoir mounting brackets (6). Discard lockwashers (9).

b. Spread main air reservoir mounting brackets (6) apart.

c. Slide right main air reservoir (7) or left main air reservoir (18) to rear and remove from fan mount/radiator support (17).

d. Remove four locknuts (5), capscrews (3), and four main air reservoir mounting brackets (6) if damaged. Discard locknuts (5).

e. Remove two locknuts (15), capscrews (2), and rear bracket (1) if damaged. Discard locknuts (15).

f. Remove two locknuts (11), capscrews (14), and front bracket (13) if damaged. Discard locknuts (11).

2-30. GRAB HANDLE - LEFT FENDER

a. Remove two locknuts (1, Figure 2-42), washers (2), and capscrews (4) from upper end of grab handle (7). Discard locknuts (1).

b. Remove two locknuts (1), washers (2), plate (5). and capscrews (4) from lower end of grab handle (7). Discard locknuts (1).

c. Remove grab handle (7) from left fender (6).

d. Remove plug (3) from grab handle (7).

NOTE

Perform Steps (d.1 thru d.3) on LVSA1 series vehicles only.

d.1. Remove two locknuts (1.1), washers (2.1), and capscrews (4.1) from upper end of grab handle (7.1). Discard locknuts (1.1).

d.2. Remove two locknuts (1.1), capscrews (4.1), and grab handle (7.1) from left fender. Discard locknuts (1.1).

d.3. Remove plugs (3.1) from grab handle (7.1).

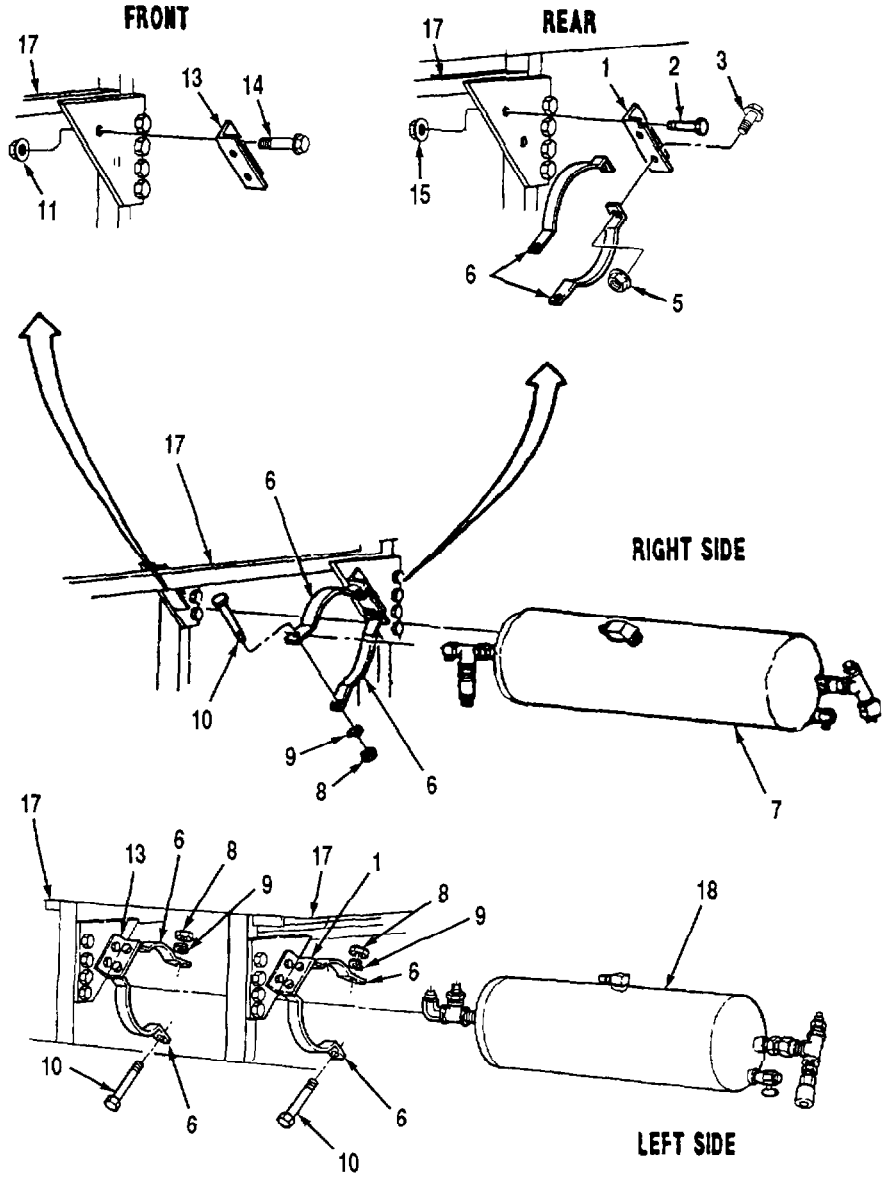

1. Rear Bracket
2. Capscrew (2)
3. Capscrew (4)
4. Deleted
5. Locknut (4)
6. Main Air Reservoir Mounting Bracket (4)
7. Right Main Air Reservoir
8. Nut (2)
9. Lockwasher (2)
10. Capscrew (2)
11. Locknut (2)
12. Deleted
13. Front Bracket
14. Capscrew (2)
15. Locknut (2)
16. Deleted
17. Fan Mount/Radiator Support
18. Left Main Air Reservoir

Figure 2-41. Main Air Reservoirs

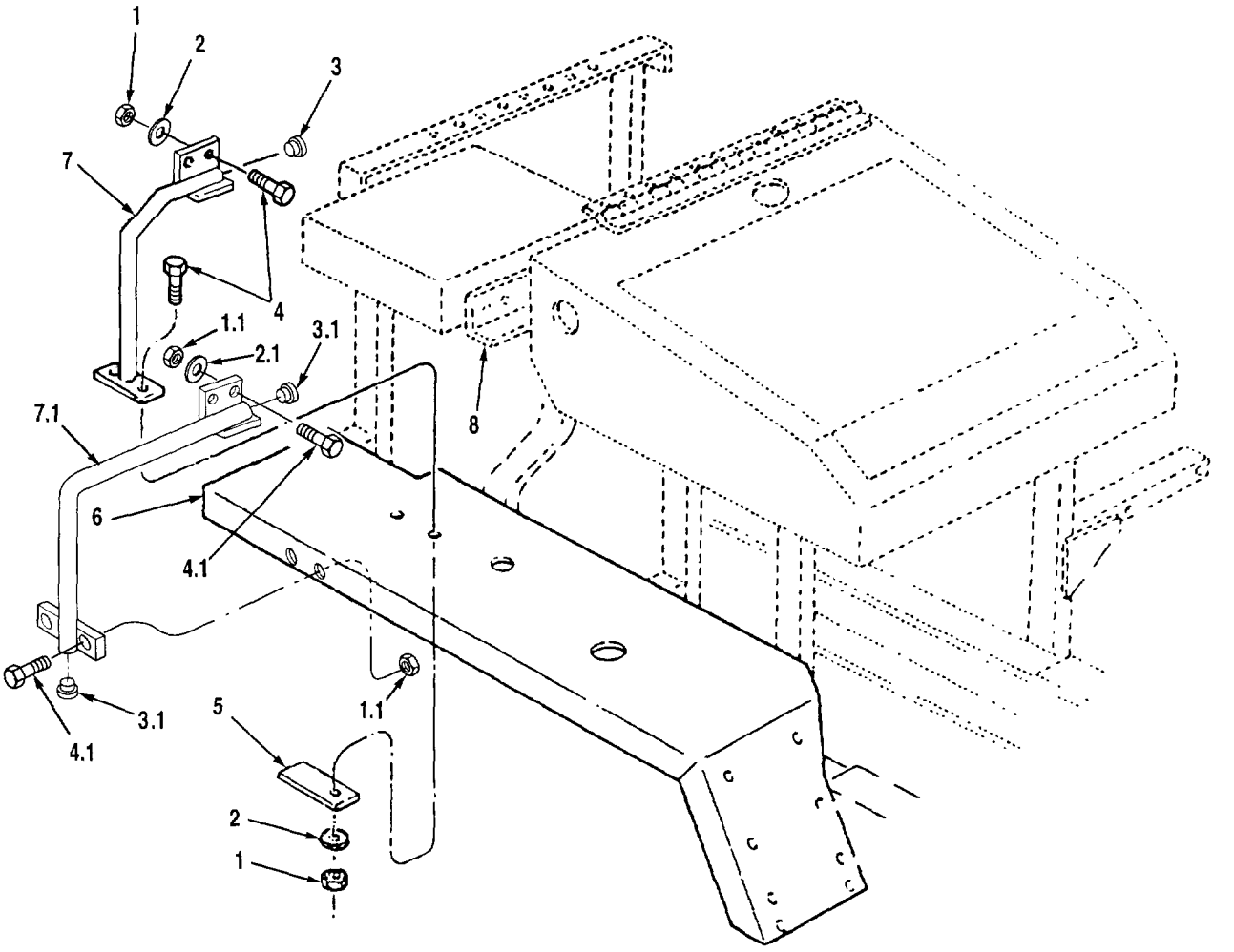

1. Locknut (4)
1.1. Locknut (4)*
2. Washer (4)
2.1. Washer (2)*
3. Plug
3.1. Plug (2)*
4. Capscrew (4)
4.1. Capscrew (4)*
5. Plate
6. Left Fender
7. Grab Handle
7.1. Grab Handle *
8. Mounting Surface

* LVSA1 Series Vehicles Only

Figure 2-42. Grab Handle - Left Fender

2-31. AIR CLEANER ASSEMBLY

NOTE

Tag all hoses before removal to ensure proper installation.

a. Loosen clamp (1, Figure 2-43) on air inlet duct (2).

b. Loosen clamp (3) on hose (4) at check valve assembly (5).

c. Remove hose (4) from check valve assembly (5) and remove clamp (3) from hose (4).

NOTE

Perform steps c.1 and c.2 for LVSA1 series vehicles only.

c.1. Remove four capscrews (5.1) from right, left, and rear sides of weatherhood (5.2).

c.2. Remove two capscrews (5.4) and locknuts (5.3) from tabs of weatherhood (5.2).

NOTE

Mounting hardware for the LVSA1 worklight bracket has changed from capscrews, lockwashers, and hex nuts to flanged type capscrews and locknuts. When repairing a non-A1 vehicle, use the new style flanged mounting hardware to replace the old style hardware. Refer to TM 9-2320-297-24P for correct parts identification.

c.3. Remove two capscrews (6), two locknuts (8), worklight (9), and bracket (10). Discard locknuts (8).

d. Remove two locknuts (10.1), capscrews (10.2), washer (10.3) and bracket (10.4). Discard locknuts (10.1).

e. Remove two locknuts (11) and capscrews (12). Discard locknuts (11).

f. Remove capscrew (13) and locknut (14) from hanger (15). Discard locknut (14).

g. Remove capscrew (16), nut (17), and bracket (18) from air cleaner assembly (19).

h. Remove four capscrews (20) and locknuts (21) from air cleaner assembly brackets (22). Discard locknuts (21)

WARNING

The air cleaner assembly is very heavy. To prevent personal injury, use a sling and an overhead lifting device to remove air cleaner assembly from vehicle.

To prevent personal injury, direct personnel to stay clear of air cleaner assembly during removal procedures.

i. Remove air cleaner assembly (19), using an overhead lifting device, from air cleaner assembly bracket (22).

j. Remove capscrew (23) and nut (24) to remove clamp (25).

k. Loosen clamp (26) at air inlet housing (27) and remove hose (28).

l. Remove hose (28) from air inlet housing (27).

m. Loosen two clamps (29 and 30). Remove check valve assembly (5).

n. Remove two elbows (31).

2-32. AIR CLEANER INTAKE DUCTING

a. Loosen clamp (1, Figure 2-44); remove hose (2) and remove clamp (1) from hose (2).

b. Loosen fitting (3) and remove hose (4).

c. Loosen clamp (5) at turbocharger (6).

d. Pull air cleaner intake ducting (7) free from turbocharger (6) and remove clamp (5) from intake ducting (7).

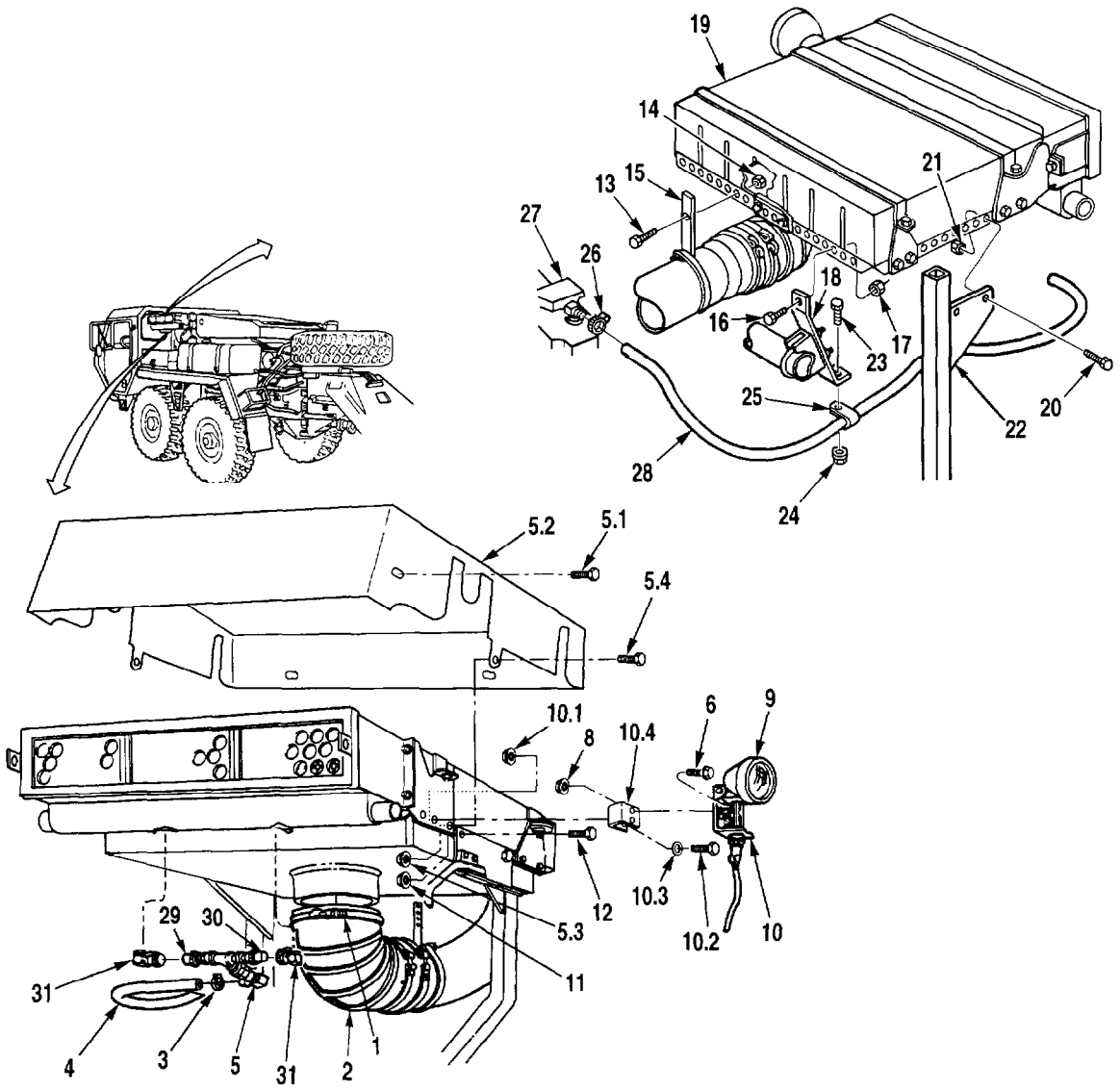

1. Clamp
2. Air Inlet Duct
3. Clamp
4. Hose
5. Check Valve Assembly
5.1. Capscrew (4)*
5.2. Weatherhood*
5.3. Locknut (2)*
5.4. Capscrew (2)*
6. Capscrew (2)
7. Deleted
8. Locknut (2)
9. Work light
10. Bracket
10.1. Locknut (2)
10.2. Capscrew
10.3. Capscrew (2)
10.4. Bracket
11. Locknut (2)
12. Capscrew (2)
13. Capscrew
14. Locknut
15. Hanger
16. Capscrew
17. Nut
18. Bracket
19. Air Cleaner
20. Capscrew (4)
21. Locknut (4)
22. Mounting Bracket (2)
23. Capscrew
24. Nut
25. Clamp
26. Clamp
27. Air Inlet Housing
28. Hose
29. Clamp
30. Clamp
31. Elbow (2)

* LVSA1 Series Vehicles Only

Figure 2-43 Air Cleaner Assembly

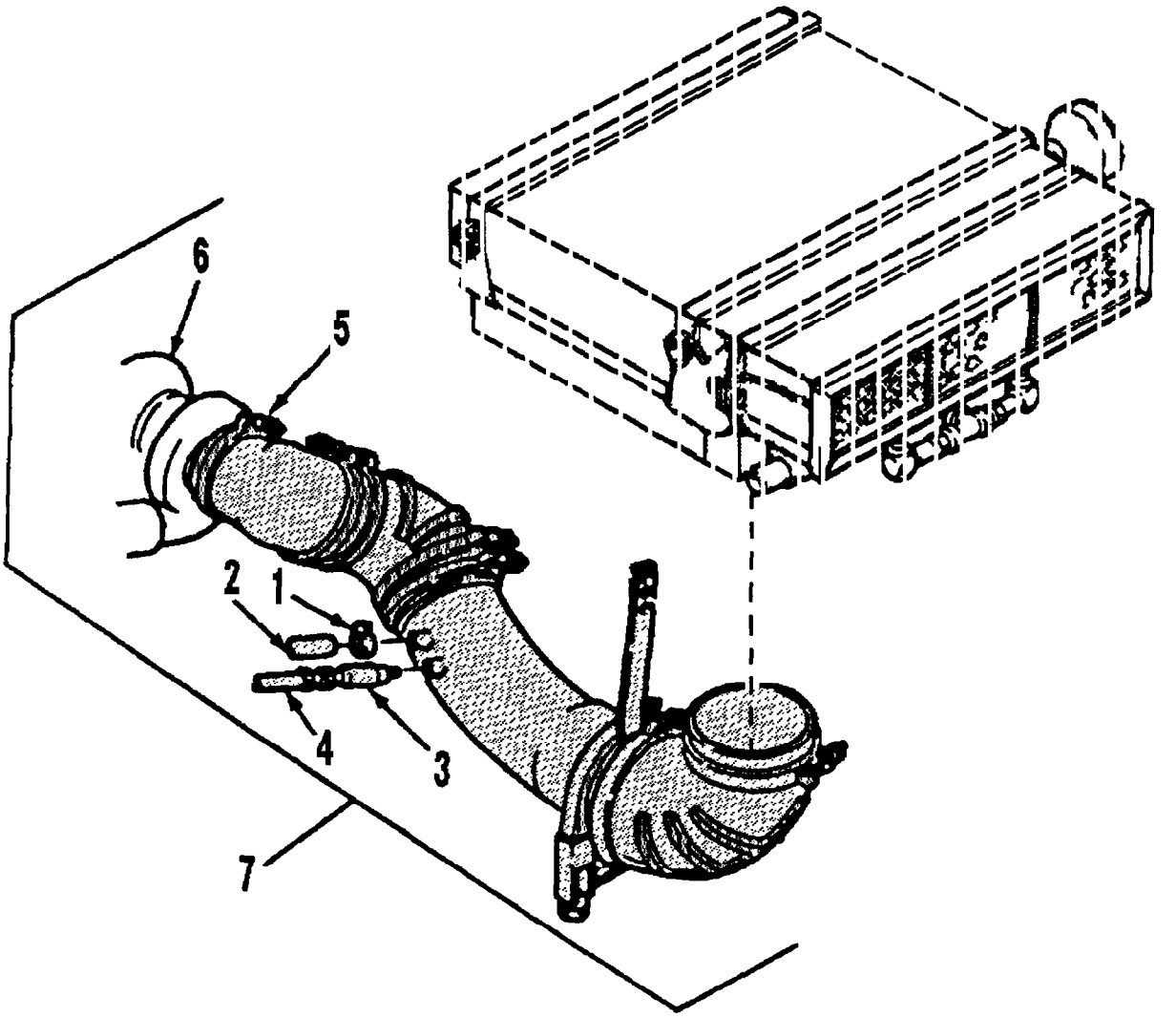

1. Clamp
2. Hose
3. Fitting
4. Hose
5. Clamp
6. Turbocharger
7. Intake Ducting

Figure 2-44. Air Cleaner Intake Ducting

2-33. ALTERNATOR DIODE AND CIRCUIT BREAKER

WARNING

To prevent personal injury, disconnect batteries. Do not wear watches, rings, and other jewelry when working on electrical components.

NOTE

Tag all wires before removal to ensure proper installation.

a. Alternator Diode

(1) Remove nut (1, Figure 2-45), star washer (2), and wire (3) from alternator diode (4). Discard star washer (2).

(2) Remove nut (5), star washer (6), and washer (7) from alternator diode (4). Discard star washer (6).

(3) Remove alternator diode (4) from mounting plate (16).

b. Circuit Breaker

(1) Remove two capscrews (8), lockwashers (9), and three wires (3, 10, and 11) from circuit breaker (15). Discard lockwashers (9).

NOTE

Mounting hardware for LVSA1 alternator circuit breakers has changed from a capscrew, lockwasher, and hex nut, to a flanged capscrew and locknut. When repairing a non-A1 vehicle, use the new style flanged mounting hardware to replace the old style hardware. Refer to TM 9-2320-297-24P for correct parts identification.

(1.1) Remove two locknuts (12) and capscrews (14) from circuit breaker (15). Discard locknuts (12).

(2) Remove circuit breaker (15) from mounting plate (16).

2-34. STARTER RELAY

WARNING

To prevent personal injury, disconnect batteries. Do not wear watches, rings, and other jewelry when working on electrical components.

NOTE

Tag all wires before removal to ensure proper installation.

a. Remove two nuts (1, Figure 2-46) and two wires (2 and 3) from starter relay (4).

b. Remove two nuts (5) and three wires (6, 7, and 8) from starter relay (4).

c. Remove two nuts (9), star washer (10), lockwasher (11), and capscrews (12) from starter relay (4). Discard star washer (10) and lockwasher (11).

d. Remove wire (3) and washer (13) from starter relay (4).

e. Remove starter relay (4) from mounting surface (14).

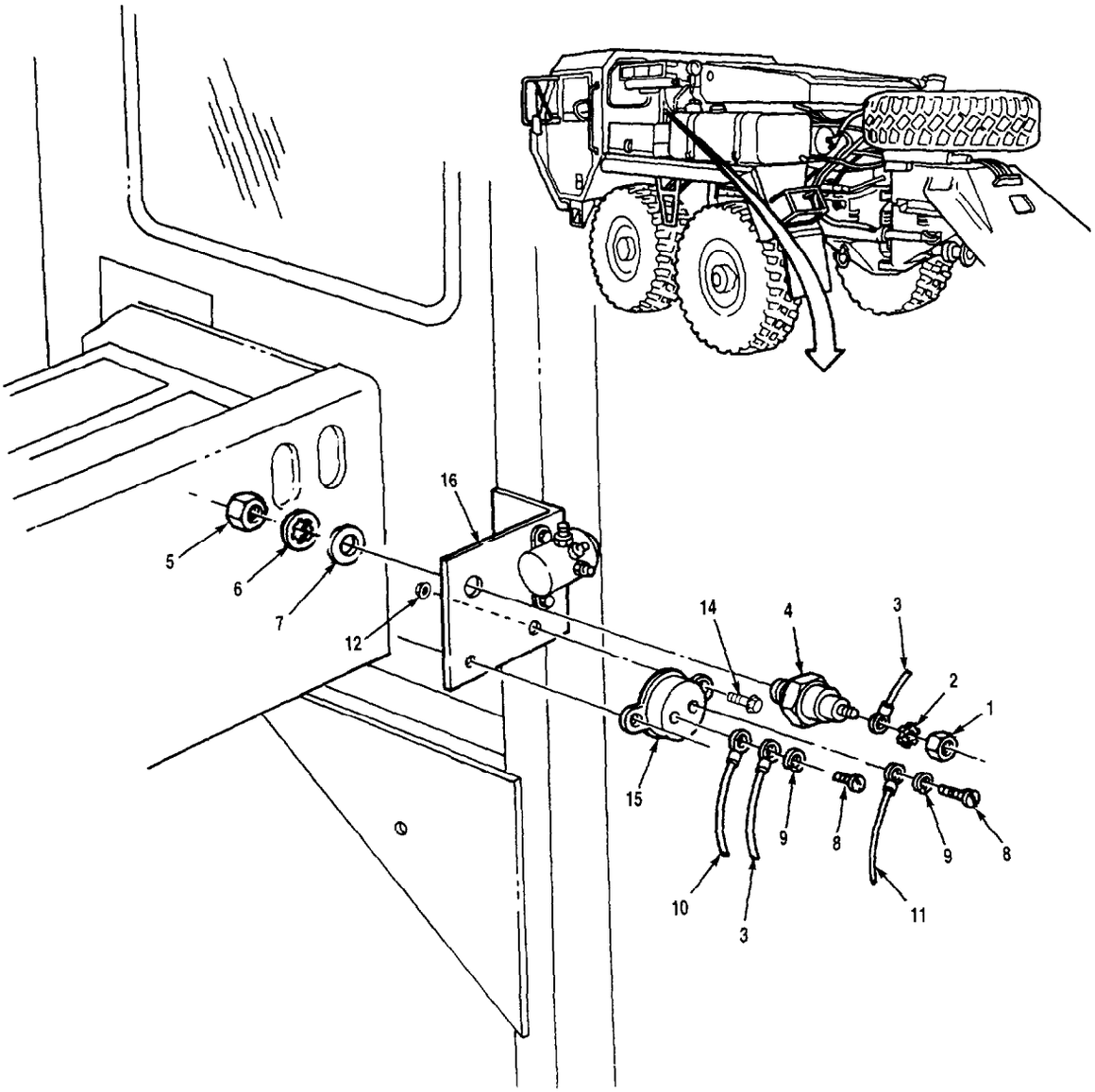

1. Nut
2. Star Washer
3. Wire (No. 279)
4. Alternator Diode
5. Nut
6. Star Washer
7. Washer
8. Capscrew (2)
9. Lockwasher (2)
10. Wire (No. 278)
11. Wire (No. 833)
12. Locknut (2)
13. Deleted
14. Capscrew (2)
15. Circuit Breaker
16. Mounting Plate

Figure 2-45. Alternator Diode and Circuit Breaker

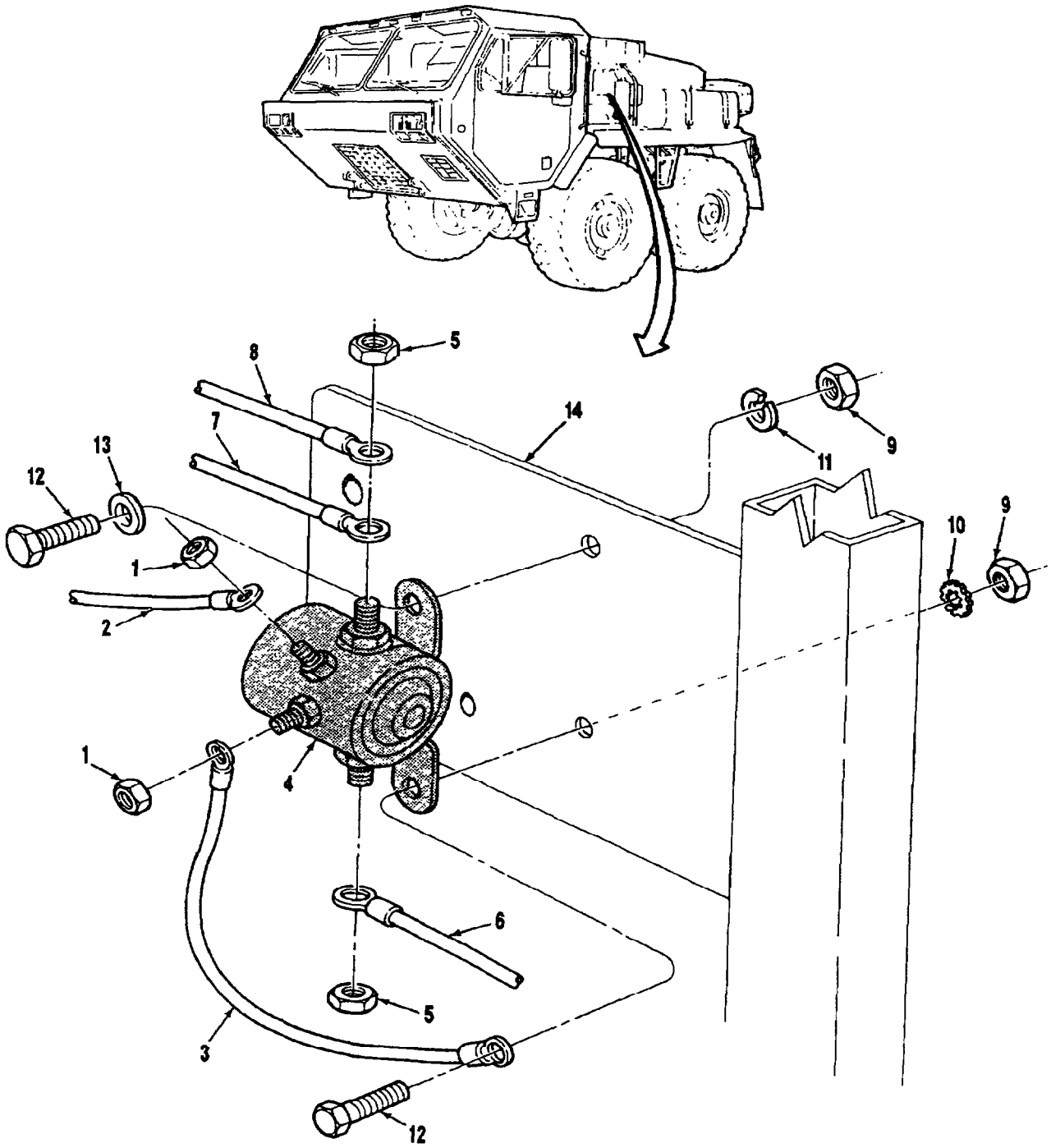

1. Nut (2)
2. Wire (No. 021)
3. Wire (No. 196)
4. Starter Relay
5. Nut (2)
6. Wire (No. 045)
7. Wire (No. 046)
8. Wire (No. 430)
9. Nut (2)
10. Star Washer
11. Lockwasher
12. Capscrew (2)
13. Washer
14. Mounting Surface

Figure 2-46. Starter Relay

2-35. ETHER BOTTLE, AIR DRYER, AND AIR DRYER MOUNTING BRACKET

a. Ether Bottle

WARNING

The ether bottle may retain some pressure. To prevent personal injury, wear eye protection and keep face clear of ether bottle during removal procedures.

(1) Unscrew two wing nuts (1, Figure 2-47) securing ether bottle clamp (2) to studs (19).

(2) Remove ether bottle clamp (2) from ether bottle (3).

(3) Unscrew ether bottle (3) from ether start aid valve assembly (8). Discard ether bottle (3).

(4) Disconnect plug (5).

(5) Loosen tube (7) from fitting (6) on ether start aid valve assembly (8).

(6) Remove tube (7) from ether start aid valve assembly (8).

(7) Remove two capscrews (9), clamp (10), and ether start aid valve assembly (8) from bracket (14).

(8) Remove two nuts (12), lockwashers (13), capscrews (11), and bracket (14) from air dryer mounting bracket (17). Discard lockwashers (13).

(9) Remove two nuts (15) and lockwashers (16) behind air dryer mounting bracket (17). Discard lockwashers (16).

(10) Remove ether bottle mounting bracket (18), two nuts (20), lockwashers (21), and studs (19). Discard lockwashers (21).

NOTE

If atomizer (22) and tube (7) will be replaced, follow steps (11) through (13).

Remove ties as needed to free tube (7) from wiring harness.

(11) Loosen tube nut (23) and remove tube (7) from atomizer (22).

(12) Remove atomizer (22) from blower inlet housing (24).

(13) Remove tube (7) from vehicle.

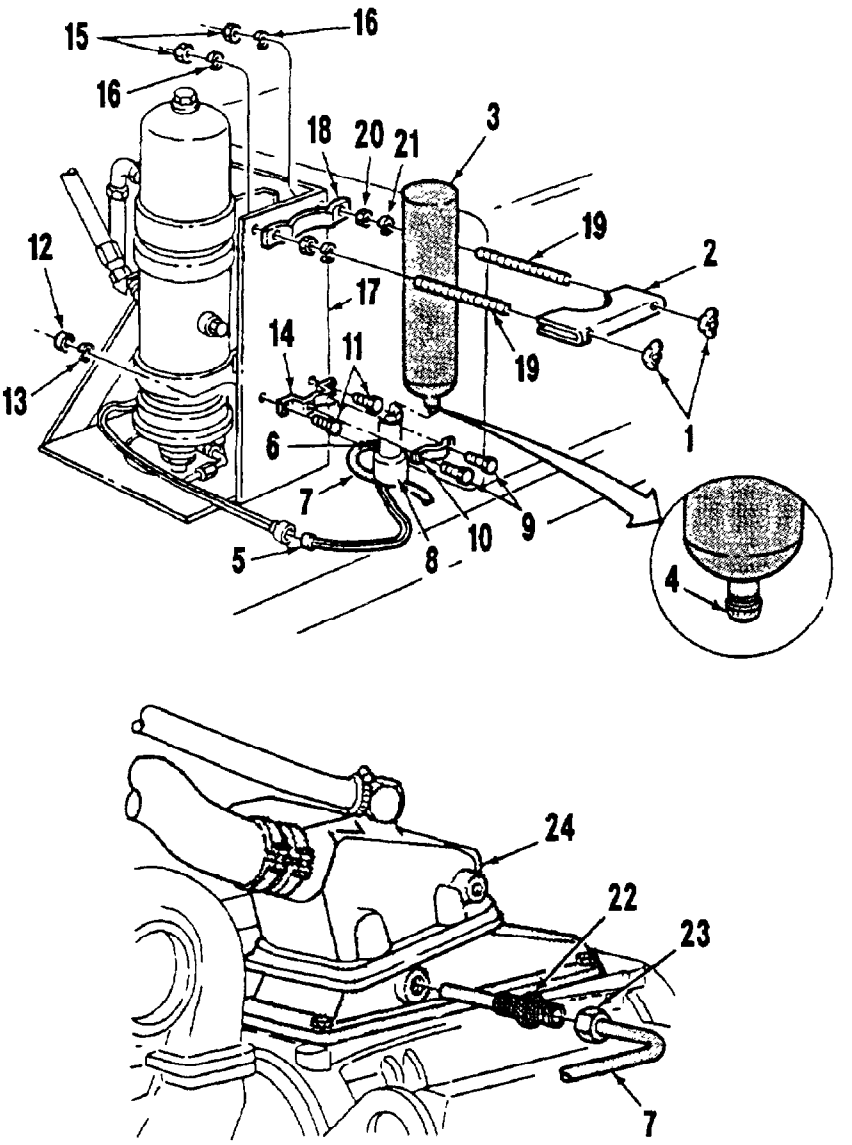

1. Wing Nut (2)
2. Ether Bottle Clamp
3. Ether Bottle
4. Shipping Cap
5. Plug
6. Fitting
7. Tube
8. Ether Start Aid Valve Assembly
9. Capscrew (2)
10. Clamp
11. Capscrew (2)
12. Nut (2)
13. Lockwasher (2)
14. Bracket
15. Nut (2)
16. Lockwasher (2)
17. Air Dryer Mtg Brkt
18. Ether Bottle Mtg Brkt
19. Stud (2)
20. Nut (2)
21. Lockwasher (2)
22. Atomizer
23. Tube Nut
24. Blower Inlet Housing

Figure 2-47. Ether Bottle

b. Air Dryer

WARNING

Air lines under pressure will move violently when removed. To prevent personal injury, drain all air pressure from system before removing pressurized components.

NOTE

Tag all air lines and electrical wires before removal to ensure proper installation.

(1) Remove three air lines (1, 2, and 3, Figure 2-48) from air dryer (9).

NOTE

Mounting hardware for air dryer has changed from a lockwasher, washer, and nut to a flanged style locknut and capscrew. When repairing a non-A1 series vehicle us the new style mounting hardware to replace the old style hardware. Refer to TM 9-2320-297-24P for correct parts identification.

(2) Remove four locknuts (4) and capscrews (7). Discard locknuts (4).

(3) Lift air dryer (9) slightly and pull boot (10) away from terminal (11).

(4) Remove nut (12) and lockwasher (13) from terminal (11). Discard lockwasher (13).

(5) Remove wire (14) from terminal (11).

(6) Remove air dryer (9) from air dryer mounting bracket (15).

c. Air Dryer Mounting Bracket

NOTE

Mounting hardware for air dryer bracket has changed from a lockwasher, nut, and capscrew to a flanged style locknut and capscrew. When repairing a non-A1 series vehicle use the new style mounting hardware to replace the old style hardware. Refer to TM 9-2320-297-24P for correct parts identification.

(1) Remove four locknuts (3, Figure 2-49) and capscrews (4) from air dryer mounting bracket (1). Discard locknuts (3).

2-36. HYDRAULIC OIL FILTER HOUSING AND OIL LEVEL GAUGE

WARNING

Hydraulics may be under pressure and can spurt out when lines are disconnected. To prevent personal injury, crack all lines slowly, keep face clear of lines, and wear safety glasses when working with hydraulic system.

NOTE

Tag all air lines and electrical wires before removal to ensure proper installation.

Place a container under hydraulic lines to catch any oil that may spill when lines are removed.

a. Hydraulic Oil Filter Housing

(1) Remove two hydraulic lines (2 and 3, Figure 2-50) from hydraulic oil filter housing (1).

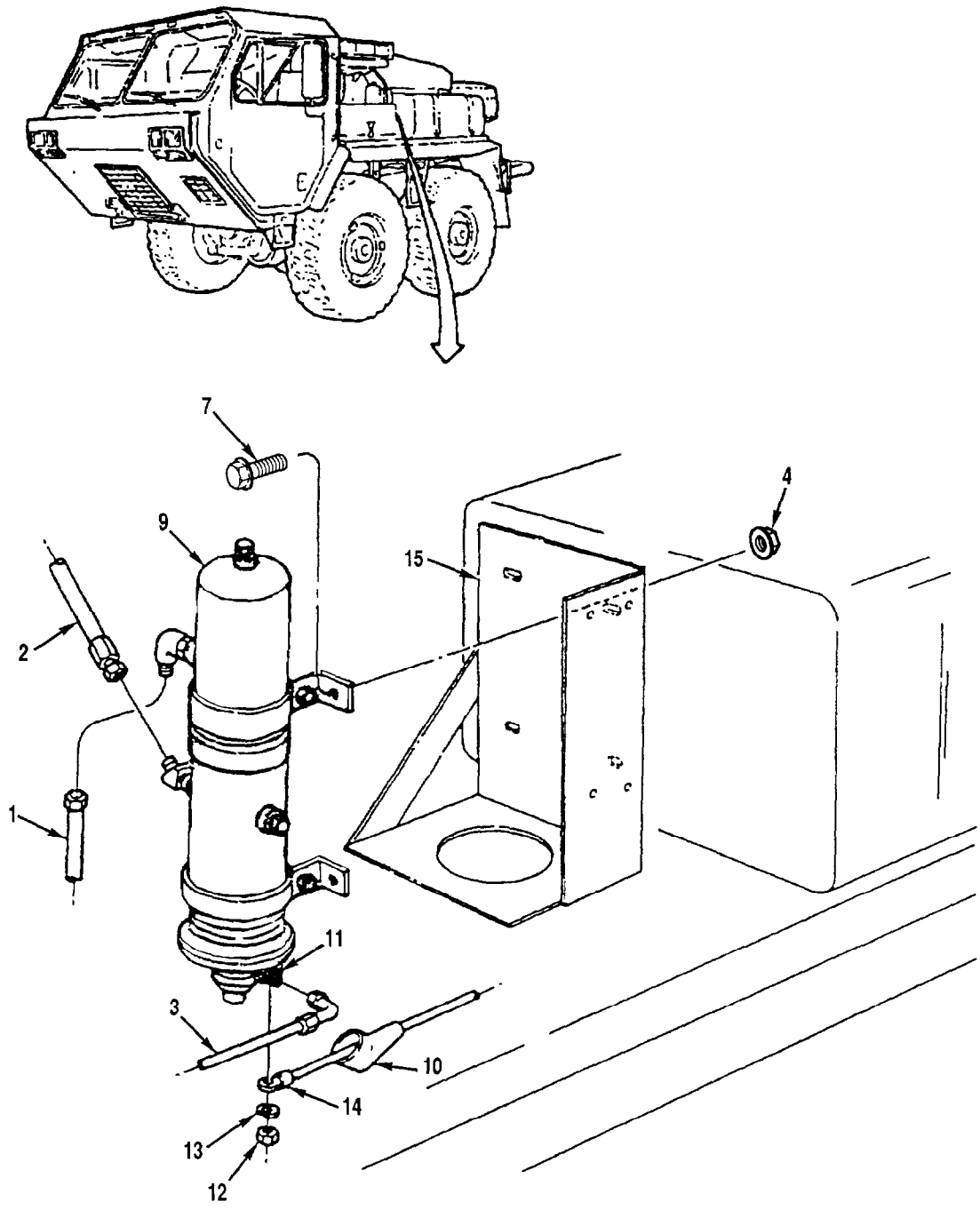

1. Air Line
2. Air Line
3. Air Line
4. Locknut (4)
5. Deleted
6. Deleted
7. Capscrew (4)
8. Deleted
9. Air Dryer
10. Boot
11. Terminal
12. Nut
13. Lockwasher
14. Wire
15. Air Dryer Mtg. Brkt

Figure 2-48. Air Dryer

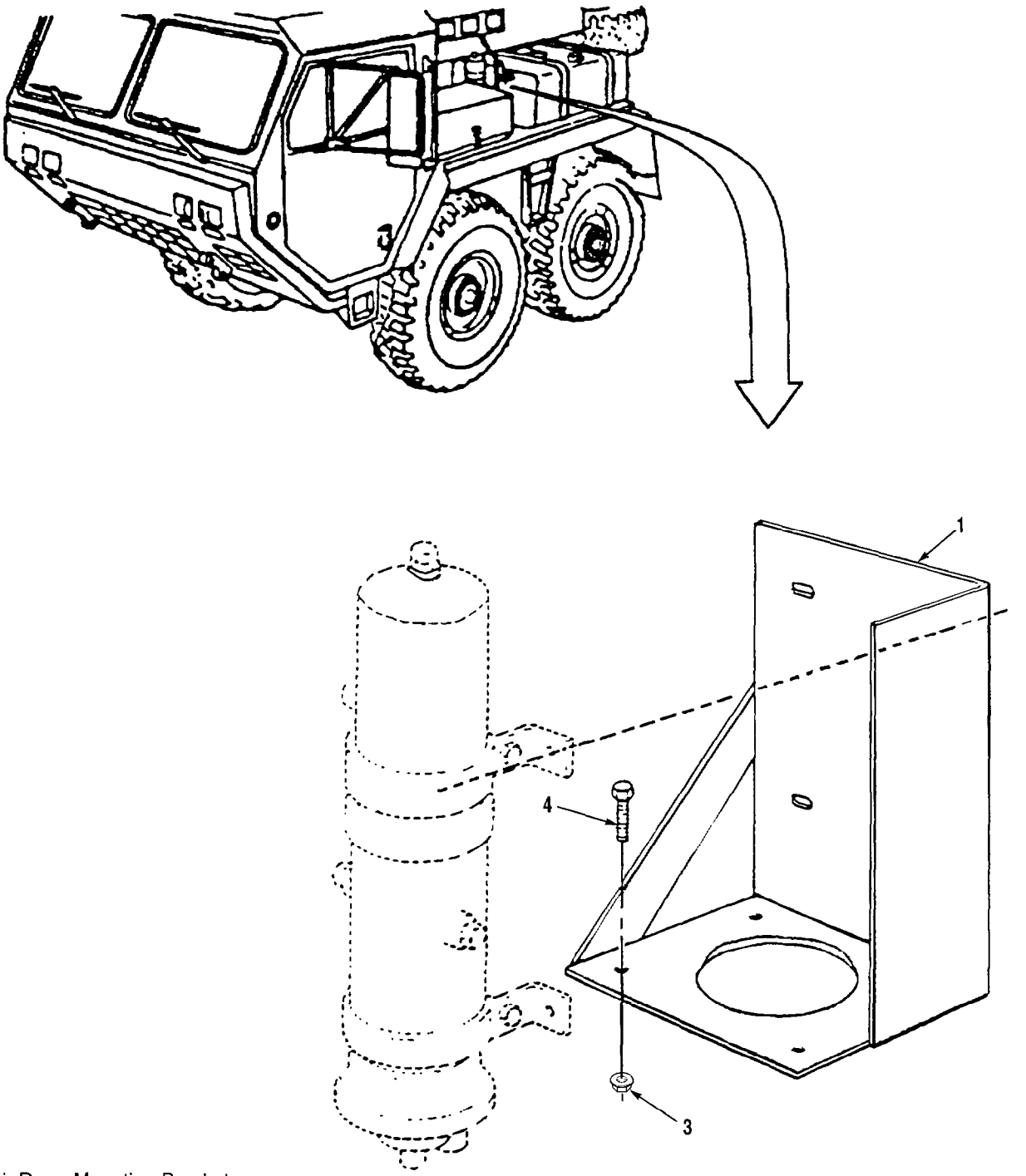

1. Air Dryer Mounting Bracket
2. Deleted
3. Locknut (4)
4. Capscrew (4)

Figure 2-49. Air Dryer Mounting Bracket

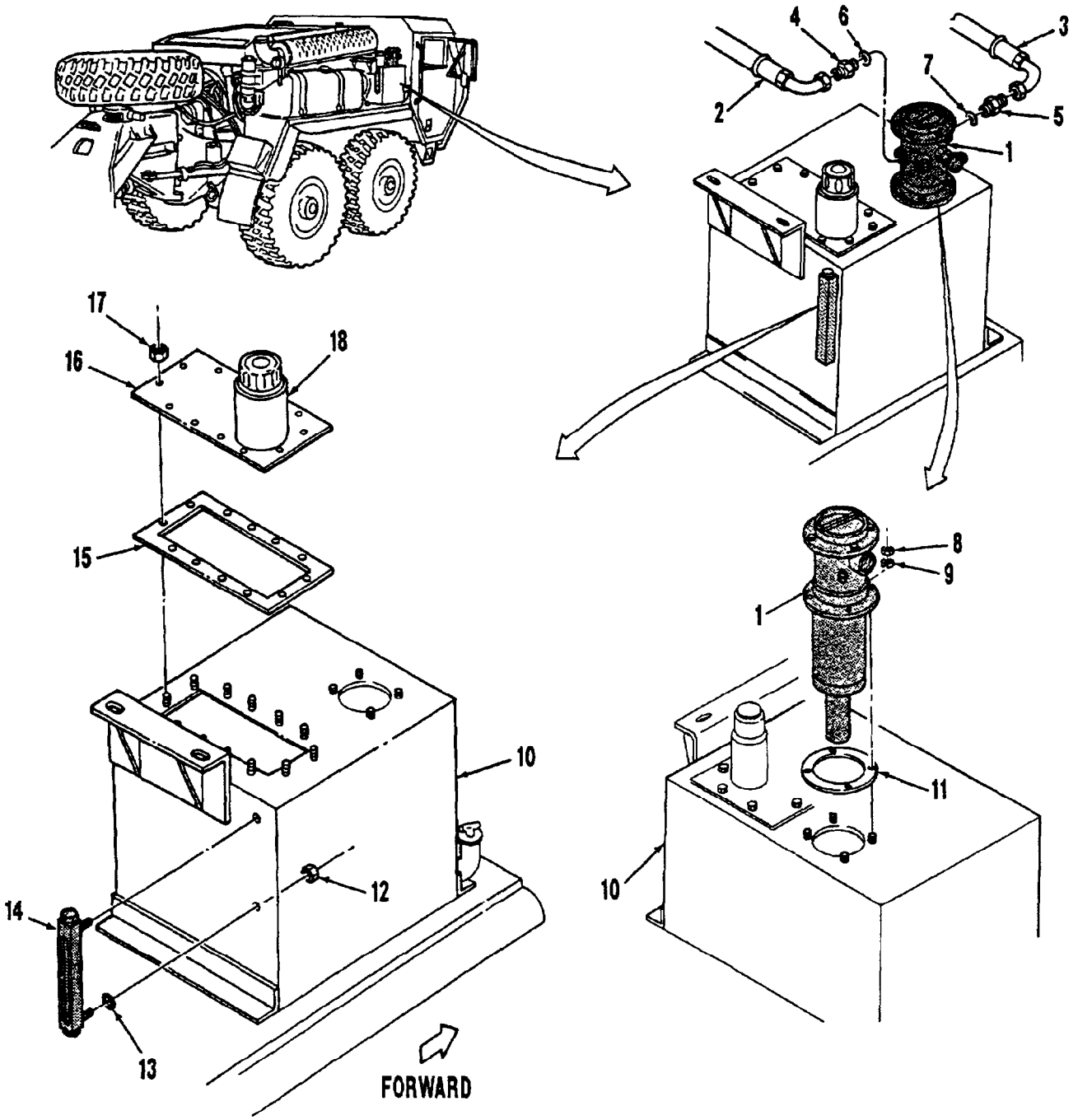

1. Hyd Oil Filter Housing
2. Hydraulic Line
3. Hydraulic Line
4. Adapter
5. Adapter
6. O-Ring
7. O-Ring
8. Nut (4)
9. Lockwasher (4)
10. Hydraulic Oil Reservoir
11. Gasket
12. Nut (2)
13. O-Ring (2)
14. Hydraulic Oil Level Gauge
15. Gasket
16. Access Plate
17. Self-Locking Nut (12)
18. Filler Neck

Figure 2-50. Hydraulic Oil Filter Housing and Oil Level Gauge

(2) Remove two adapters (4 and 5) from hydraulic oil filter housing (1).

(3) Remove two O-rings (6 and 7) from two adapters (4 and 5). Discard O-rings (6 and 7).

(4) Remove four nuts (8) and lockwashers (9) from hydraulic oil reservoir (10). Discard lockwashers (9).

(5) Remove hydraulic oil filter housing (1) from hydraulic oil reservoir (10).

(6) Remove gasket (11) from hydraulic oil reservoir (10). Discard gasket (11).

b. Hydraulic Oil Level Gauge

(1) Remove 12 self-locking nuts (17) from access plate (16). Discard self-locking nuts (17).

(2) Remove access plate (16) with filler neck (18) from hydraulic oil reservoir (10).

(3) Remove gasket (15) from hydraulic oil reservoir (10). Discard gasket (15).

(4) Remove two nuts (12), through access hole, from hydraulic oil level gauge (14).

(5) Remove hydraulic oil level gauge (14) with two O-rings (13) from hydraulic oil reservoir (10). Discard O-rings (13).

2-37. HYDRAULIC OIL RESERVOIR

WARNING

Hydraulics may be under pressure and can spurt out when lines are disconnected. To prevent personal injury, crack all lines slowly, keep face clear of lines, and wear safety glasses when working with hydraulic system.

NOTE

Tag all hydraulic lines and electrical wires before removal to ensure proper installation.

Remove nylon ties (7) as necessary during removal procedures.

a. Remove two capscrews (1, Figure 2-51), nuts (2), and lockwashers (3) from hydraulic oil manifold (4). Discard lockwashers (3).

b. Push hydraulic oil manifold (4) back and away from hydraulic oil reservoir (5).

c. Tie hydraulic oil manifold (4) out of the way and remove hydraulic line (6).

d. Disconnect plug (8) and remove sending unit (9) from hydraulic oil reservoir (5).

e. Remove four nuts (11), lockwashers (12), capscrews (10), and one ground wire (13) from hydraulic oil reservoir (5). Discard lockwashers (12).

f. Tie engine oil fill tube (14) out of the way.

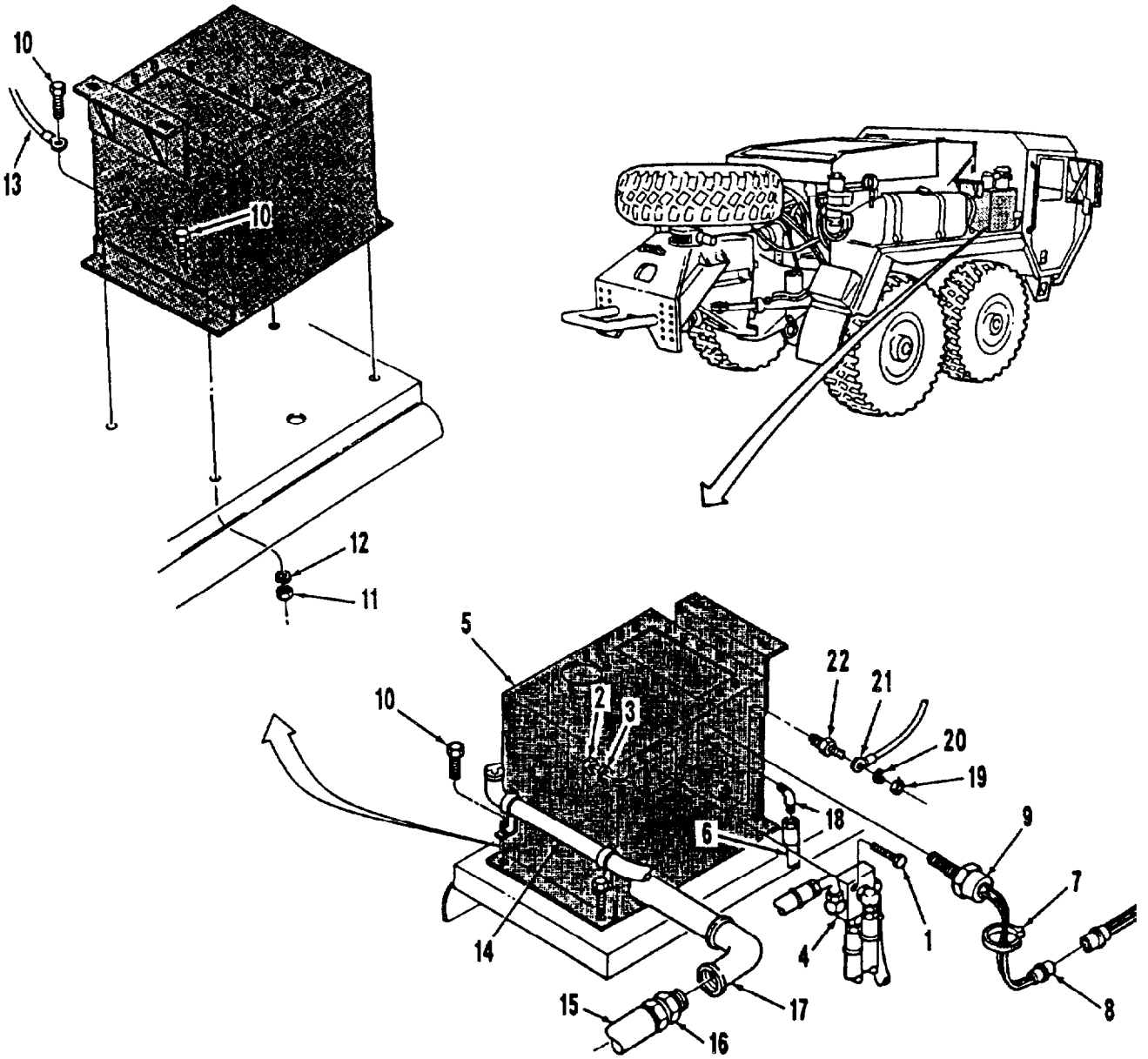

1. Capscrew (2)
2. Nut (2)
3. Lockwasher (2)
4. Hydraulic Oil Manifold
5. Hydraulic Oil Reservoir
6. Hydraulic Line
7. Nylon Ties
8. Plug
9. Sending Unit
10. Capscrew (4)
11. Nut (4)
12. Lockwasher (4)
13. Ground Wire
14. Engine Oil Fill Tube
15. Hydraulic Oil Supply Line
16. Adapter
17. 90° Hydraulic Oil Supply Line Elbow
18. 90° Elbow
19. Nut
20. Lockwasher
21. Wire
22. Sending Unit

Figure 2-51. Hydraulic Oil Reservoir

NOTE

Place a container under hydraulic lines to catch any oil that may spill when lines are removed.

g. Remove hydraulic oil supply line (15), adapter (16), and 90° hydraulic oil supply line elbow (17) from hydraulic oil reservoir (5).

h. Remove 90° elbow (18) from hydraulic oil reservoir (5).

i. Remove nut (19), lockwasher (20), and wire (21) from sending unit (22). Discard lockwasher (20).

j. Remove sending unit (22) from hydraulic oil reservoir (5).

WARNING

The hydraulic oil reservoir is very heavy. To prevent personal injury, use lifting device to remove hydraulic oil reservoir from vehicle.

To prevent personal injury, direct personnel to stand clear of hydraulic oil reservoir during removal procedures.

k. Lift and remove hydraulic oil reservoir (5) from vehicle using an overhead lifting device.

2-38. DIRECTIONAL RELIEF VALVE

WARNING

Hydraulics may be under pressure and can spurt out when lines are disconnected. To prevent personal injury, crack all lines slowly, keep face clear of lines, and wear safety glasses when working with hydraulic system.

NOTE

Tag all hydraulic lines and electrical wires before removal to ensure proper installation.

Place a container under hydraulic lines to catch any oil that may spill when lines are removed.

a. Remove three hydraulic lines (1, 2, and 3, Figure 2-52) from tee fitting (11) and 90° elbow (13) respectively.

b. Unsnap keeper (4) and disconnect plug (5).

NOTE

Perform step b.1 on LVSA1 series vehicles only.

b.1. Loosen screw (5.1) and remove connector (5.2) and gasket (5.3). Discard gasket (5.3).

c. Remove two nuts (6), lockwasher (7), capscrews (8), directional relief valve (9), and plate (10) from mounting surface (15). Discard lockwashers (7).

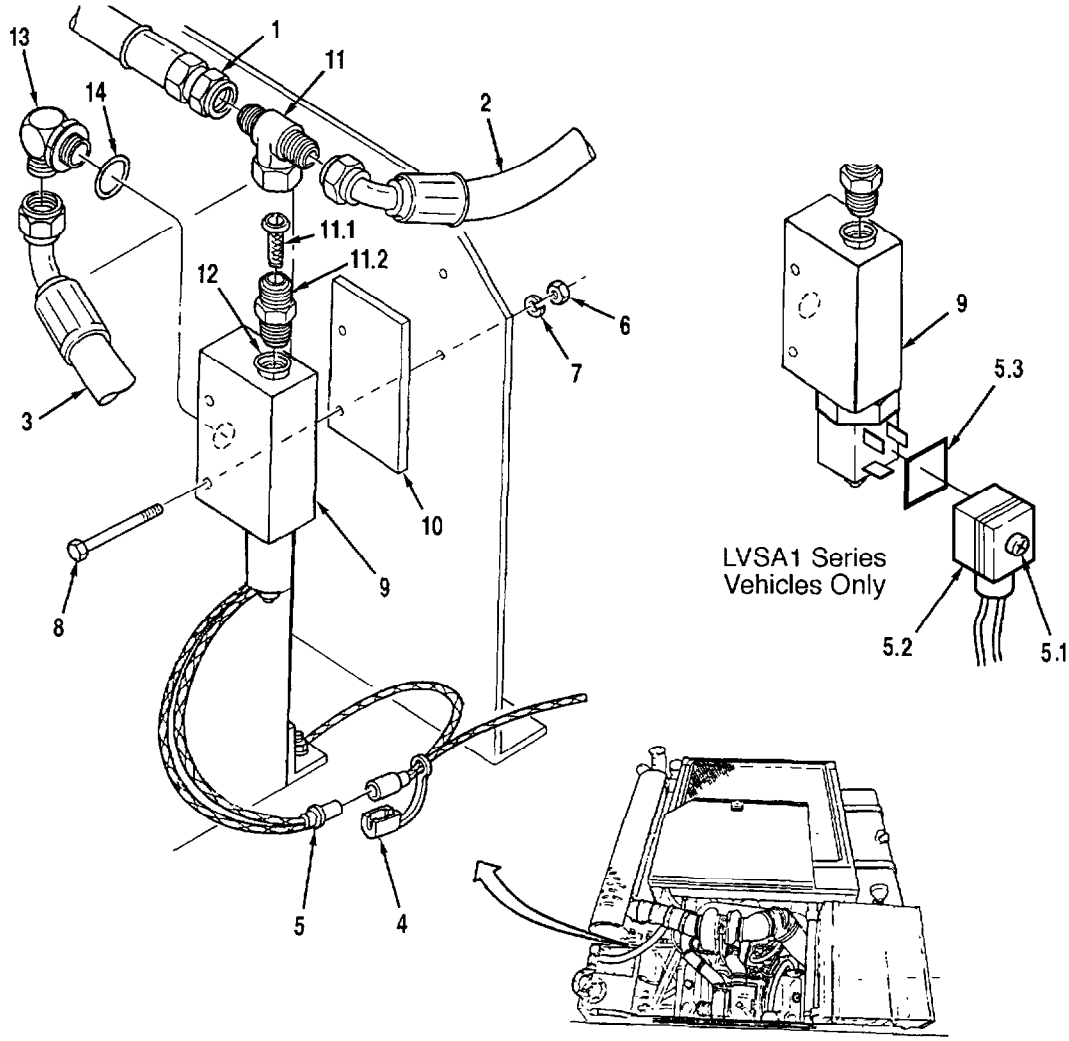

1. Hydraulic Line
2. Hydraulic Line
3. Hydraulic Line
4. Keeper
5. Plug
5.1. Screw*
5.2. Connector*
5.3. Gasket*
6. Nut (2)
7. Lockwasher (2)
8. Capscrew (2)
9. Directional Relief Valve
10. Plate
11. Tee Fitting
11.1. Filter Screen
11.2. Adapter
12. O-Ring
13. 90° Elbow
14. O-Ring
15. Mounting Surface

* LVSA1 Series Vehicles Only

Figure 2-52. Directional Relief Valve

d. Remove tee fitting (11) and filter screen (11.1) from adapter (11.2).

d.1. Remove adapter (11.2) and O-ring (12) from directional relief valve (9). Discard O-ring (12).

e. Remove 90° elbow (13) and O-ring (14) from directional relief valve (9). Discard O-ring (14).

2-39. STEERING SELECTOR VALVE AND SWITCH

WARNING

Hydraulics may be under pressure and can spurt out when lines are disconnected. To prevent personal injury, crack all lines slowly, keep face clear of lines, and wear safety glasses when working with hydraulic system.

NOTE

Tag all hydraulic lines and electrical wires before removal to ensure proper installation.

Place a container under hydraulic lines to catch any oil that may spill when lines are removed.

a. Remove four hydraulic lines (1, 2, 3, and 4, Figure 2-53) from steering selector valve (8).

b. Remove two screws (15), star washers (16), and wires (17) from steering selector switch (20). Discard star washers (16).

c. Remove nuts (18 and 19) from steering selector switch (20).

d. Remove steering selector switch (20) from bracket (14).

e. Remove nuts (21 and 22) from steering selector switch (20).

f. Remove three nuts (5) and lockwashers (6) from under right fender (7). Discard lockwashers (6).

g. Lift steering selector valve (8) and remove three capscrews (9) and washers (10).

h. Remove capscrew (11), lockwasher (12), washer (13), and bracket (14) from steering selector valve (8). Discard lockwasher (12).

i. Remove steering selector valve (8) from right fender (7).

2-40. TRANSMISSION OIL FILTER, ADAPTER, AND MOUNTING BRACKET

a. Transmission Oil Filter

NOTE

Place a container under transmission oil filter to catch transmission oil that may spill during removal procedures.

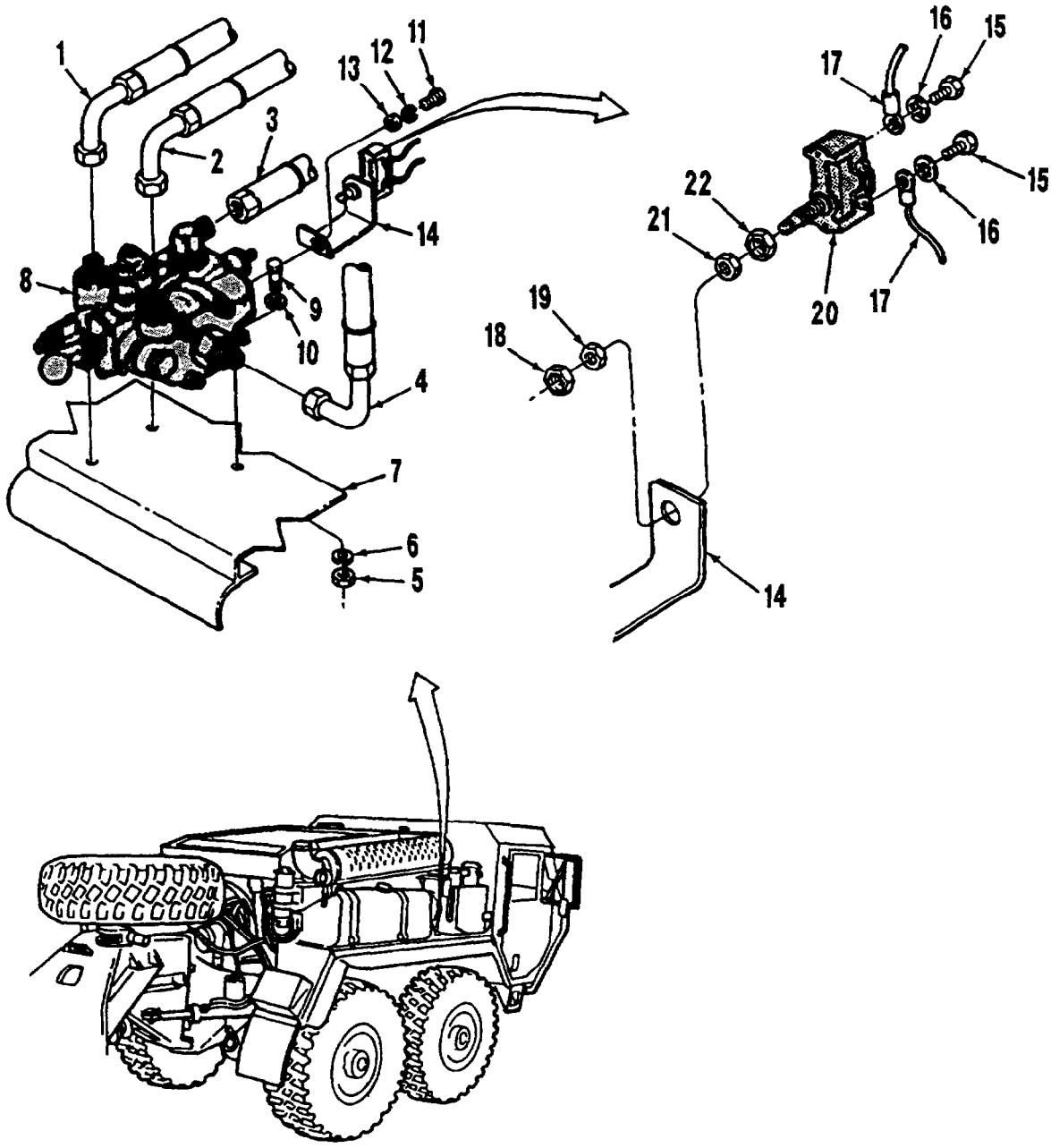

1. Hydraulic Line
2. Hydraulic Line
3. Hydraulic Line
4. Hydraulic Line
5. Nut (3)
6. Lockwasher (3)
7. Right Fender
8. Steering Selector Valve
9. Capscrew (3)
10. Washer (3)
11. Capscrew
12. Lockwasher
13. Washer
14. Bracket
15. Screw (2)
16. Star Washer (2)
17. Wire (2) (No. 843)
18. Nut
19. Nut
20. Steering Selector Switch
21. Nut
22. Nut

Figure 2-53. Steering Selector Valve and Switch

NOTE

Tag all oil lines and electrical wires before removal to ensure proper installation.

(1) Remove transmission oil filter (8, Figure 2-54) from transmission oil filter adapter (11) by turning it in a counterclockwise direction.

(2) Dispose of transmission oil filter (8) properly.

b. Transmission Oil Filter Adapter

(1) Remove two oil lines (10) from adapter (10A) and boss adapter (10B).

(2) Remove four nuts (12), lockwashers (13), capscrews (1), and transmission oil filter adapter (11) from transmission oil filter mounting bracket (9). Discard lockwashers (13).

(3) Remove adapter (10A) and boss adapter (10B) from transmission oil filter adapter (11) and remove O-ring (not shown) from adapter (10A) and O-ring, washer, and nut (not shown) from boss adapter (10B). Discard O-rings (not shown).

c. Transmission Oil Filter Mounting Bracket

(1) Remove four nuts (7) and lockwashers (6) from under right fender (5). Discard lockwashers (6).

(2) Remove four capscrews (2), ground wire (3), and lockwasher (4) from transmission oil filter mounting bracket (9). Discard lockwasher (4).

(3) Remove transmission oil filter mounting bracket (9) from right fender (5).

2-41. STEERING WHEEL

a. Depress and rotate horn button (1, Figure 2-55) 1/4 turn counterclockwise.

b. Remove horn button (1), cup (2), and spring (3) from steering wheel (8).

NOTE

Note location of long screw (5) to ensure proper installation.

c. Remove two short screws (4) and long screw (5) from base plate (6).

d. Remove base plate (6) from steering wheel (8).

e. Remove nut (7) from steering column shaft (12).

f. Using a puller, remove steering wheel (8) from steering column shaft (12) and steering column (9).

NOTE

Note location of screws (10) to ensure proper installation.

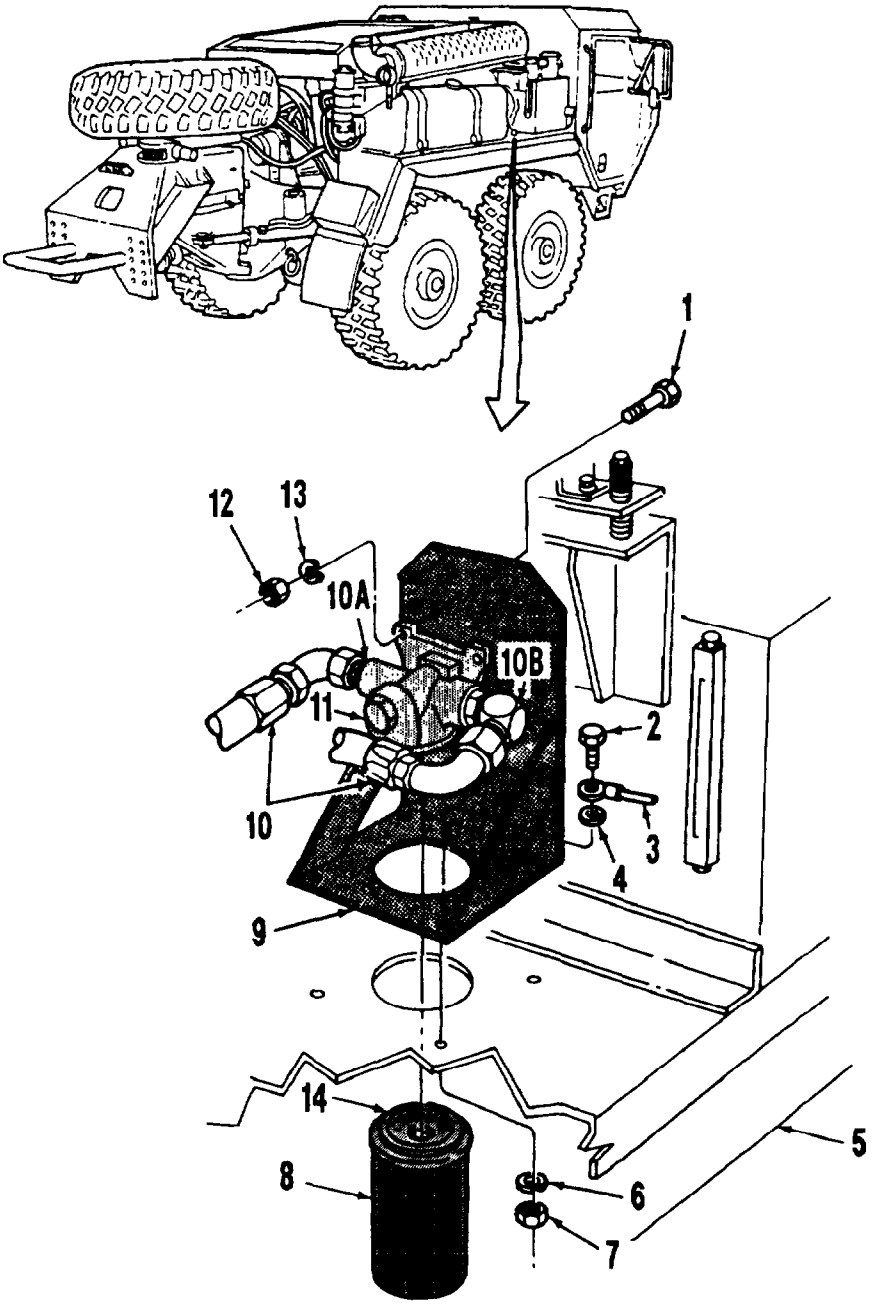

1. Capscrew (4)
2. Capscrew (4)
3. Ground Wire
4. Lockwasher
5. Right Fender
6. Lockwasher (4)
7. Nut (4)
8. Transmission Oil Filter
9. Transmission Oil Filter Mounting Bracket
10. Oil Line (2)
10A. Adapter
10B. Boss Adapter
11. Transmission Oil Filter Adapter
12. Nut (4)
13. Lockwasher (4)
14. Transmission Oil Filter Seal

Figure 2-54. Transmission Oil Filter, Adapter, and Mounting Bracket

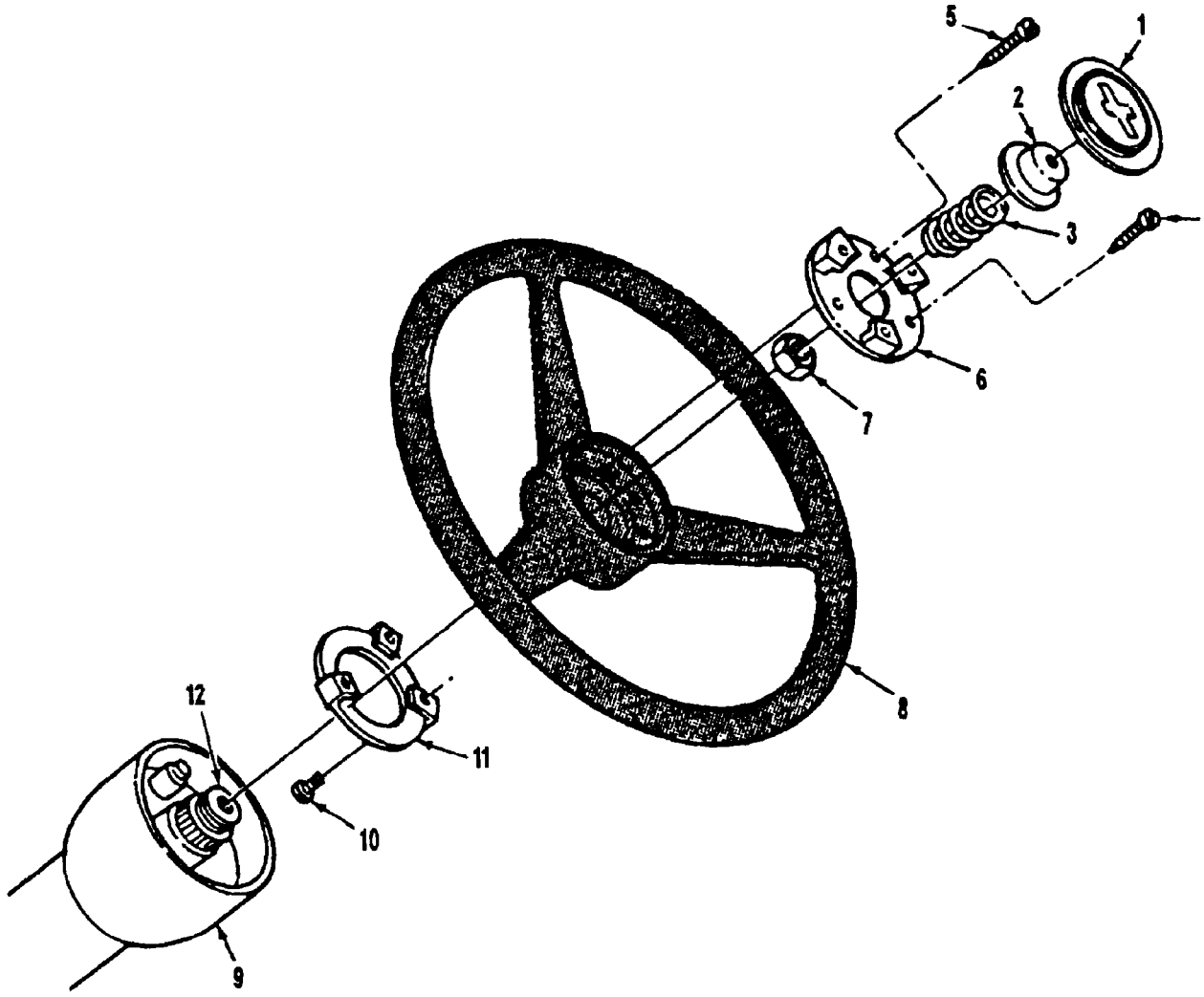

1. Horn Button
2. Cup
3. Spring
4. Short Screw (2)
5. Long Screw
6. Base Plate
7. Nut
8. Steering Wheel
9. Steering Column
10. Screw (2)
11. Contact Plate
12. Steering Column Shaft

Figure 2-55. Steering Wheel

g. Turn steering wheel (8) over and remove two screws (10).

h. Remove contact plate (11) from steering wheel (8).

2-42. HEADLIGHT SHIELDS

NOTE

Headlight shields (2 and 8, Figure 2-56) are located under dash panel (12) in front of the headlight wiring harness (10).

Some LVS models use a new-style turn signal flasher (4) that is mounted with left headlight shield (2) mounting hardware. Follow procedure a(2) for LVS models with new-style turn signal flasher (4).

Tag all wires before removal to ensure proper installation.

a. Left Headlight Shield

(1) Old-Style Turn Signal Flasher

(a) Remove four screws (1, Figure 2-56) from left headlight shield (2).

(b) Lower left headlight shield (2) and remove old-style turn signal flasher (11) from clip (9).

(c) Remove left headlight shield (2) from under dash panel (12).

(2) New-Style Turn Signal Flasher

(a) Remove three screws (1) from left headlight shield (2).

(b) Remove locknut (3), ground wire (6), new-style turn signal flasher (4), and capscrew (5) from left headlight shield (2). Discard locknut (3).

(c) Remove left headlight shield (2) from under dash panel (12).

b. Right Headlight Shield

(1) Remove four screws (7) from right headlight shield (8).

(2) Remove right headlight shield (8) from under dash panel (12).

2-43. TURN SIGNAL SWITCH AND FLASHER

WARNING

To prevent personal injury, disconnect batteries. Do not wear watches, rings, and other jewelry when working on electrical components.

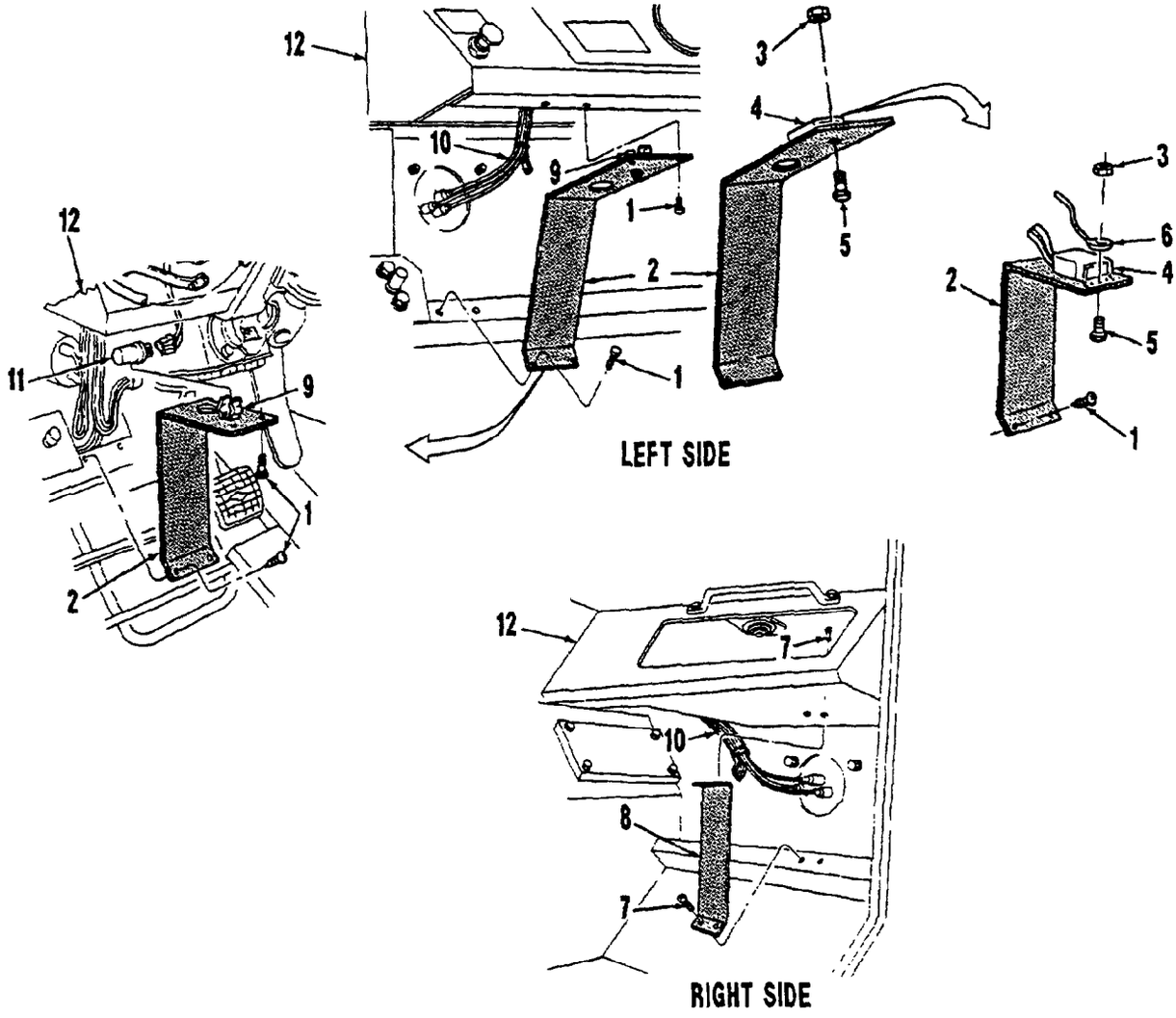

1. Screw (4)
2. Left Headlight Shield
3. Locknut
4. New-Style Turn Signal Flasher
5. Capscrew
6. Ground Wire
7. Screw (4)
8. Right Headlight Shield
9. Clip
10. Headlight Wiring Harness
11. Old-Style Turn Signal Flasher
12. Dash Panel

Figure 2-56. Headlight Shields

NOTE

Tag all wires before removal to ensure proper installation.

Remove nylon ties, as needed. Note location to ensure proper installation.

a. Unplug five wires (11, Figure 2-57) coming from turn signal switch (10) to wiring harness.

b. Measure two inches (5.08 cm) from flasher plug (7) and cut wire (6).

c. Remove nut (1), lockwasher (2), and capscrew (5) from clamp (3). Discard lockwasher (2).

d. Remove clamp (9) from around steering column (4).

e. Remove turn signal switch (10) and flasher (8) from steering column (4).

f. Remove turn signal flasher (8) from flasher plug (7).

2-43.1. TURN SIGNAL SWITCH AND FLASHER (LVSA1 SERIES VEHICLES ONLY)

NOTE

Remove nylon ties as needed. Note location for proper installation.

Note location of harness routing for proper installation.

a. Remove two locknuts (1, Figure 2-57.1) and capscrews (2). Discard locknuts (1).

b. Unscrew flasher connector (3) and remove flasher (4).

NOTE

Remove additional terminals as necessary. Note locations to ensure proper installation.

c. Remove nut (5), terminal (6), and lockwasher (7). Discard lockwasher (7).

d. Unscrew signal connector (8) from turn signal switch assembly (9).

e. Loosen clamp screw (10) and remove pads (12) and turn signal switch assembly (9) from steering column (13).

f. Remove nut (14) and wire clamp (15) from harness (16).

g. Disconnect weather pack terminal (17) and remove harness (16).

2-44. STEERING COLUMN

WARNING

To prevent personal injury, disconnect batteries. Do not wear watches, rings, and other jewelry when working on electrical components.

NOTE

Tag all wires before removal to ensure proper installation.

a. Disconnect horn wire (1, Figure 2-58) at quick disconnect (13) under dash panel behind steering column (2).

b. Remove clamping capscrew (3) and locknut (4) from end yoke (5). Discard locknut (4).

c. Spread end yoke (5) slightly with drift pin.

d. Remove two capscrews (6), lockwashers (7), and nuts (8) that hold steering column (2) and front and rear caps (9) to steering column brace (10). Discard lockwashers (7).

e. Lower steering column (2) and remove two caps (9) and two pads (11).

f. Remove steering column (2) by sliding steering column splines (12) up and out of end yoke (5).

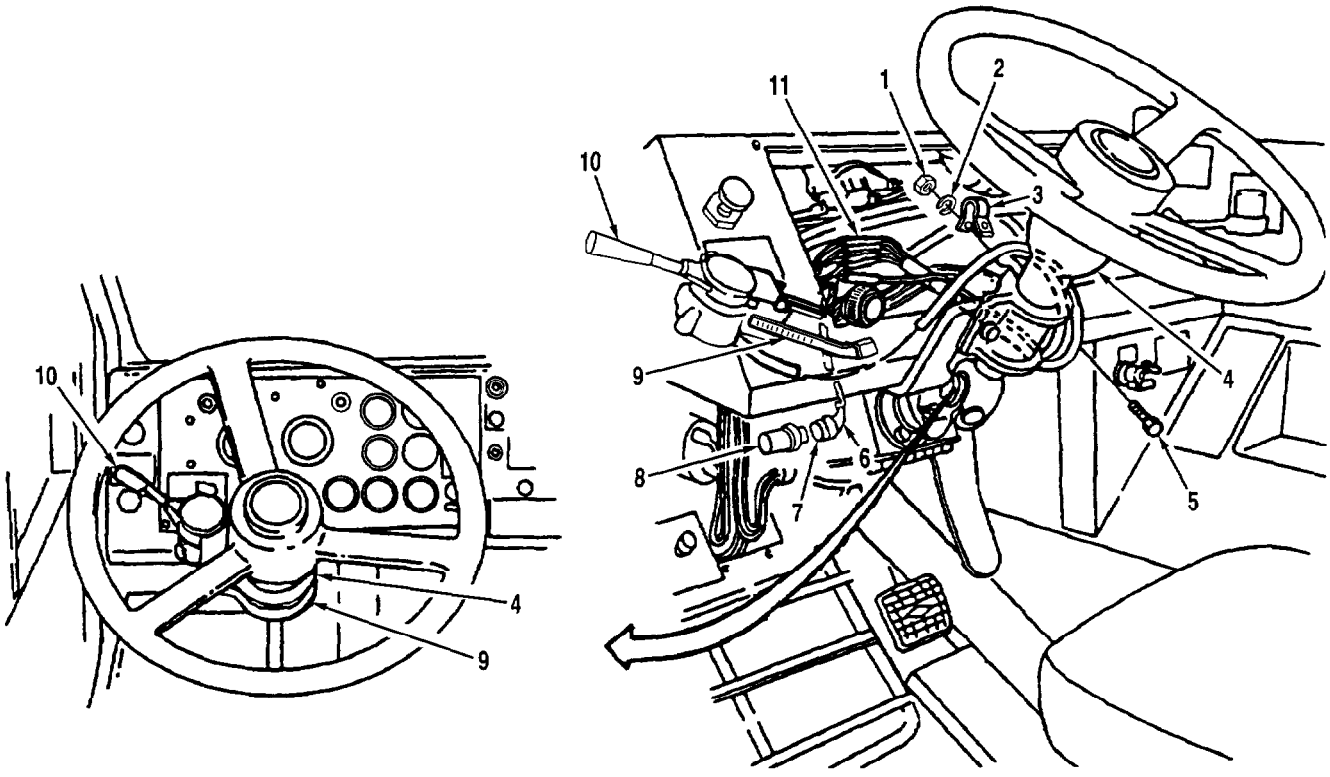

1. Nut
2. Lockwasher
3. Clamp
4. Steering Column
5. Capscrew
6. Wire
7. Flasher Plug
8. Flasher
9. Clamp
10. Turn Signal Switch
11. Wire (5)

Figure 2-57. Turn Signal Switch and Flasher

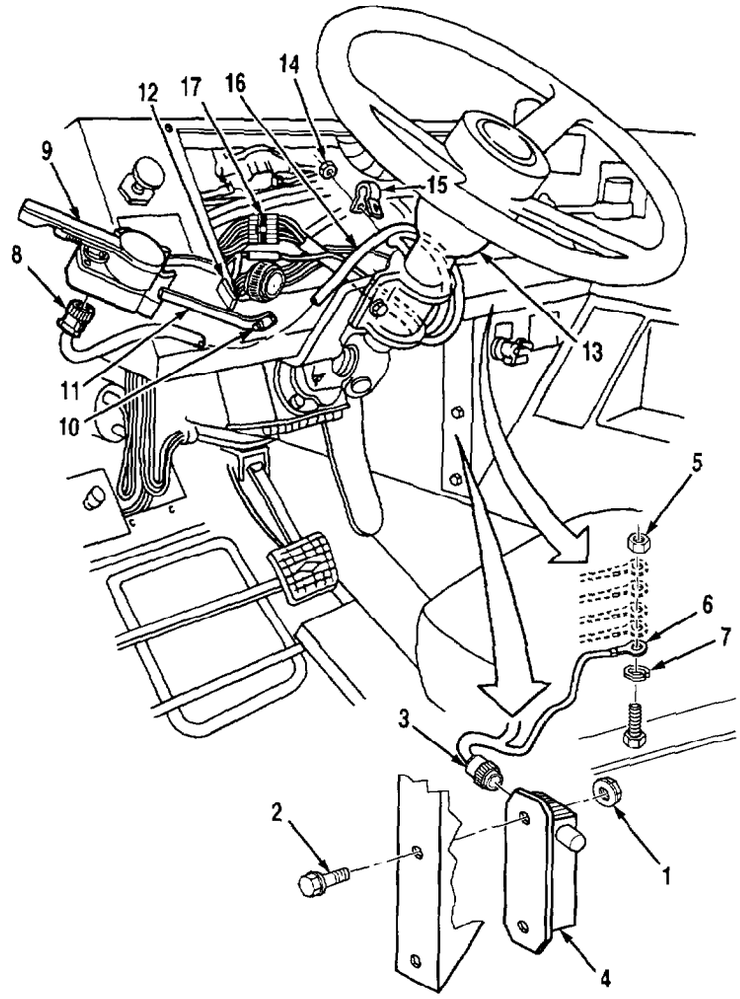

1. Locknut (2)
2. Capscrew (2)
3. Flasher Connector (MC29)
4. Flasher
5. Nut
6. Terminal (1435)
7. Lockwasher
8. Signal Connector (MC28)
9. Turn Signal Switch Assembly
10. Clamp Screw
11. Clamp
12. Pad (2)
13. Steering Column
14. Nut
15. Wire Clamp
16. Harness
17. Weather Pack Terminal (MC30)

Figure 2-57.1. Turn Signal Switch and Flasher (LVSA1 Series Vehicles Only).

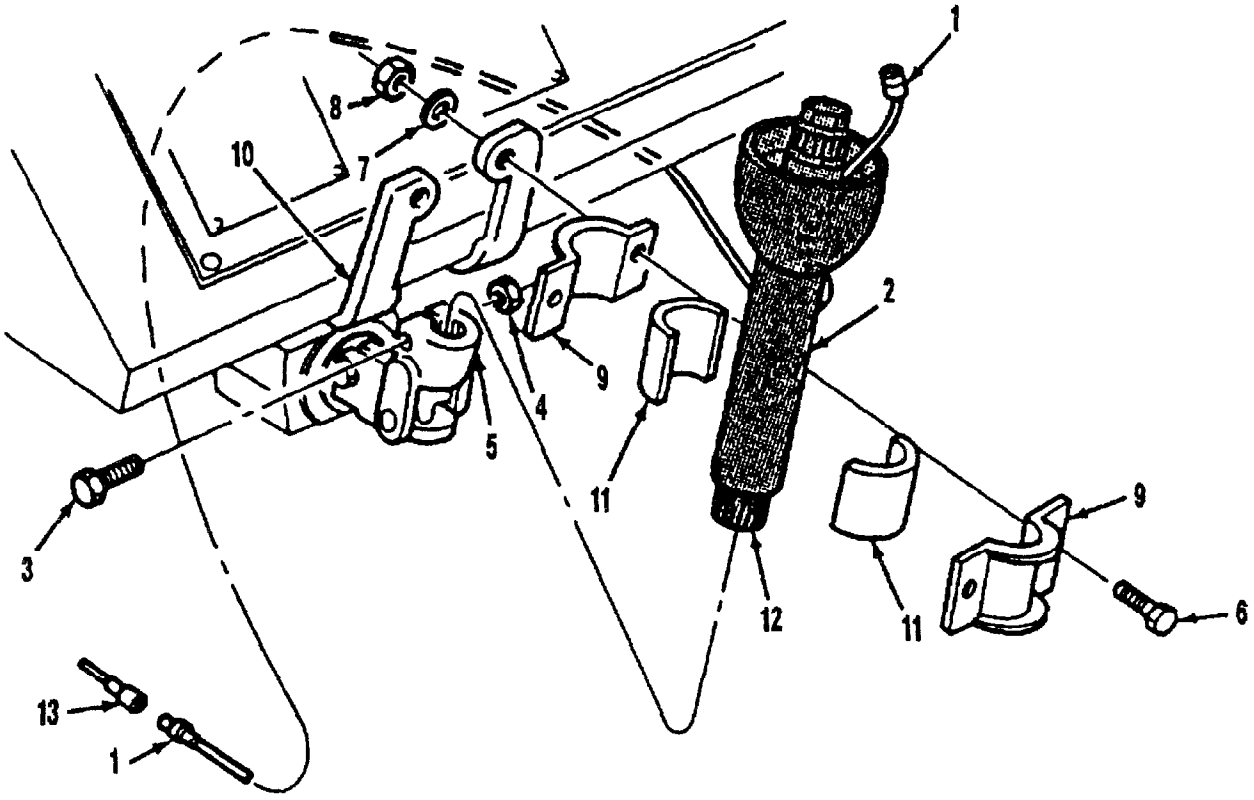

1. Horn Wire
2. Steering Column
3. Clamping Capscrew
4. Locknut
5. End Yoke
6. Capscrew (2)
7. Lockwasher (2)
8. Nut (2)
9. Cap (2)
10. Steering Column Brace
11. Pad (2)
12. Steering Column Spline
13. Quick Disconnect

Figure 2-58. Steering Column

2-45. UNIVERSAL JOINT AND STEERING LINKAGE

NOTE

All three end yoke assemblies on the MK48 are removed and disassembled in the same way. They differ only in location.

a. Universal Joint

(1) Remove clamping capscrew (1, Figure 2-59) and nut (2) from end yoke (3).

(2) Spread end yoke (3) slightly, and remove end yoke assembly (4).

(3) Remove two keys (5) from steering linkage (14).

(4) Remove four snaprings (6) from bearing caps (7).

(5) Remove four bearing caps (7) and universal joint (8).

b. Steering Linkage

(1) Remove three nuts (9), capscrews (10), lockwashers (11), and carrier bearing supports (12). Discard lockwashers (11).

(2) Remove carrier bearing (13) and steering linkage (14) from end yokes (3).

(3) Remove carrier bearing (13) from steering linkage (14).

2-46. CAB 90° GEAR BOX

a. Remove four capscrews (1, Figure 2-60) and lockwashers (2) from cab 90° gear box (4). Discard lockwashers (2).

b. Lower cab 90° gear box (4) from mounting bracket (3).

c. Remove cab 90° gear box (4) from vehicle.

2-47. STOP LIGHT SWITCHES

WARNING

To prevent personal injury, disconnect batteries. Do not wear watches, rings, and other jewelry when working on electrical components.

NOTE

This procedure will work for stop light switches (1, 2, 3, or 4, Figure 2-61) on brake treadle valve (5), hand control valve (6), and quick release valve (7).

There may be up to three wires on each terminal. Tag all wires before removal to ensure proper installation.

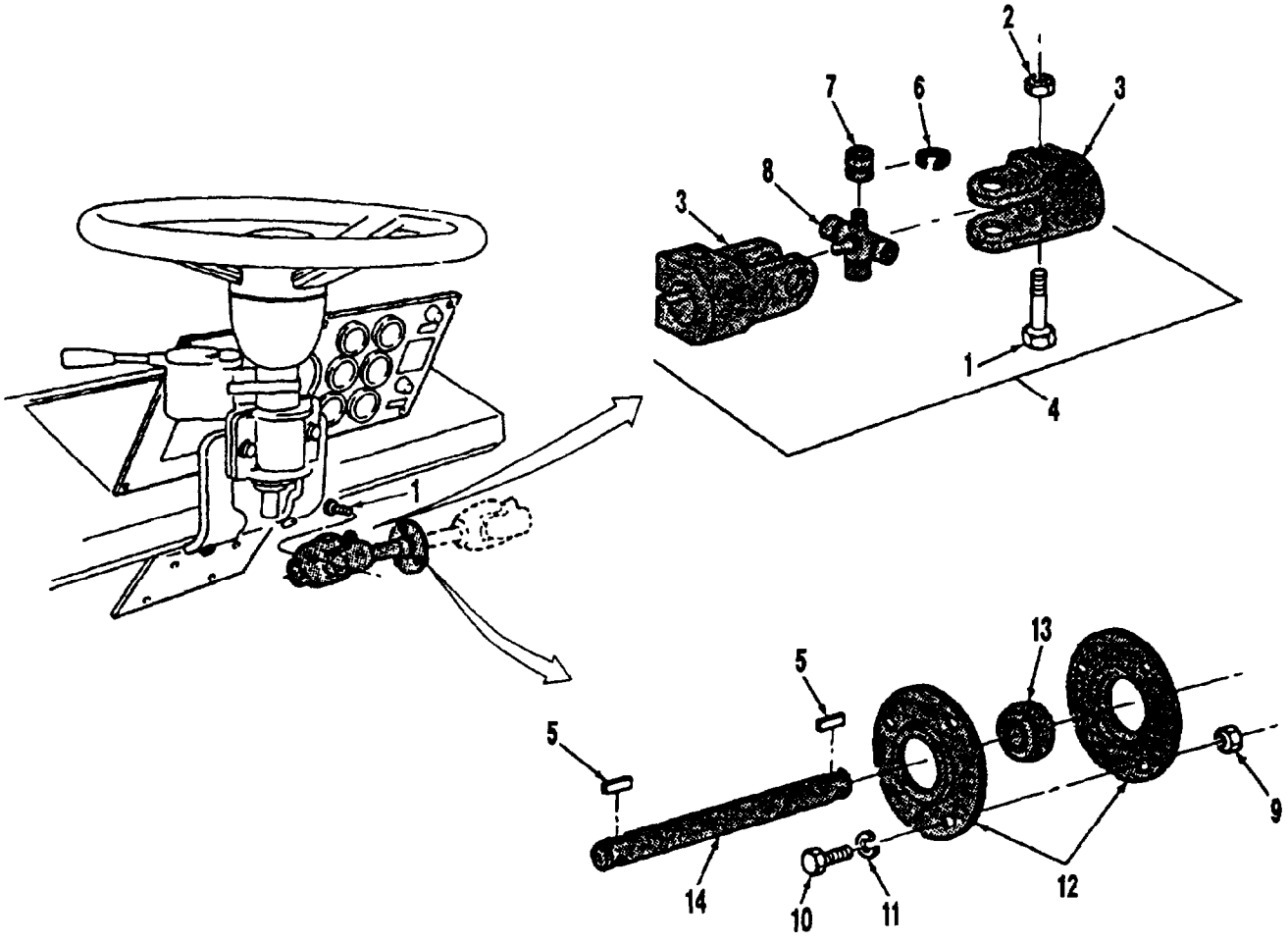

1. Clamping Capscrew (2)
2. Nut (2)
3. End Yoke (2)
4. End Yoke Assembly
5. Key (2)
6. Snapring (4)
7. Bearing Cap (4)
8. Universal Joint
9. Nut (3)
10. Capscrew (3)
11. Lockwasher (3)
12. Carrier Bearing Support (2)
13. Carrier Bearing
14. Steering Linkage

Figure 2-59. Universal Joint and Steering Linkage

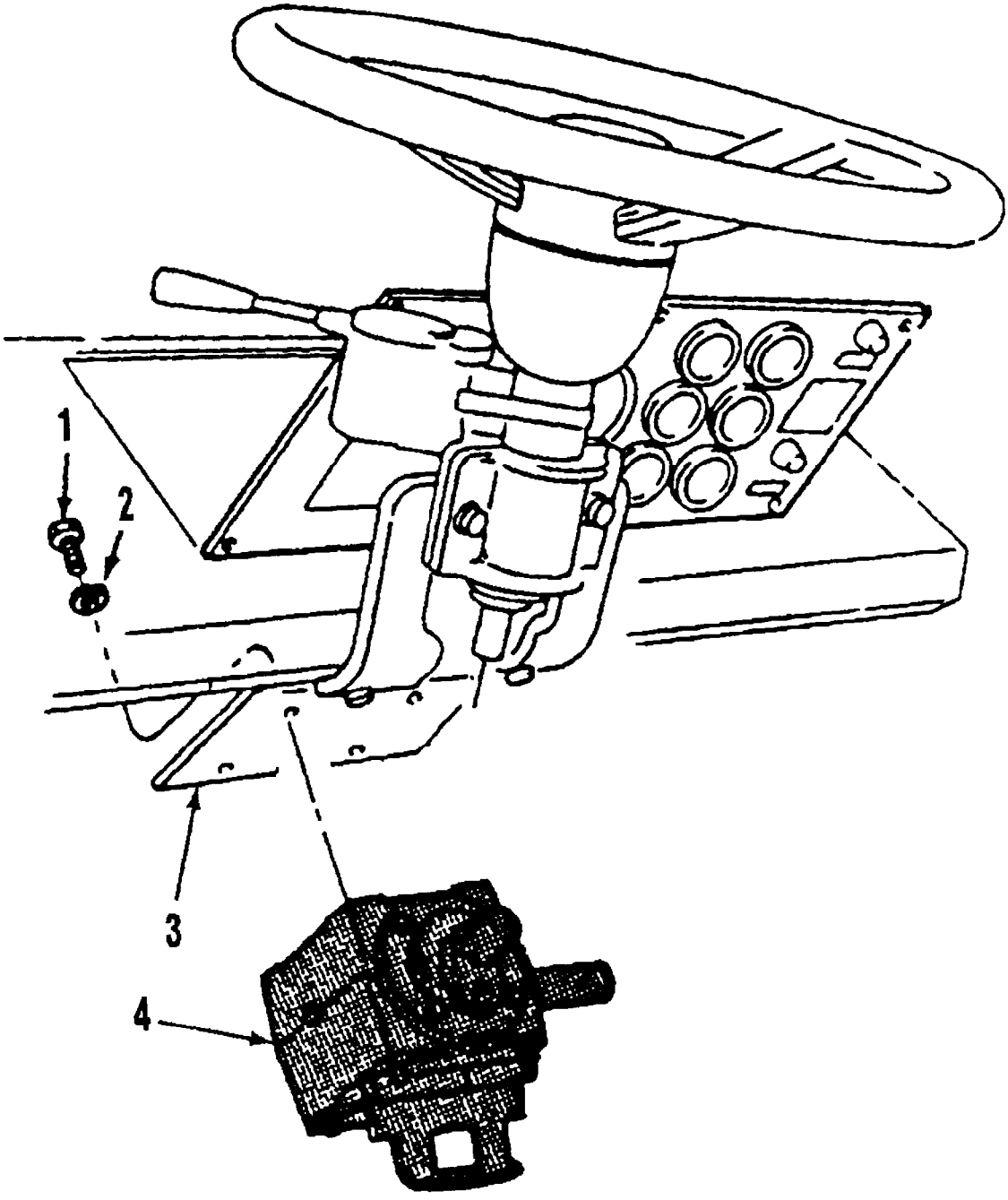

1. Capscrew (4)
2. Lockwasher (4)
3. Mounting Bracket
4. Cab 90° Gear Box

Figure 2-60. Cab 90 Degree Gear Box

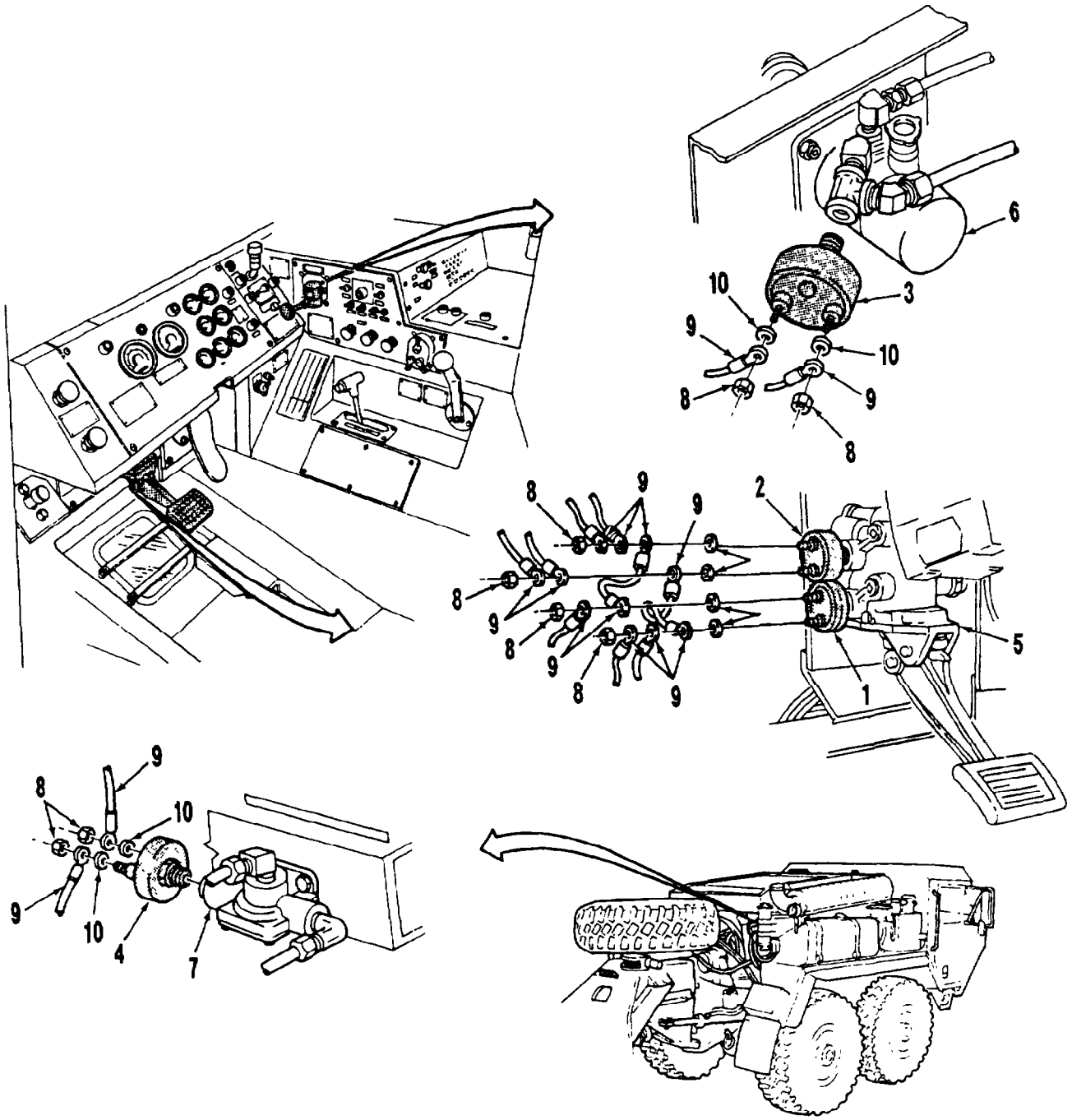

1. Stop Light Switch
2. Stop Light Switch
3. Stop Light Switch
4. Stop Light Switch
5. Brake Treadle Valve
6. Hand Control Valve
7. Quick Release Valve
8. Nut
9. Wire
10. Washer

Figure 2-61. Stop Light Switches

a. Remove two nuts (8) from stop light switch (1, 2, 3, or 4).

b. Remove two wires (9) and washers (10) from stop light switch (1, 2, 3, or 4).

c. Remove stop light switch (1, 2, 3, or 4) by turning counterclockwise.

2-48. LOW AIR PRESSURE SWITCHES

WARNING

To prevent personal injury, disconnect batteries. Do not wear watches, rings, and other jewelry when working on electrical components.

NOTE

This procedure works for both low air pressure switches.

Tag all wires before removal to ensure proper installation.

a. Remove wire (1, Figure 2-62) from low air pressure switch (2).

b. Remove low air pressure switch (2) from brake treadle valve (3).

2-49. BRAKE TREADLE VALVE

NOTE

Tag all air lines before removal to ensure proper installation.

a. Remove two air lines (4 and 5, Figure 2-63) from two 90° elbows (11).

b. Remove two nuts (8), capscrews (7), and lockwashers (6) from bottom of mounting plate (9). Discard lockwashers (6).

c. Remove two capscrews (3), lockwashers (2), and washers (1) from top of mounting plate (9). Discard lockwashers (2).

d. Remove four air lines (17, 18, 20, and 21) from 90° elbows (15, 16, 19, and 22) respectively.

e. Remove four 90° elbows (15, 16, 19, and 22) from back of brake treadle valve (10).

f. Remove three capscrews (14) and lockwashers (13) from back of mounting plate (9). Discard lockwashers (13).

g. Remove brake treadle valve (10) from mounting plate (9).

h. Remove two 90° elbows (11) from brake treadle valve (10).

i. Remove two plugs (12) from brake treadle valve (10).

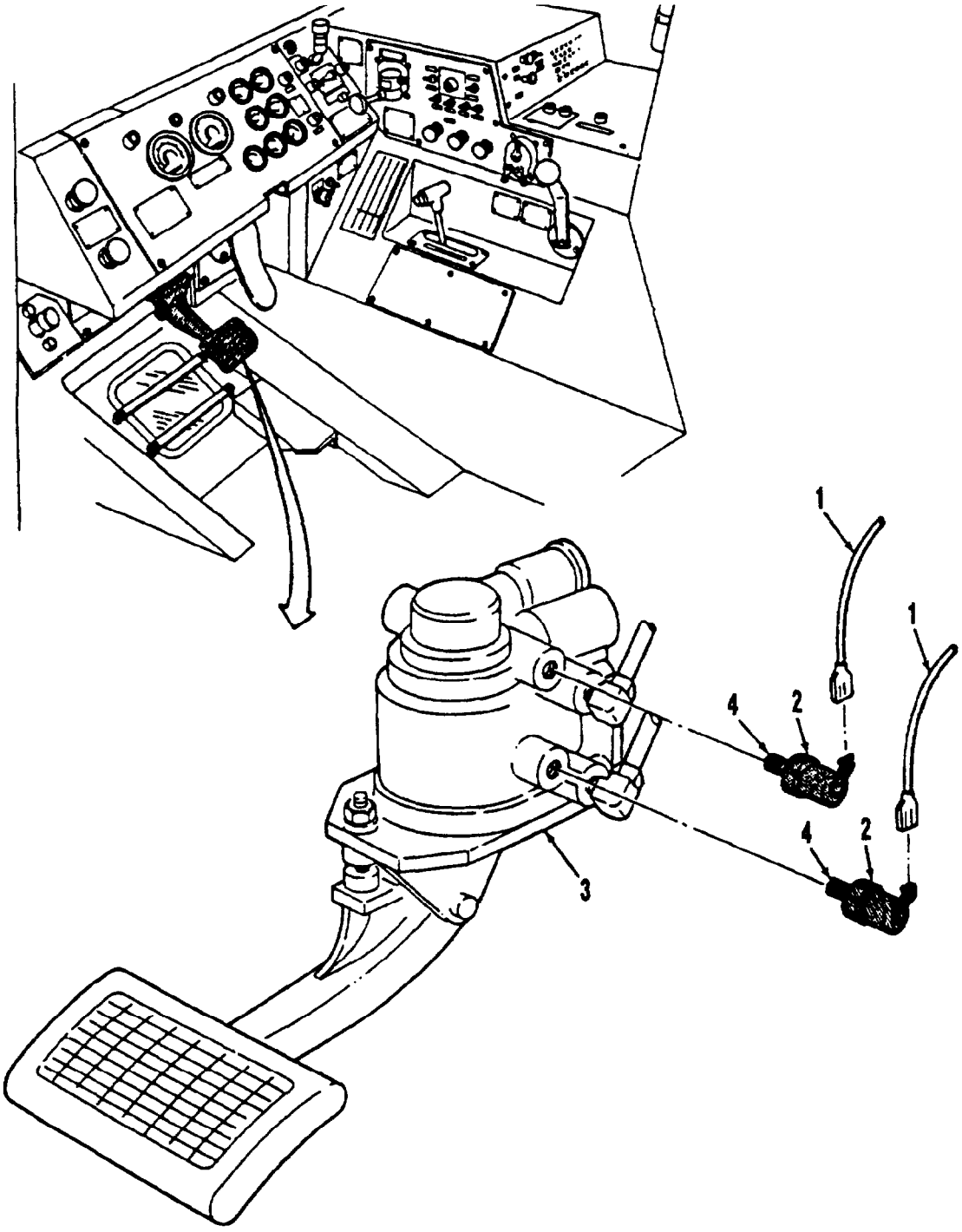

1. Wire (No. 005 or No. 009)
2. Low Air Pressure Switch (2)
3. Brake Treadle Valve
4. Threads

Figure 2-62. Low Air Pressure Switches

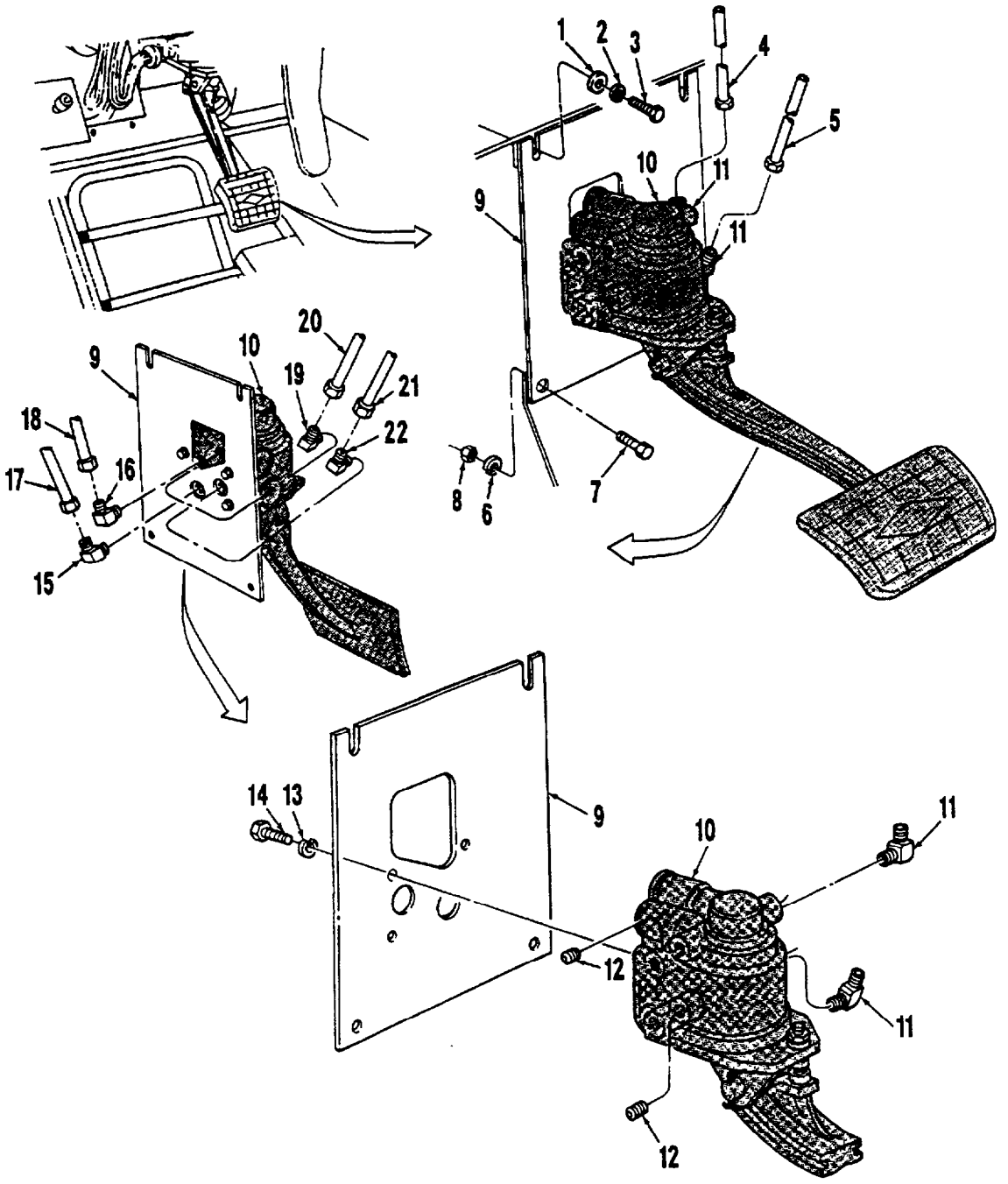

1. Washer (2)
2. Lockwasher (2)
3. Capscrew (2)
4. Air Line
5. Air Line
6. Lockwasher (2)
7. Capscrew (2)
8. Nut (2)
9. Mounting Plate
10. Brake Treadle Valve
11. 90° Elbow (2)
12. Plug (2)
13. Lockwasher (3)
14. Capscrew (3)
15. 90° Elbow
16. 90° Elbow
17. Air Line
18. Air Line
19. 90° Elbow
20. Air Line
21. Air Line
22. 90° Elbow

Figure 2-63. Brake Treadle Valve

2-50. THROTTLE TREADLE VALVE

NOTE

Throttle treadle valve disassembly and assembly instructions are applicable to LVSA1 and non-A1 vehicles.

a. Remove four capscrews (1, Figure 2-64), and lockwashers (2) from mounting plate (3). Discard lockwashers (2).

b. Pull throttle treadle valve (4) down for access to air lines (5 and 6).

WARNING

Air lines under pressure will move violently when removed. To prevent personal injury, drain all air pressure from system before removing pressurized components.

NOTE

Air lines are compression type lines. These air lines have sleeves inserted in ends to help support the line. They also use eyelets to seal the lines. When removing air lines, the eyelets may stay with the line or the fitting. Refer to Paragraph 2-14 in this manual.

Tag all air lines before removal to ensure proper installation.

c. While holding throttle treadle valve (4) securely, loosen line nuts (7 and 8) on air lines (5 and 6).

d. Remove air lines (5 and 6) from straight fittings (13 and 12) respectively.

e. Remove throttle treadle valve (4) and mounting plate (3) from vehicle.

f. Secure mounting plate (3) in a vise and remove three nuts (11), lockwashers (10), capscrews (9), and throttle treadle valve (4) from mounting plate. Discard lockwashers (10).

g. Secure throttle treadle valve (4) flange in vise and remove two straight fittings (12 and 13) from throttle treadle valve (4).

2-51. INSTRUMENT PANEL AIR MANIFOLDS

WARNING

Air lines under pressure will move violently when removed. To prevent personal injury, drain all air pressure from system before removing pressurized components.

NOTE

Tag all air lines before removal to ensure proper installation.

Tag left instrument panel air manifold to ensure proper installation.

a. Left Instrument Panel Air Manifold

(1) Remove two air lines (1 and 4, Figure 2-65, Sheet 1 of 2) from 90° elbows (10 and 11) respectively.

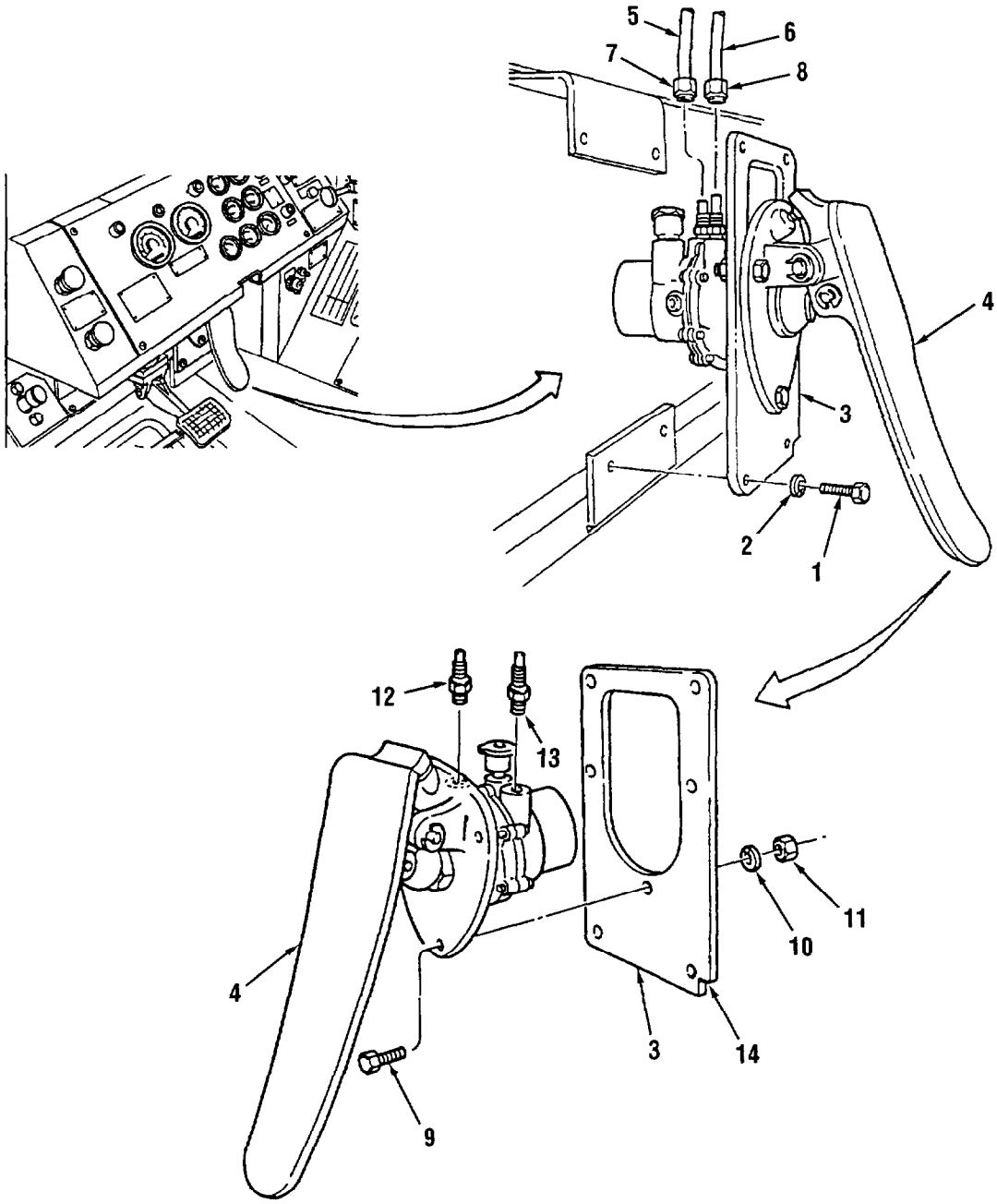

1. Capscrew (4)
2. Lockwasher (4)
3. Mounting Plate
4. Throttle Treadle Valve
5. Air Line
6. Air Line
7. Line Nut
8. Line Nut
9. Capscrew (3)
10. Lockwasher (3)
11. Nut (3)
12. Straight Fitting
13. Straight Fitting
14. Notch

Figure 2-64. Throttle Treadle Valve

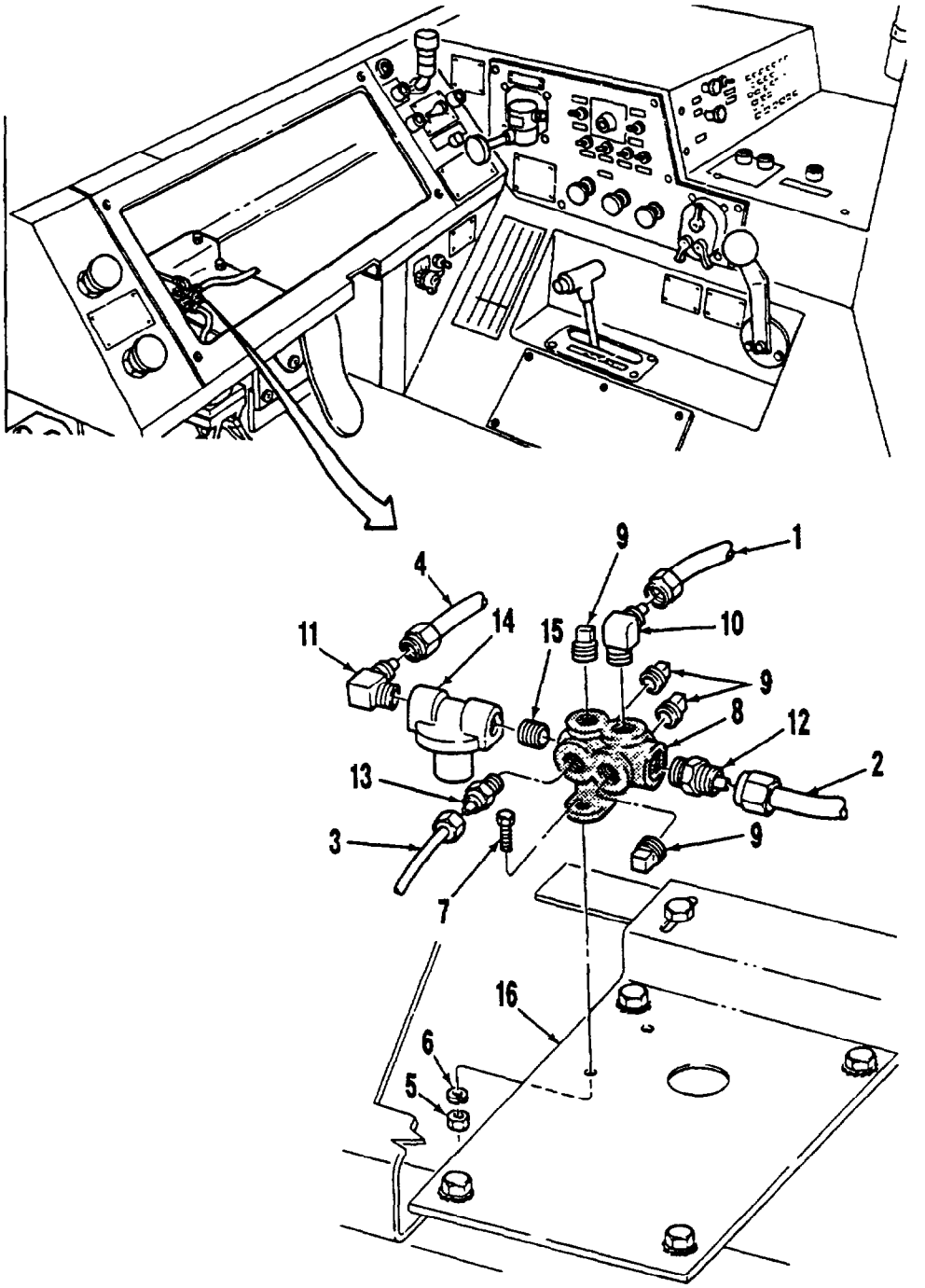

1. Air Line (No. 027)
2. Air Line (No. 006)
3. Air Line (No. 041)
4. Air Line (No. 073)
5. Nut (2)
6. Lockwasher (2)
7. Capscrew (2)
8. Left Instrument Panel Air Manifold
9. Plug (4)
10. 90° Elbow
11. 90° Elbow
12. Straight Fitting
13. Straight Fitting
14. Pressure Protection Valve
15. Nipple
16. Mounting Plate

Figure 2-65. Instrument Panel Air Manifolds
(Sheet 1 of 2)

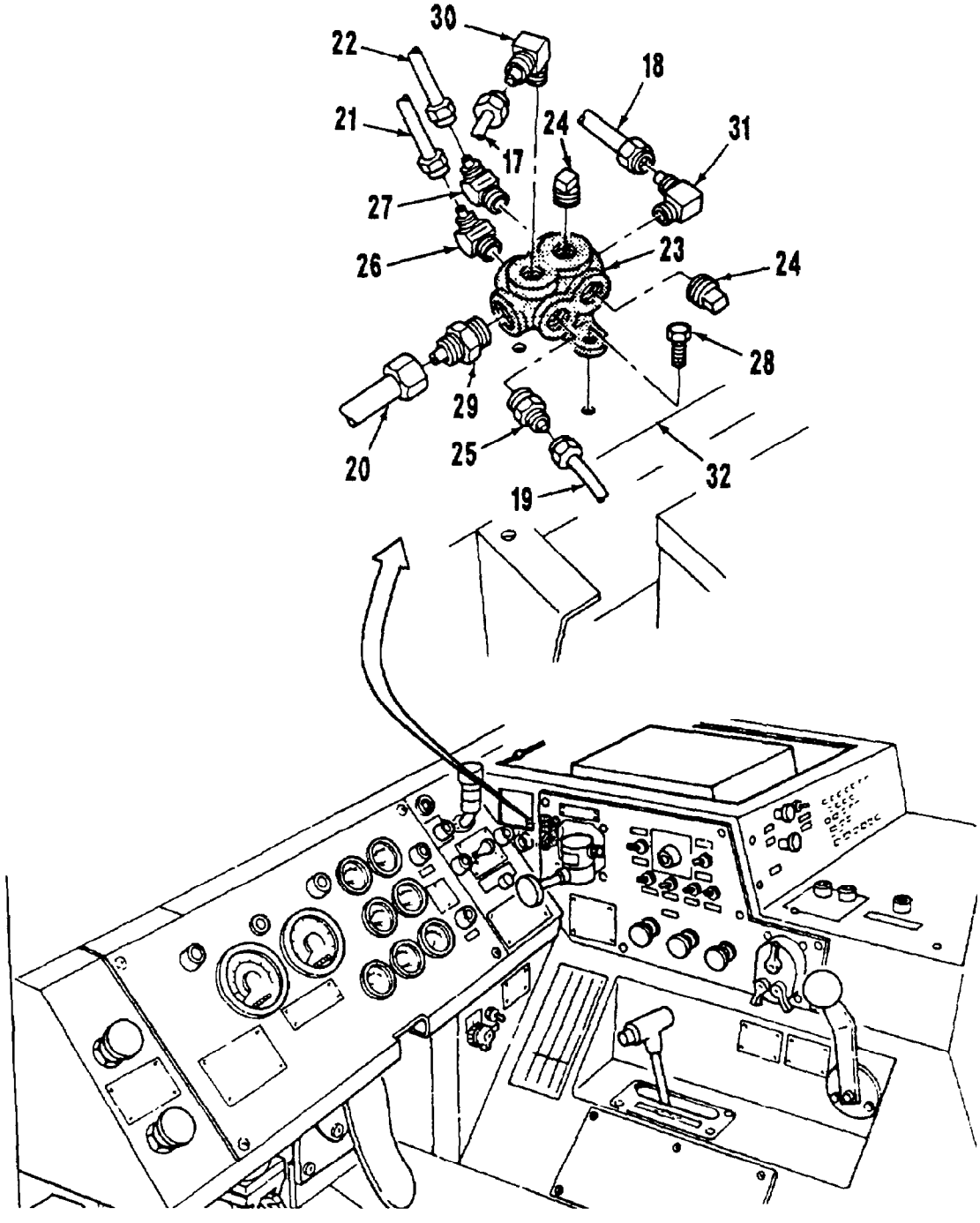

17. Air Line (No. 035)
18. Air Line (No. 071)
19. Air Line (No. 032)
20. Air Line (No. 073)
21. Air Line (No. 038)
22. Air Line (No. 074)
23. Right Instrument Panel Air Manifold
24. Plug (2)
25. Straight Fitting
26. 45° Elbow
27. 45° Elbow
28. Capscrew (2)
29. Straight Fitting
30. 90° Elbow
31. 90° Elbow
32. Mounting Plate

Figure 2-65. Instrument Panel Air Manifolds
(Sheet 2 of 2)

(2) Remove two air lines (2 and 3) from straight fittings (12 and 13) respectively.

(3) Remove two nuts (5), lockwashers (6), and capscrews (7) from left instrument panel air manifold (8). Discard lockwashers (6).

(4) Remove left instrument panel air manifold (8) from mounting plate (16).

NOTE

Note location and position of 90° elbows, straight fittings, pressure protection valve, nipple, and plugs before removal to ensure proper installation.

(5) Remove four plugs (9) from left instrument panel air manifold (8).

(6) Remove two 90° elbows (10 and 11) from left instrument panel air manifold (8).

(7) Remove two straight fittings (12 and 13) from left instrument panel air manifold (8).

(8) Remove pressure protection valve (14) from nipple (15).

(9) Remove nipple (15) from left instrument panel air manifold (8).

b. Right Instrument Panel Air Manifold

WARNING

Air lines under pressure will move violently when removed. To prevent personal injury, drain all air pressure from system before removing pressurized components.

NOTE

Tag all air lines before removal to ensure proper installation.

Tag right instrument panel air manifold to ensure proper installation.

(1) Remove two air lines (17 and 18, Figure 2-65, Sheet 2 of 2) from 90° elbows (30 and 31) respectively.

(2) Remove two air lines (19 and 20) from straight fittings (25 and 29) respectively.

(3) Remove two air lines (21 and 22) from 45° elbows (26 and 27) respectively.

(4) Remove two capscrews (28) from right instrument panel air manifold (23).

(5) Remove right instrument panel air manifold (23) from mounting plate (32).

NOTE

Note location and position of 90° elbows, straight fittings, 45° elbows, and plugs before removal to ensure proper installation.

(6) Remove two 90° elbows (30 and 31) from right instrument panel air manifold (23).

(7) Remove two straight fittings (25 and 29) from right instrument panel air manifold (23).

(8) Remove two 45° elbows (26 and 27) from right instrument panel air manifold (23).

(9) Remove two plugs (24) from right instrument panel air manifold (23).

2-52. MAIN AIR MANIFOLD

WARNING

Air lines under pressure will move violently when removed. To prevent personal injury, drain all pressure from system before removing pressurized components.

NOTE

Tag all air lines before removal to ensure proper installation.

a. Remove eight air lines (1 through 8, Figure 2-66) and two air lines (10 and 11) from top and bottom edges of main air manifold (9) respectively.

b. Remove four capscrews (12) and lockwashers (13) from main air manifold (9) and lift main air manifold (9) so air lines (14 through 23) can be removed. Discard lockwashers (13).

NOTE

Perform steps b.1 and b.2 on LVSA1 series vehicles only.

b.1. Remove nut (12.1), lockwasher (12.2), capscrews (12.3) washer (13.1), and clamp (13.2).

b.2. Remove three nuts (12.1) and lockwashers (12.2), and capscrews (12.3) from main air manifold (9) and lift main air manifold (9) so air lines (14 through 23) can be removed. Discard lockwashers (13).

c. Remove air lines (14 through 23) from underside of main air manifold (9).

d. Remove main air manifold (9) from cab.

e. Remove all fittings from main air manifold (9) if necessary. Note location and position of fittings before removal to ensure proper installation.

2-53. HEADLIGHT ASSEMBLY

WARNING

To prevent personal injury, disconnect batteries. Do not wear watches, rings, and other jewelry when working on electrical components.

NOTE

For this procedure, four locknuts (3, Figure 2-67), washers (2), capscrews (1), headlight guard (4), screws (12 and 14), shields (13 and 15), capscrew (32), and locknut (33) were previously removed. Refer to Paragraph 2-5.

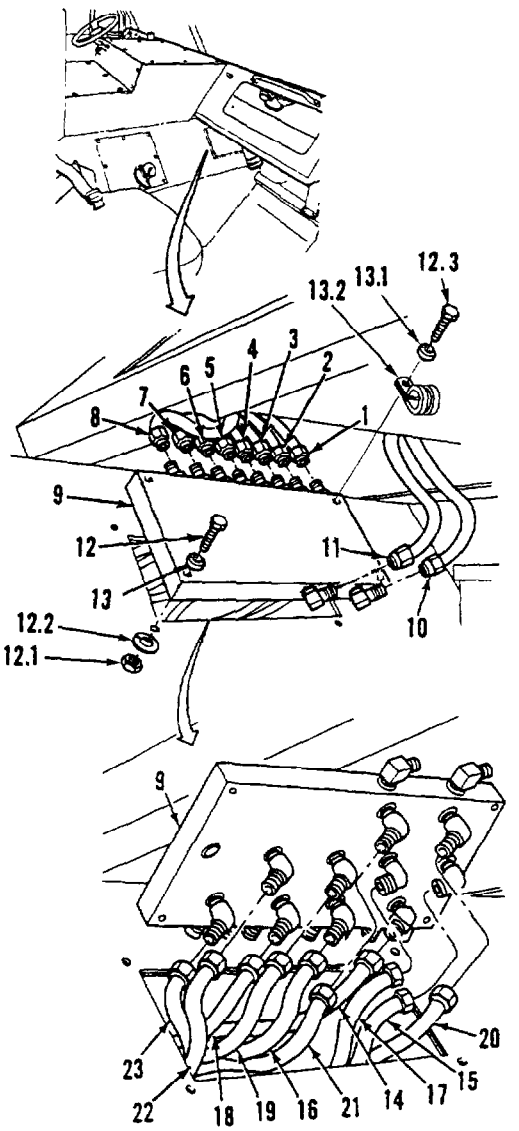

1. Air Line (No. 662)
2. Air Line (No. 665)
3. Air Line (No. 663)
4. Air Line (No. 611)
5. Air Line (No. 612)
6. Air Line (No. 623)
7. Air Line (No. 706)
8. Air Line (No. 069)
9. Main Air Manifold
10. Air Line (No. 415)
11. Air Line (No. 416)
12. Capscrew (4)
12.1. Nut (4)*
12.2. Lockwasher (4)*
12.3. Capscrew (4)*
13. Lockwasher (4)
13.1. Washer*
13.2. Clamp*
14. Air Line (No. 706)
15. Air Line (No. 069)
16. Air Line (No. 612)
17 Air Line (No. 623)
18. Air Line (No. 663)
19. Air Line (No. 611)
20. Air Line (No. 416)
21. Air Line (No. 415)
22. Air Line (No. 665)
23. Air Line (No. 662)

*LVSA1 Series Vehicles Only

Figure 2-66. Main Air Manifold

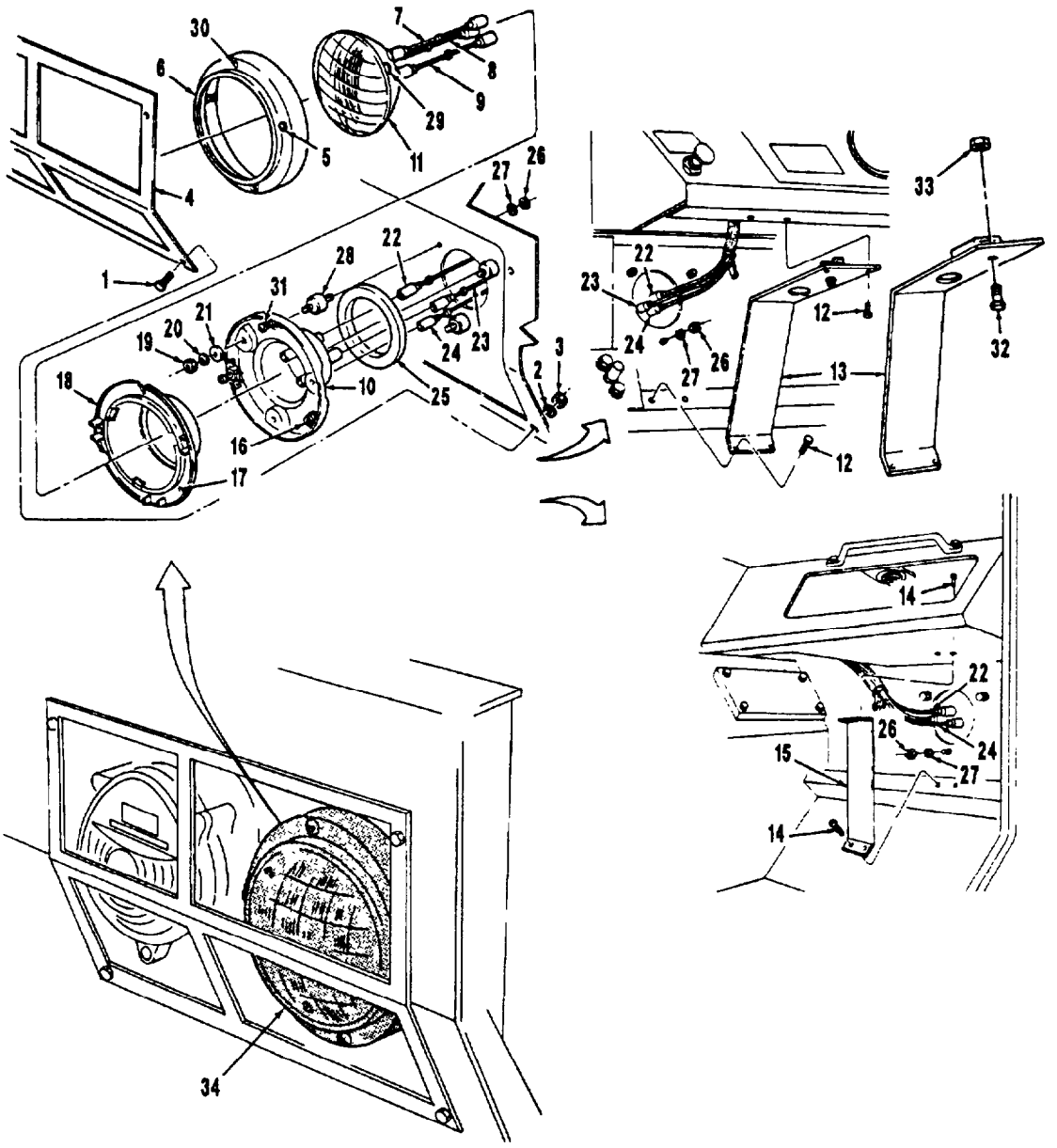

1. Capscrew (4)
2. Washer (4)
3. Locknut (4)
4. Headlight Guard
5. Screw (3)
6. Bezel Ring
7. Wire (No. 017)
8. Wire (No. 018)
9. Wire (No. 091)
10. Headlight Housing
11. Headlight
12. Screw (4)
13. Shield
14. Screw (4)
15. Shield
16. Spring
17. Retaining Hole
18. Adjusting Ring
19. Nut (3)
20. Lockwasher (3)
21. Washer (3)
22. Harness Wire (No. 007)
23. Harness Wire (No. 006)
24. Harness Wire (No. 091)
25. Gasket
26. Nut (3)
27. Lockwasher (3)
28. Rubber Mount (3)
29. Alignment Lug (3)
30. Adjustment Screw Hole (2)
31. Adjustment Screw (2)
32. Capscrew
33. Locknut
34. Headlight Assembly

Figure 2-67. Headlight Assembly

NOTE

Tag all wires before removal to ensure proper installation.

This procedure works for both headlight assemblies.

a. Unplug harness wires (22, 23, and 24) from headlight housing (10).

b. Remove three nuts (26) and lockwashers (27) from rubber mounts (28). Discard lockwashers (27).

c. Remove headlight assembly (34) from vehicle.

d. Remove gasket (25) from headlight assembly (34). Discard gasket (25).

2-54. COMPOSITE LIGHTS

WARNING

To prevent personal injury, disconnect batteries. Do not wear watches, rings, and other jewelry when working on electrical components.

NOTE

Tag all wires before removal to ensure proper installation.

This procedure works for both composite light assemblies.

For this procedure, four locknuts (1, Figure 2-68), washers (2), capscrews (3), and headlight guard (4) were previously removed.

a. Remove three wires (12, 13, and 14) at plugs (15).

b. Remove two capscrews (16) and star washers (17) from composite light body (11). Discard star washers (17).

c. Remove composite light body (11) from vehicle.

2-55. CLEARANCE LIGHT MOUNTING BRACKET AND CLEARANCE LIGHTS

WARNING

To prevent personal injury, disconnect batteries. Do not wear watches, rings, and other jewelry when working on electrical components.

NOTE

Tag all wires before removal to ensure proper installation.

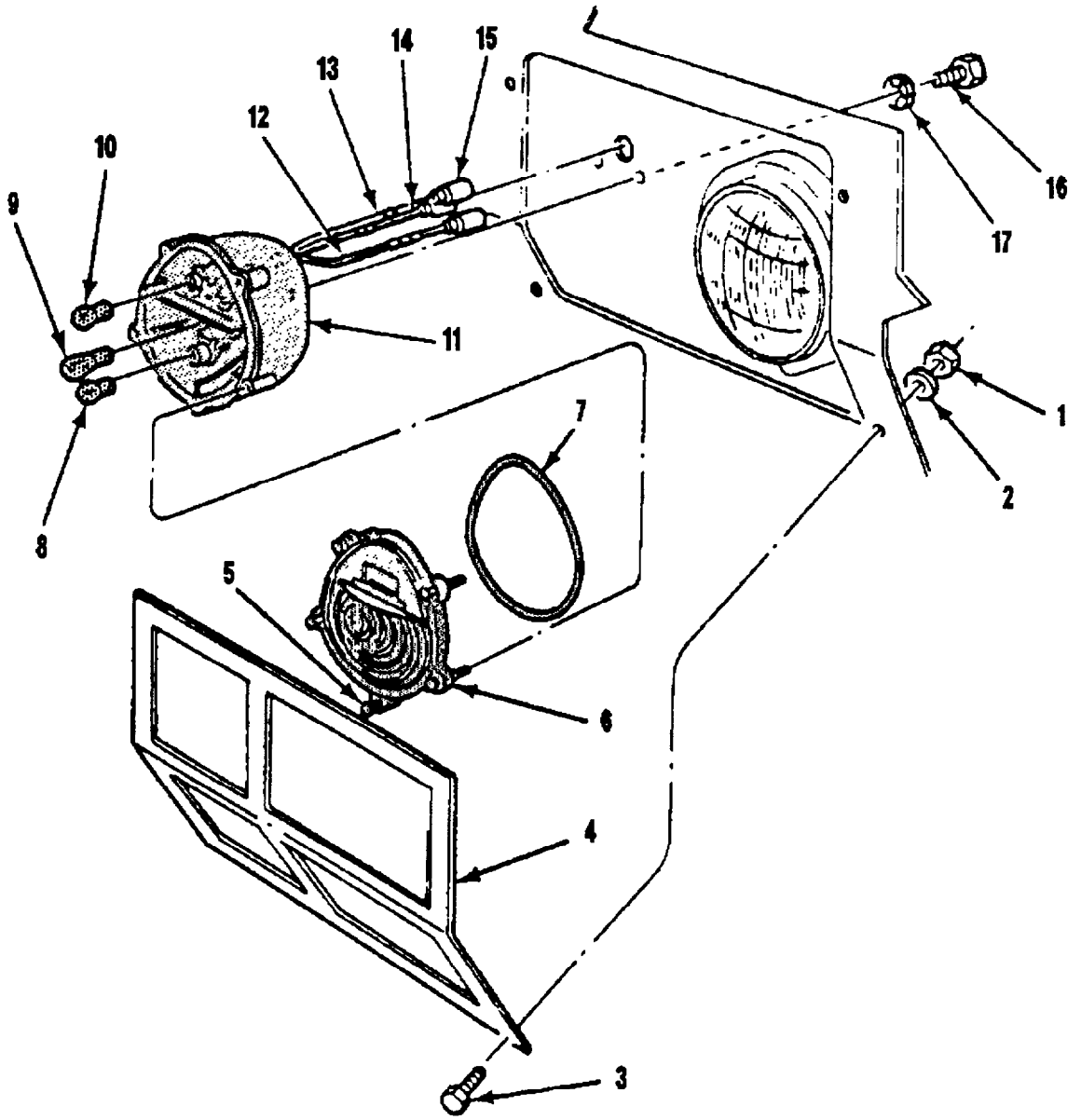

1. Locknut (4)
2. Washer (4)
3. Capscrew (4)
4. Headlight Guard
5. Screw (5)
6. Light Door
7. Gasket
8. Parking Lamp
9. Signal Lamp
10. Blackout Marker Lamp
11. Composite Light Body
12. Wire (No. 491)
13. Wire (No. 460/461)
14. Wire (No. 020)
15. Plug (3)
16. Capscrew (2)
17. Star Washer (2)

Figure 2-68. Composite Lights

a. Clearance Light Mounting Bracket

(1) Remove six screws (2, Figure 2-69) and star washers (3) while holding clearance light mounting bracket (1). Discard star washers (3).

(2) Unplug connector (4) and remove clearance light mounting bracket (1) from vehicle.

b. Clearance Lights

WARNING

To prevent personal injury, disconnect batteries. Do not wear watches, rings, and other jewelry when working on electrical components.

NOTE

Tag all wires before removal to ensure proper installation.

This procedure works for all clearance lights.

(1) Disconnect wire (5) at plug (6).

(2) Remove two screws (7) and lens housing (8) from base (17).

(3) Remove two push-on retainers (9) and lens (10) from lens housing (8). Discard push-on retainers (9).

(4) Remove bulb (11) from socket (12).

(5) Remove screw (13) and socket (12).

NOTE

Some bases (17) are secured with only two screws (14), washers (15), and nuts (16).

(6) Remove four locknuts (16), washers (15), and screws (14) from base (17). Discard locknuts (16).

(7) Remove base (17) and gasket (18) from mounting bracket (1).

2-56. REFLECTORS

NOTE

This procedure works for all reflectors.

a. Remove two self-tapping screws (1, Figure 2-70) from reflector (2). Discard self-tapping screws (1).

b. Remove reflector (2) from side of cab (3).

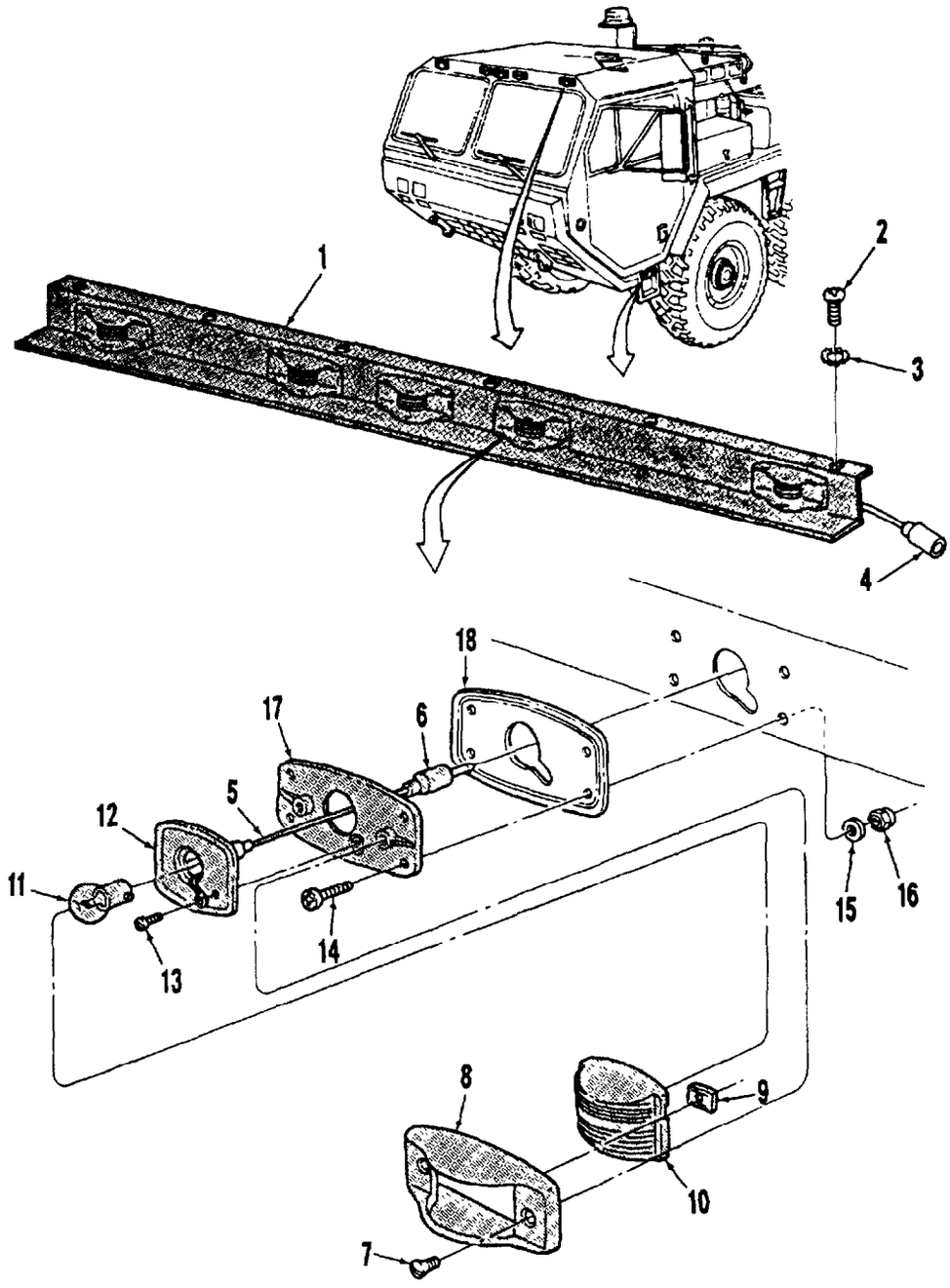

1. Clearance Light Mtg Brkt
2. Screw (6)
3. Star Washer (6)
4. Connector
5. Wire
6. Plug
7. Screw (2)
8. Lens Housing
9. Push-On Retainer (2)
10. Lens
11. Bulb
12. Socket
13. Screw
14. Screw (4)
15. Washer (4)
16. Locknut (4)
17. Base
18. Gasket

Figure 2-69. Clearance Light Mounting Bracket and Clearance Lights

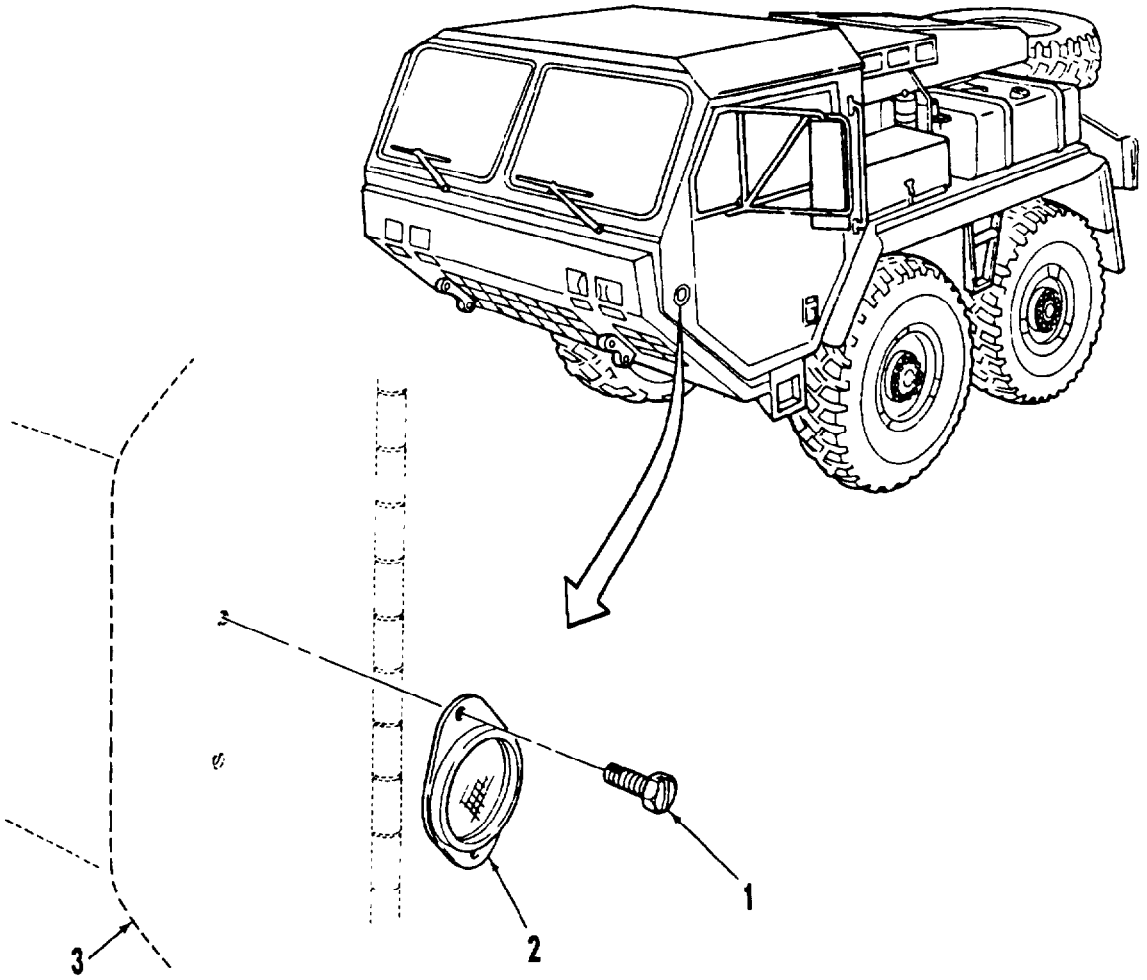

1. Self-Tapping Screw (2)
2. Reflector (2)
3. Side of Cab

Figure 2-70. Reflectors

2-57. CAB STEPS

NOTE

For this procedure, clearance lights were previously removed from cab steps. Refer to paragraph 2-55.

This procedure works for both cab steps.

Perform steps a through e on LVSA1 series vehicles only.

a. Remove locknut (1, Figure 2-71), capscrew (2), five washers (3), and chain (4) from cab stop (5). Discard locknut (1).

b. Remove rapid link (6) and chain (4) from lower step (7).

c. Remove locknut (8), capscrew (9), washer (10), spacer (11) and lower step (7) from step link (12). Discard locknut (8).

d. Remove locknut (13), capscrew (14), washer (15), spacer (16) and step link (12) from step support (17). Discard locknut (13).

e. Remove three locknuts (18), capscrews (19), and step support (17) from cab step (5). Discard locknuts (18).

f. Remove four capscrews (20), lockwashers (21) and washers (22). Discard lockwashers (21).

g. Remove cab step (5).

2-58. TRANSMISSION SHIFT CABLE

NOTE

Perform steps a through g to allow removal of cab. Steps g through p can be performed as necessary prior to removal of the power pack.

a. Place transmission shifter (1, Figure 2-72) in neutral.

b. Remove electrical tape and nylon tie (2) holding wires (3, 4, and 5) to transmission shift cable (6). Discard nylon tie (2).

c. Tag and unplug wires (3, 4, and 5).

d. Remove four capscrews (7) with flat washers (8).

e. Slide rubber boot (9) down and back out of the way.

f. Remove cotter pin (10), washer (11), and cable anchor (12) from shift lever bracket (13). Discard cotter pin (10).

g. Remove two locknuts (14) from two capscrews (15) and remove clamp (16). Discard locknuts (14).

h. Remove cable anchor (12) from transmission shift cable (6).

i. Remove jamnut (17) from transmission shift cable (6).

j. Remove rubber boot (9) from transmission shift cable (6).

k. Remove two capscrews (18), locknuts (19), and clamp (20) at transmission end of transmission shift cable (6). Discard locknuts (19).

l. Remove cotter pin (21) and washer (22) at cable anchor (23) and remove transmission shift cable (6). Discard cotter pin (21).

m. Remove cable anchor (23) and jamnut (17) from shift lever (31).

n. Remove capscrew (24), lockwasher (25), washer (27), and clip (26). Discard lockwasher (25).

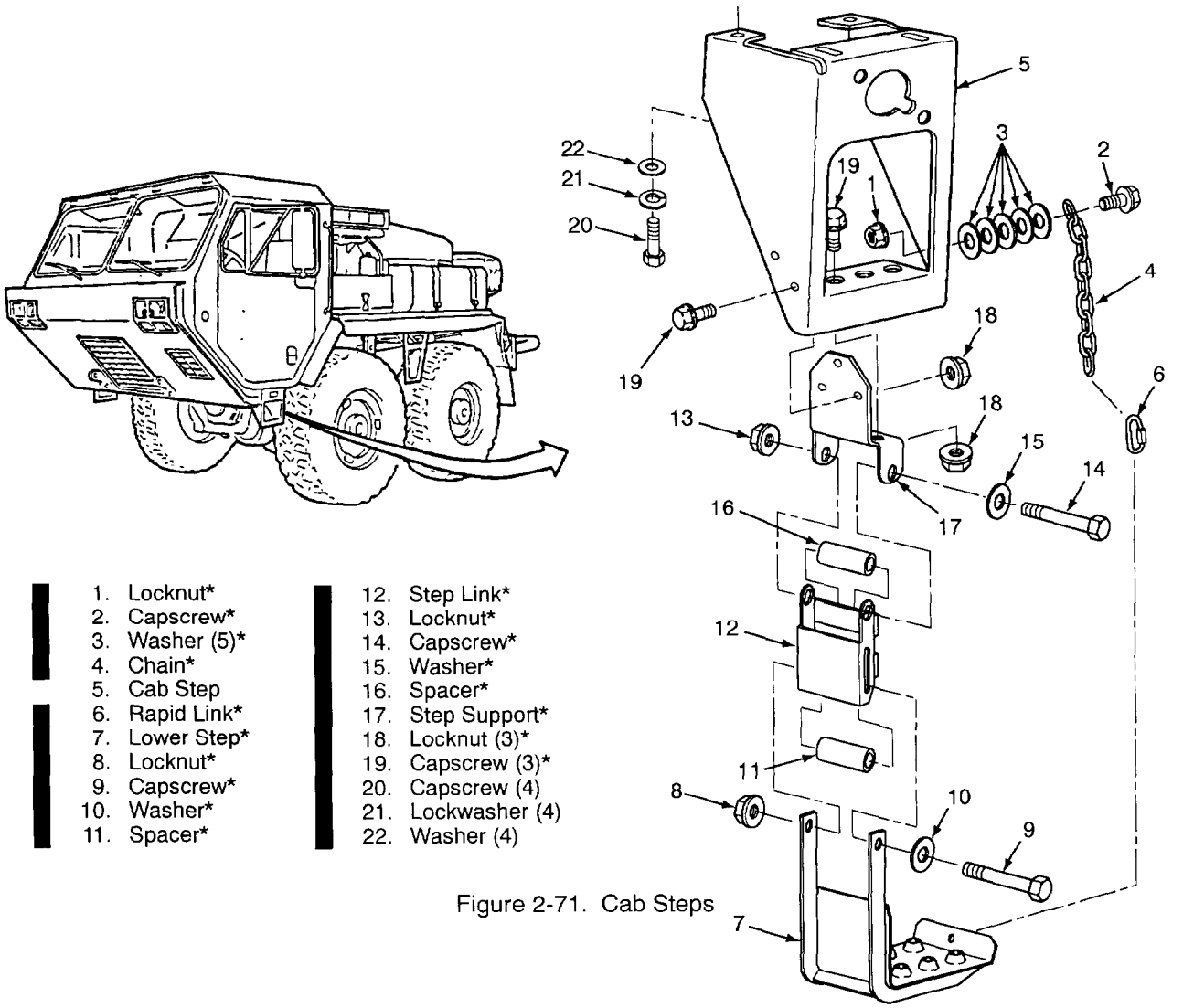

Figure 2-71. Cab Steps

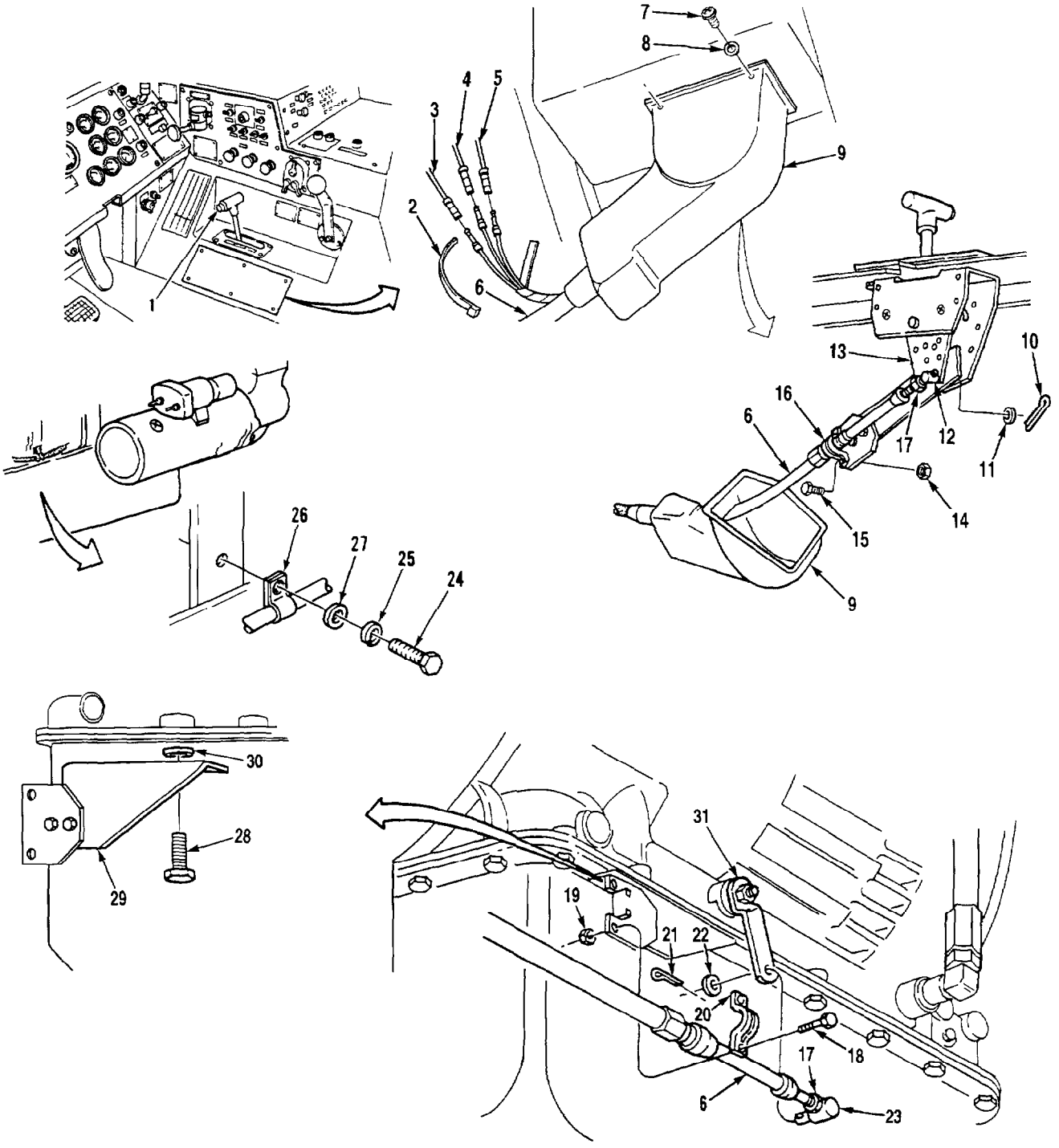

1. Transmission Shifter
2. Nylon Tie
3. Wire (No. 021)
4. Wire (No. 436)
5. Wire (No. 052)
6. Transmission Shift Cable
7. Capscrew (4)
8. Flat Washer (4)
9. Rubber Boot
10. Cotter Pin
11. Washer
12. Cable Anchor
13. Shift Lever Brkt
14. Locknut (2)
15. Capscrew (2)
16. Clamp
17. Jamnut (2)
18. Capscrew
19. Locknut (2)
20. Clamp
21. Cotter Pin
22. Washer
23. Cable Anchor
24. Capscrew
25. Lockwasher
26. Clip
27. Washer
28. Capscrew (2)
29. Bracket
30. Spacer (2)
31. Shift Lever
32. Transmission
33. Engine Block

Figure 2-72. Transmission Shift Cable

o. Cut nylon ties (2) around transmission shift cable (6). Discard nylon ties (2).

p. Remove transmission shift cable (6) from vehicle.

q. Remove two capscrews (28), bracket (29), and spacers (30), if damaged, from transmission (32).

2-59. TRANSFER CASE SHIFT CABLE

NOTE

Perform steps a and b to allow removal of cab. Perform steps c through i as necessary prior to removal of power pack and transfer case.

a. Reach through opening in cab access panel to remove cotter pin (1, Figure 2-73), clevis pin (2), and clevis (3) from rear of shift lever (4). Discard cotter pin (1).

b. Loosen locknut (5) on transfer case shift cable (6) and slide it out of bracket (7).

c. Remove capscrew (8) and clamp (9) from transfer case shift cable (6).

d. Remove nylon tie (10) from transfer case shift cable (6). Discard nylon tie (10).

e. Remove nut (11), lockwasher (12), and capscrew (13) from bracket (14). Discard lockwasher (12).

f. Remove clamp (15) from bracket (14) and transfer case shift cable (6).

g. Remove capscrew (16), spacer (17), and clamp (18) from transmission (26) and transfer case shift cable (6).

h. Remove cotter pin (19), clevis pin (20), and clevis (21) from shift shaft (22) on transfer case (23). Discard cotter pin (19).

i. Loosen locknut (24) and remove transfer case shift cable (6) from bracket (25).

2-60. HEATER CONTROL VALVE CABLE

NOTE

Perform steps a and b to allow removal of cab. Steps c and d can be done after cab is removed.

a. Remove screw (1, Figure 2-74) from clamp (2).

b. Slide heater control valve cable (3) off pin (4).

c. Remove nut (5) and lockwasher (6) from control knob (7).

d. Pull heater control valve cable (3) from mounting hole (8), hole (9), and remove from vehicle. Discard lockwasher (6).

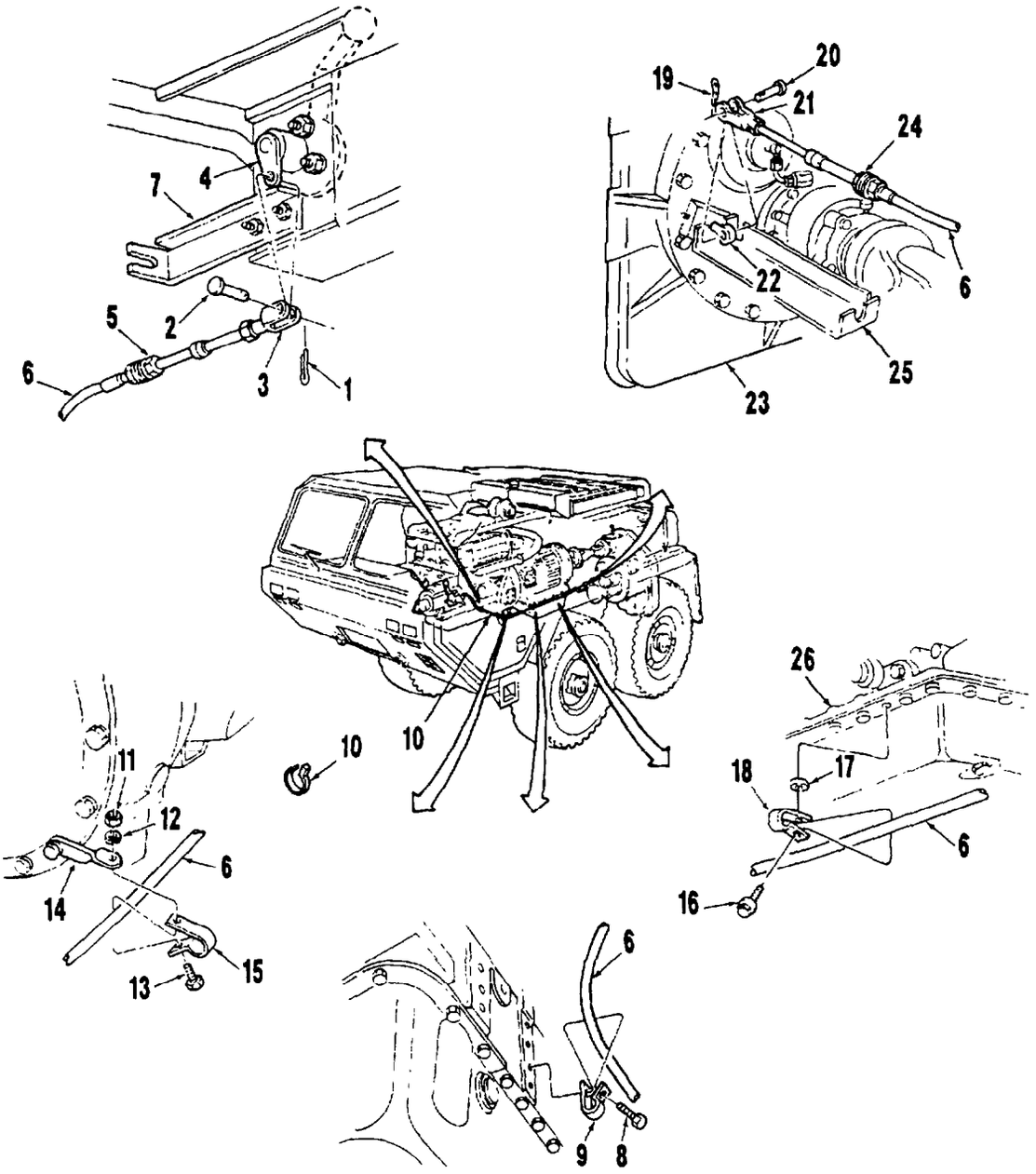

1. Cotter Pin
2. Clevis Pin
3. Clevis
4. Shift Lever
5. Locknut
6. Transfer Case Shift Cable
7. Bracket
8. Capscrew
9. Clamp
10. Nylon Tie
11. Nut
12. Lockwasher
13. Capscrew
14. Bracket
15. Clamp
16. Capscrew
17. Spacer
18. Clamp
19. Cotter Pin
20. Clevis Pin
21. Clevis
22. Shift Shaft
23. Transfer Case
24. Locknut
25. Bracket
26. Transmission

Figure 2-73. Transfer Case Shift Cable

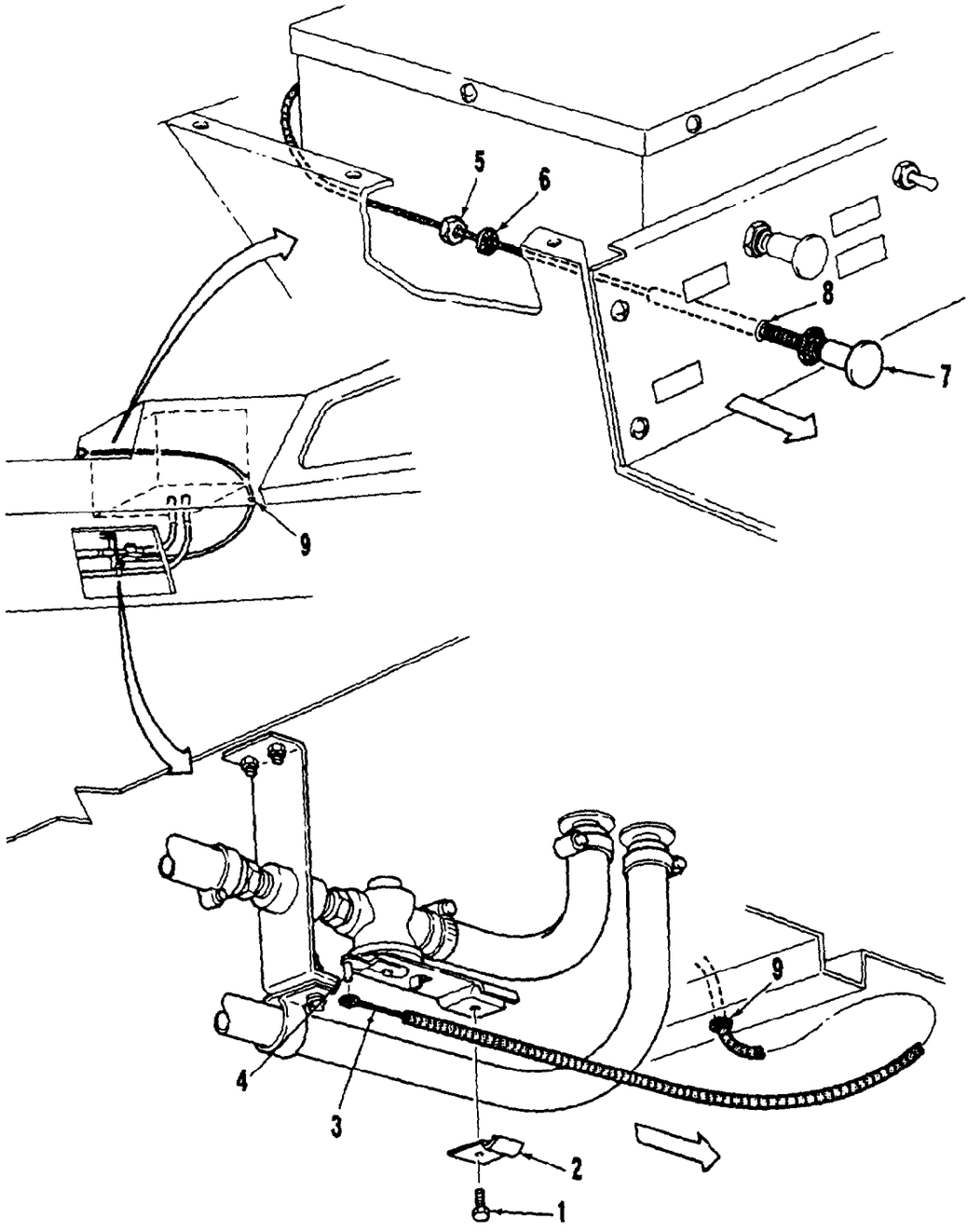

1. Screw
2. Clamp
3. Heater Control Valve Cable
4. Pin
5. Nut
6. Lockwasher
7. Control Knob
8. Mounting Hole
9. Hole

Figure 2-74. Heater Control Valve Cable

2-61. HEATER HOSES AND FITTINGS

NOTE

Note location and position of hoses and fittings to ensure proper installation.

Place a container under heater hoses and fittings to catch any coolant that may spill during removal procedures.

Hose clamps (1) have changed from a worm type clamp to a constant torque "Breeze" type clamp. When repairing a non-A1 vehicle, use the new style constant torque clamp to replace the old style clamp. Refer to TM 9-2320-297-24P for correct part identification.

a. Loosen two hose clamps (1, Figure 2-75).

b. Loosen hose clamp (2) and remove hose (3) from heater control valve (14) and heater core tube (21); remove hose clamps (1 and 2) from hose (3). Discard hose (3).

c. Remove capscrew (4), lockwasher (5), washer (6), nut (7), and clamp (8) from bracket (15). Discard lockwasher (5).

d. Loosen hose clamps (9, 10 and 11) and remove hose (12) from 90° elbow (17) and heater core tube (22); remove clamp (8) and hose clamps (1 and 11) from hose (12). Discard hose (12).

e. Remove hose (13) from fitting (19) and nipple fitting (16); remove hose clamps (9 and 10) from hose (13). Discard hose (13).

f. Remove heater control valve (14) from nipple fitting (16).

g. Remove two fittings (16) from bracket (15).

h. Remove 90° elbow (17) from reducer bushing (18) if necessary.

i. Remove fitting (19) from reducer bushing (20) if necessary.

2-62. CAB

NOTE

Remove nylon ties as needed to remove air lines and electrical wiring. Tag all air lines and electrical wiring to ensure proper installation.

a. Remove clamping capscrew (1, Figure 2-76, Sheet 1 of 2) and nut (2) from steering shaft and yoke (3).

b. Slide steering shaft end yoke (3) off shaft (4) and away from 90° gear box (5). Keep woodruff key (6) with shaft (4).

c. Secure steering shaft end yoke (3) out of the way so cab can be removed.

d. Remove four air lines (7) from 90° elbows (7A).

e. Remove eight capscrews (8) from diagnostic connector access (DCA) cover (9).

f. Pull DCA cover (9) out and away from cab console.

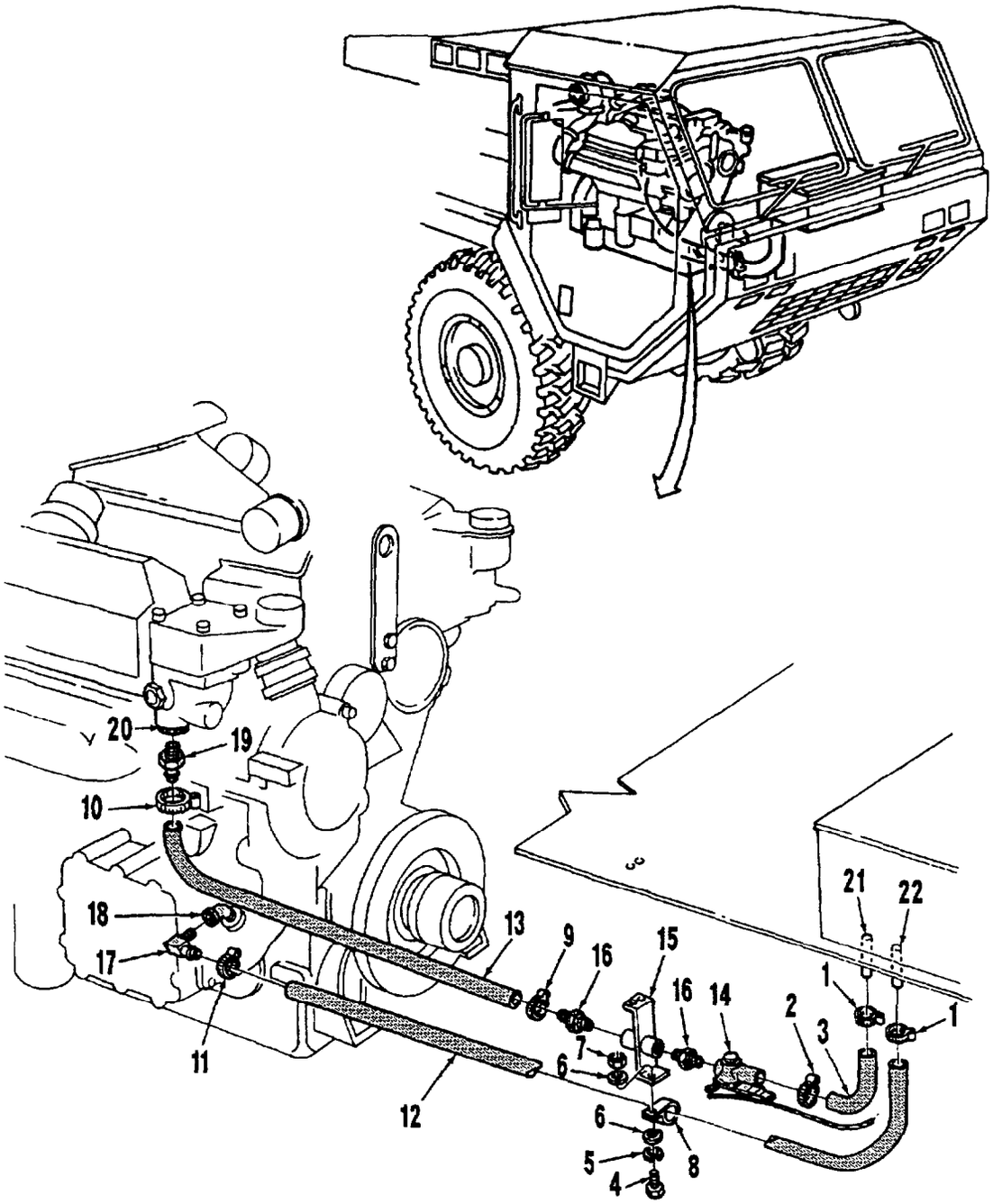

1. Hose Clamp (2)
2. Hose Clamp
3. Hose
4. Capscrew
5. Lockwasher
6. Washer
7. Nut
8. Clamp
9. Hose Clamp
10. Hose Clamp
11. Hose Clamp
12. Hose
13. Hose
14. Heater Control Valve
15. Bracket
16. Nipple Fitting
17. 90° Elbow
18. Reducer Bushing
19. Fitting
20. Reducer Bushing
21. Heater Core Tube
22. Heater Core Tube

Figure 2-75. Heater Hoses and Fittings

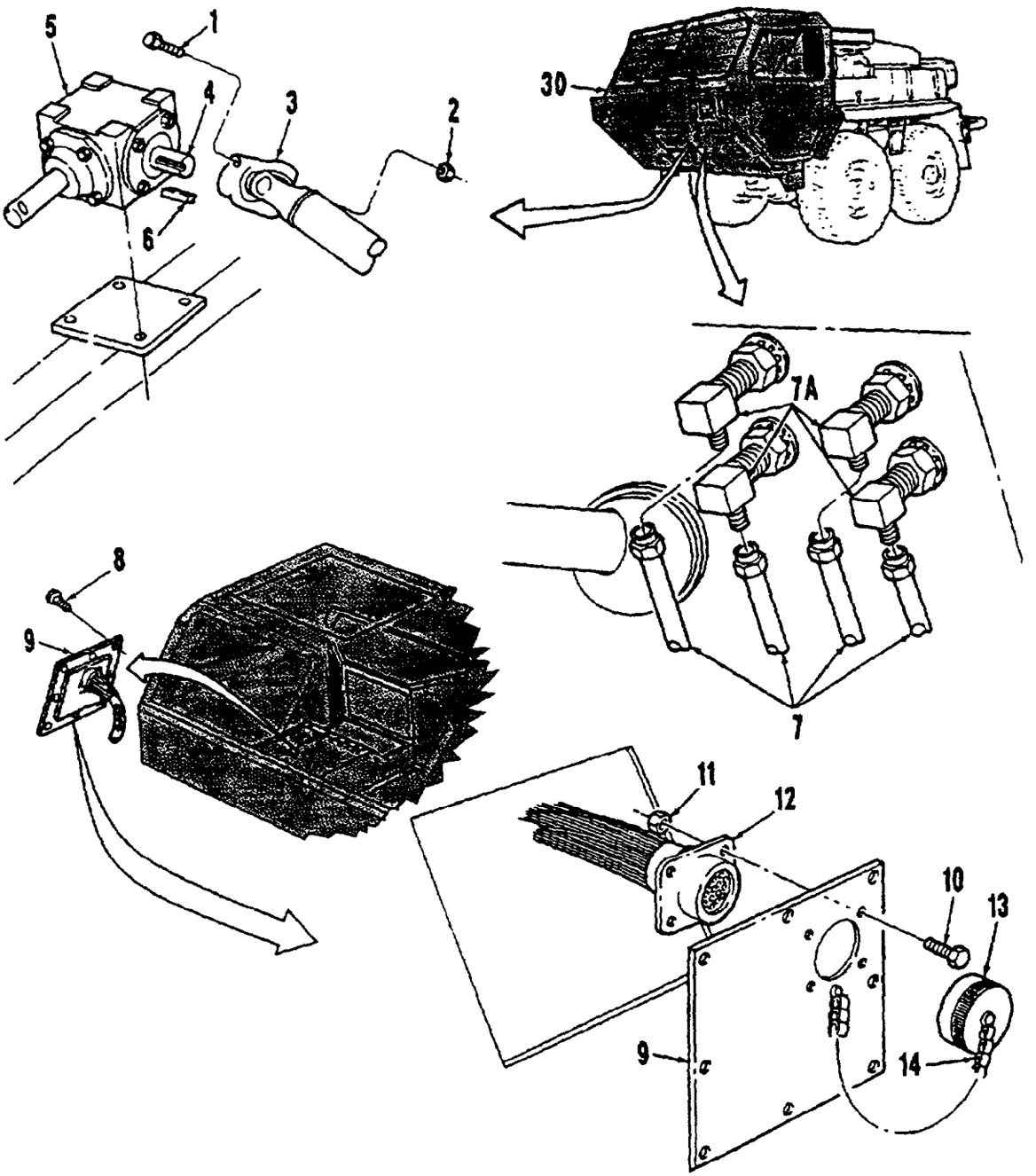

1. Clamping Capscrew
2. Nut
3. Steering Shaft End Yoke
4. Shaft
5. Frame 90° Gear Box
6. Woodruff Key
7. Air Line (4)
7A. 90° Elbow (4)
8. Capscrew (8)
9. DCA Cover
10. Capscrew (4)
11. Locknut (4)
12. DCA Connector
13. DCA Connector Cap
14. Chain

Figure 2-76. Cab (Sheet 1 of 2)

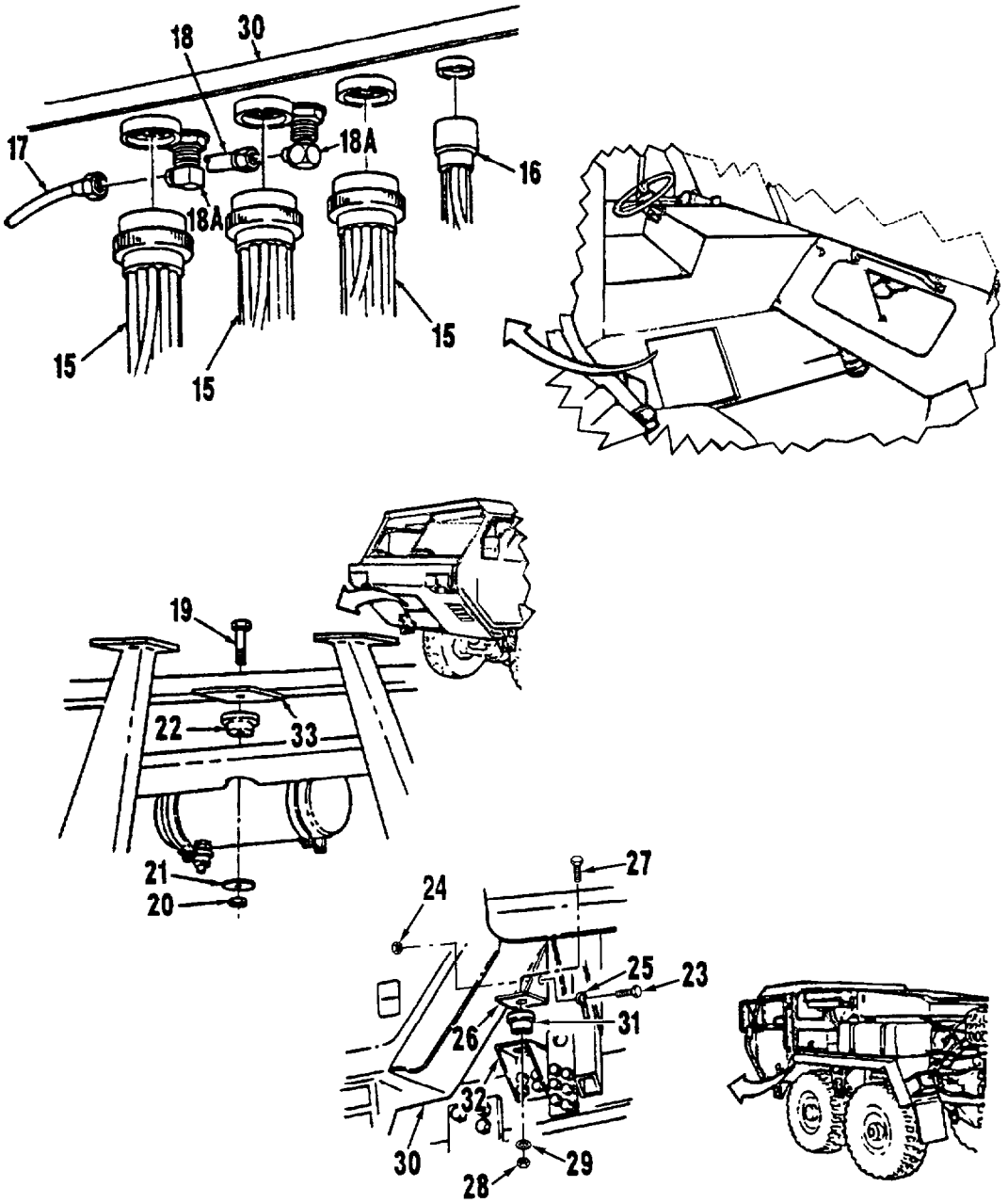

15. Electrical Connector (3)
16. Electrical Connector
17. Air Line
18. Air Line
18A. 90° Elbow (2)
19. Capscrew
20. Nut
21. Washer
22. Rubber Biscuit
23. Capscrew
■ 24. Nut
25. Ground Wire
26. Mounting Bracket
27. Capscrew (2)
28 Nut (2)
29 Washer (2)
30 Cab
31 Rubber Biscuit (2)
32. Cab Side Support (2)
33. Cab Front Support

Figure 2-76. Cab (Sheet 2 of 2)

g. Remove DCA connector cap (13) from DCA connector (12).

h. Remove four capscrews (10), locknuts (11), and chain (14) from DCA cover (9) and DCA connector (12). Discard locknuts (11).

i. Remove DCA connector (12) from DCA cover (9).

j. Remove three electrical connectors (15, Figure 2-76, Sheet 2 of 2) from cab (30).

k. Unplug electrical connector (16) from cab (30).

l. Remove two air lines (17 and 18) from 90° elbows (18A) and cab (30).

m. Remove capscrew (19), nut (20), washer (21), and rubber biscuit (22) from cab front support (33).

n. Attach suitable lifting device to cab (30) so it will be balanced when being lifted.

NOTE

Mounting hardware for LVSA1 grounding strap has changed from nut, lockwasher, washer, and capscrew to a flanged locknut and capscrew. When repairing a non-A1 vehicle, use the new style mounting hardware to replace the old style hardware. Refer to TM 9-2320-297-24P for correct mounting hardware.

o. Remove nut (24), capscrew (23), and ground wire (25) from cab mounting bracket (26).

p. Remove capscrew (27), nut (28), and washer (29) from each side of cab (30).

WARNING

The cab is very heavy. To prevent personal injury, use proper lifting slings and an overhead lifting device to remove cab.

To prevent personal injury, direct personnel to stand clear of cab during removal procedures.

q. Remove cab (30) from vehicle.

r. Remove two rubber biscuits (31) from cab side supports (32).

2-63. MIRROR ASSEMBLY

NOTE

This procedure works for both mirror assemblies.

a. Remove nut (7, Figure 2-77), lockwasher (8), and washer (9) from bottom of mirror assembly (6) and mirror and bracket assembly (10). Discard lockwasher (8).

b. Remove mirror and bracket assembly (10) from bracket (19).

c. Remove nut (1), lockwasher (2), spacer (3), star washer (4), and capscrew (5) from top of mirror assembly (6). Discard lockwasher (2) and star washer (4).

d. Remove spacer (11), star washer (12), capscrew (13), and mirror assembly (6) from bracket (19). Discard star washer (12).

e. Remove nut (14), two washers (15), capscrew (16), and mirror (17) from bracket (18).

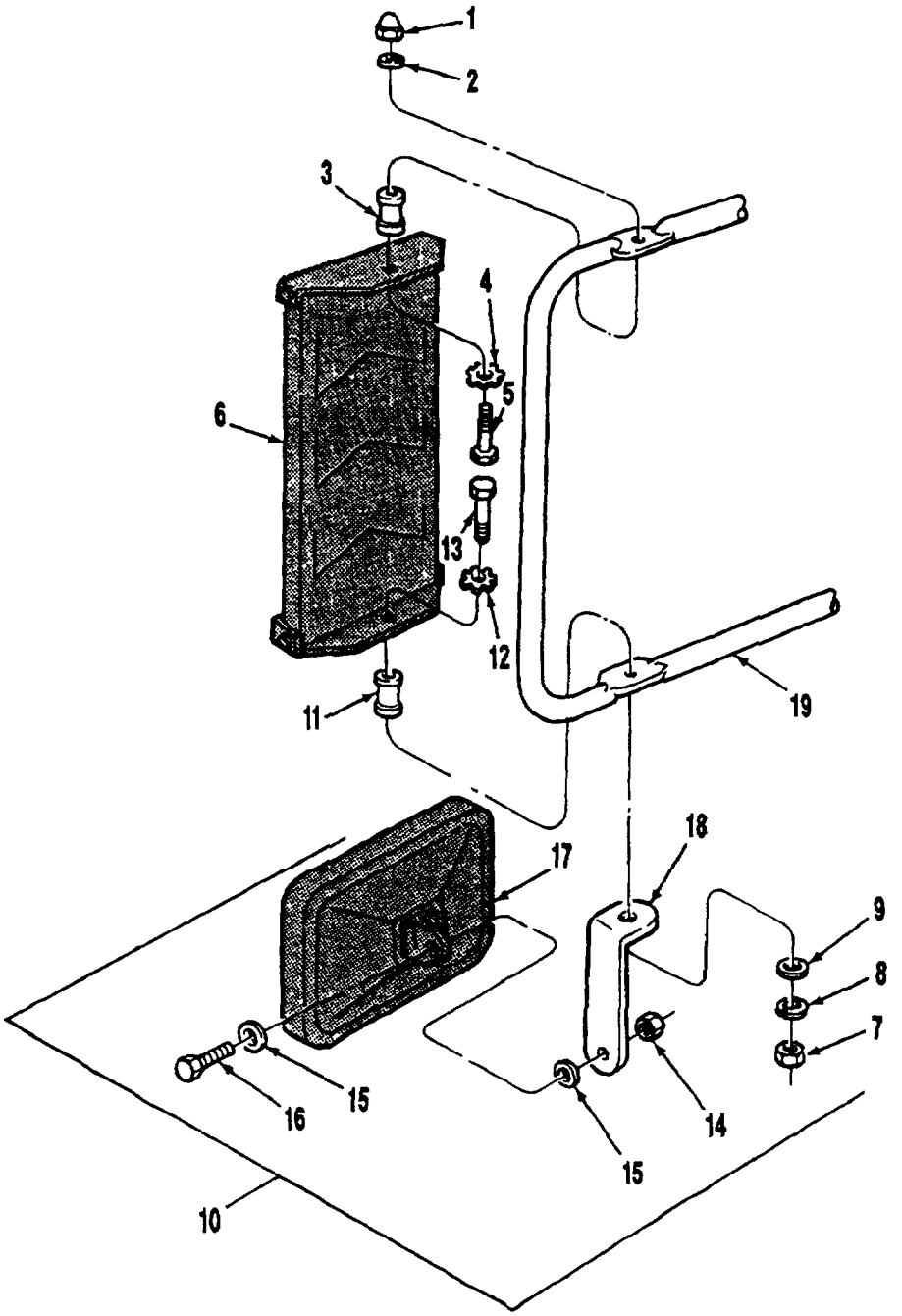

1. Nut
2. Lockwasher
3. Spacer
4. Star Washer
5. Capscrew
6. Mirror Assembly
7. Nut
8. Lockwasher
9. Washer
10. Mirror and Bracket Assembly
11. Spacer
12. Star Washer
13. Capscrew
14. Nut
15. Washer (2)
16. Capscrew
17. Mirror
18. Bracket
19. Bracket

Figure 2-77. Mirror Assembly

2-64. GRAB HANDLES - CAB

NOTE

This procedure works for all grab handles - cab.

Mounting hardware for LVSA1 grab handles has changed from a capscrew, lockwasher, and hex nut to a flanged type capscrew and locknut. When repairing a non-A1 vehicle, use the new style flanged mounting hardware to replace the old style hardware. Refer to TM 9-2320-297-24P for correct parts identification.

a. Remove two locknuts (1, Figure 2-78), defroster duct guard (4), capscrews (5), and grab handle (6) from dash panel (7). Discard locknuts (1).

b. Remove two locknuts (1), capscrews (5), and grab handles (8) from cab (9). Discard locknuts (1).

2-65. RUBBER FENDERS - CAB

NOTE

This procedure works for both rubber fenders - cab.

a. Remove six capscrews (1, Figure 2-79), lockwashers (2), and metal strip (3) from rubber fenders (4). Discard lockwashers (2).

b. Remove rubber fender (4) from cab (5).

2-66. ROOF VENT

a. Remove 12 locknuts (1, Figure 2-80), screws (2) and lockwashers (3) from roof vent (4). Discard locknuts (1) lockwashers (3).

NOTE

Roof vent (4) will stick to cab roof (5). Use a prying tool to break roof vent (4) loose.

b. Pry up and remove roof vent (4) from cab roof (5).

c. Remove and discard gasket (6).

2-67. WINDSHIELD WIPER ARMS AND WIPER BLADES

a. Windshield Wiper Arms

(1) Remove locknut (1, Figure 2-81) and lockwasher (2) from wiper arm drive stud (3). Discard locknut (1) and lockwasher (2).

NOTE

Perform step (1.1) on LVSA1 series vehicles only.

(1.1) Remove acorn nut (1.1) and lockwasher (2.1) from wiper arm drive stud (3). Discard lockwasher (2.1).

(2) Remove hose (4) from connector (5).

(3) Remove windshield wiper arm (6) from wiper arm drive stud (3).

(4) Remove hose (4) from nozzle (10).

b. Wiper Blades

(1) Remove nut (8), screw (7), and nozzle (10) from windshield wiper arm (6).

(2) Remove wiper blade (9) from windshield wiper arm (6).

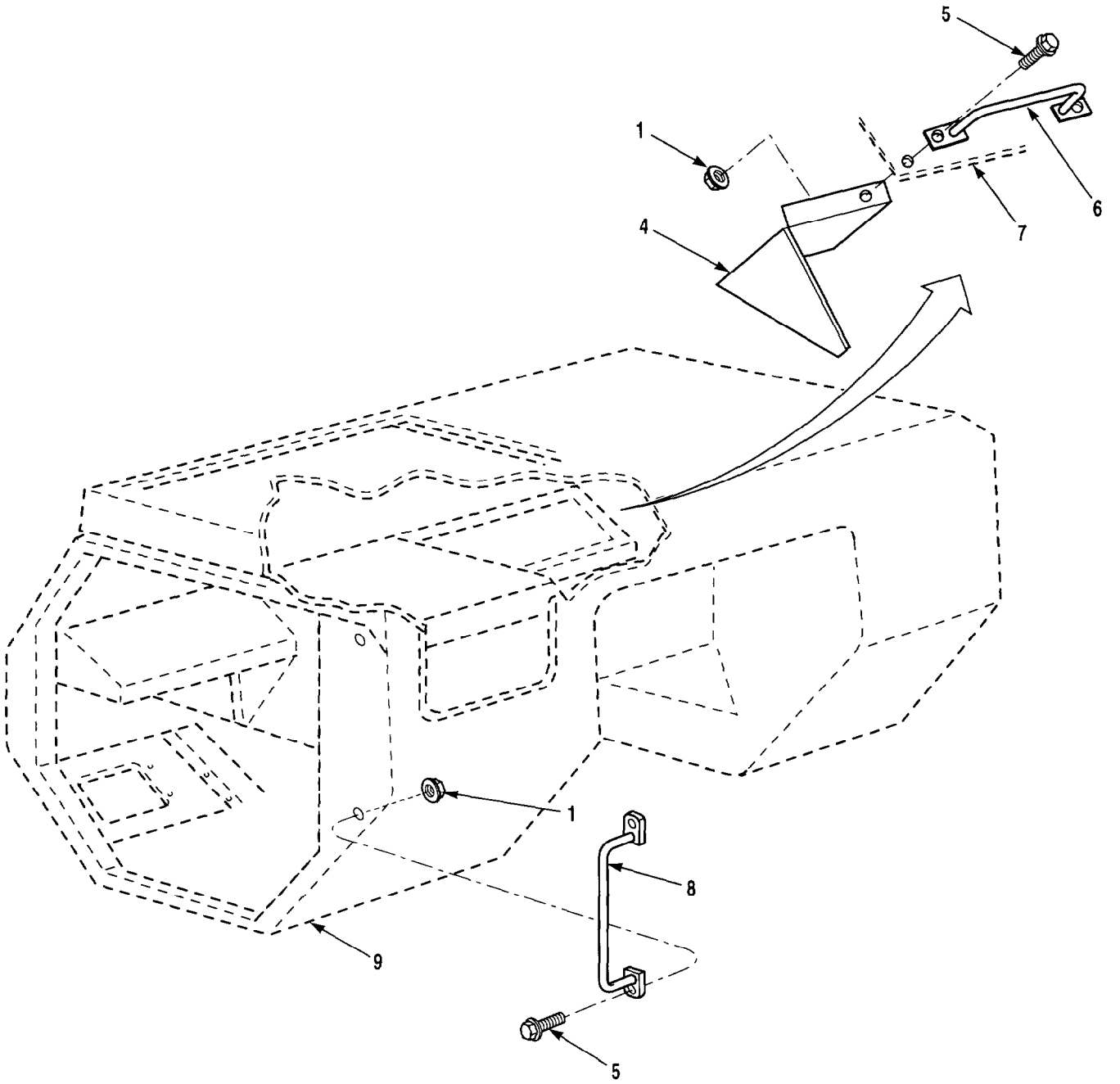

1. Locknut (6)
2. Deleted
3. Deleted
4. Defroster Duct Guard
5. Capscrew (6)
6. Grab Handle
7. Dash Panel
8. Grab Handle (2)
9. Cab

Figure 2-78. Grab Handles - Cab

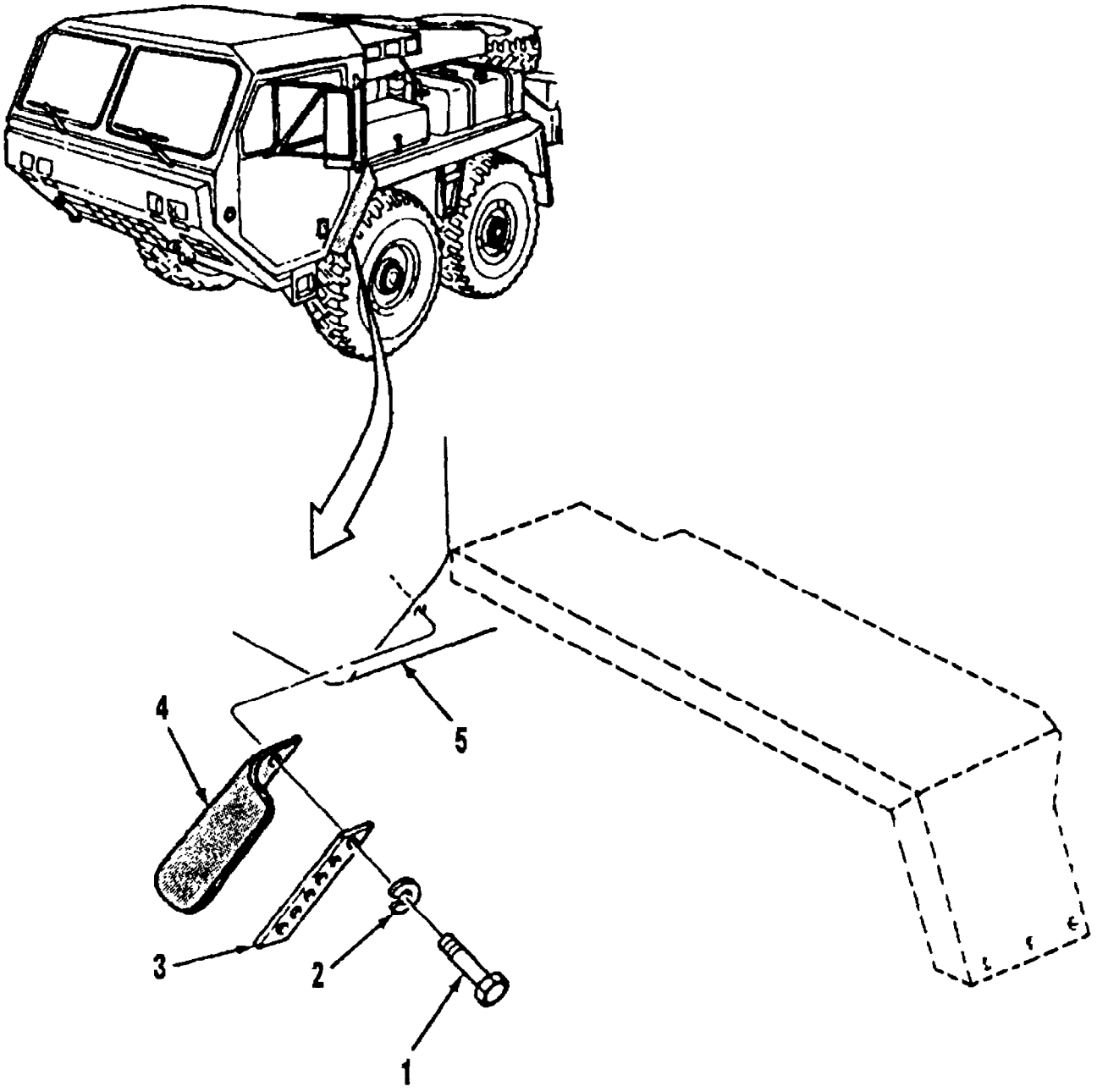

1. Capscrew (6)
2. Lockwasher (6)
3. Metal Strip
4. Rubber Fender
5. Cab

Figure 2-79. Rubber Fenders - Cab

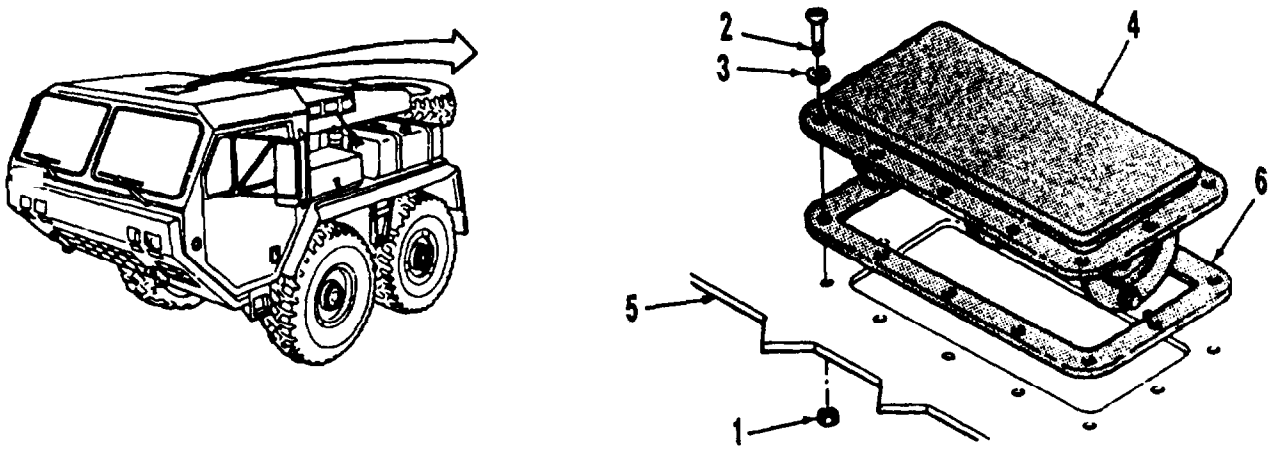

1. Locknut (12)
2. Screw (12)
3. Lockwasher (12)
4. Roof Vent
5. Roof
6. Gasket

Figure 2-80. Roof Vent

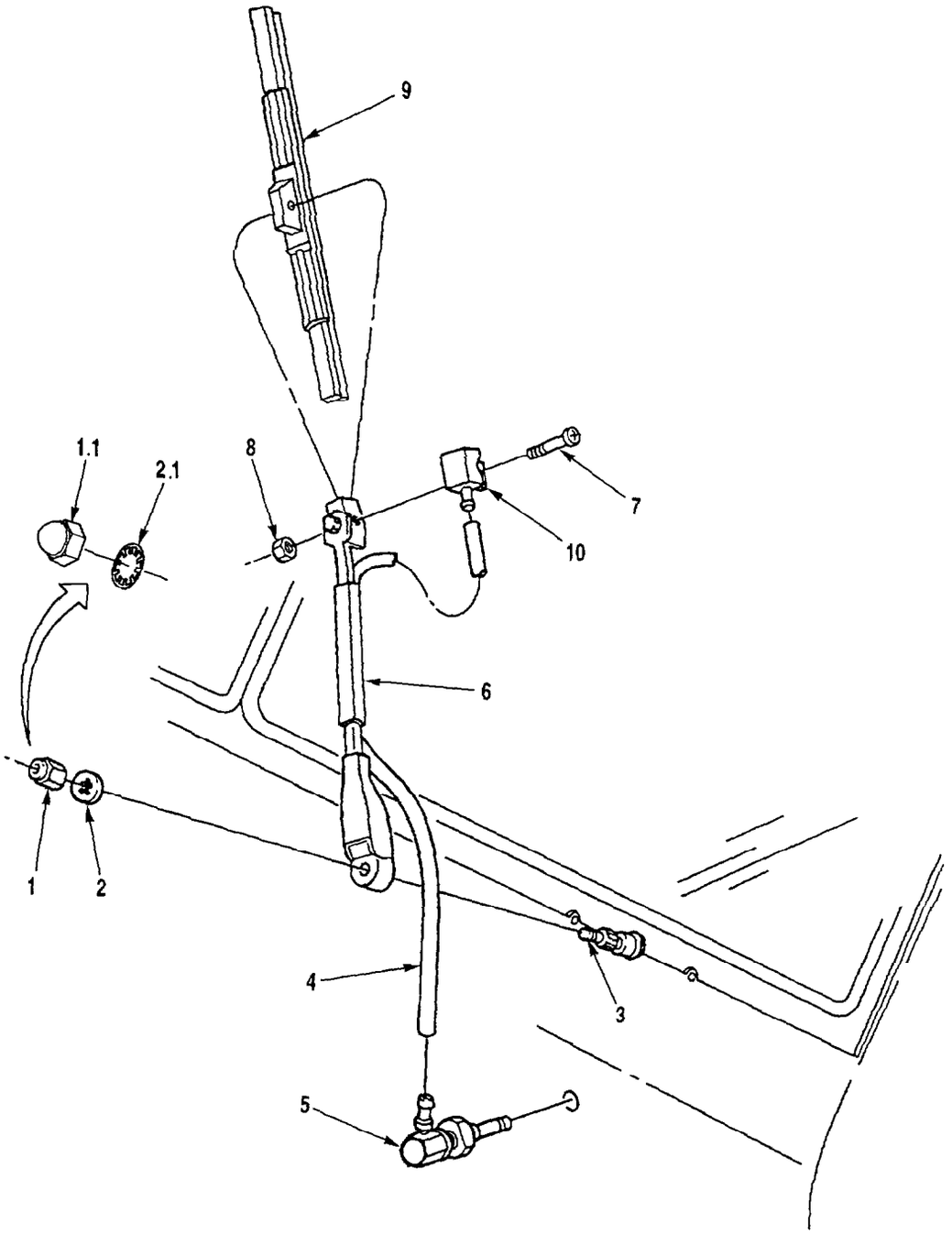

1. Locknut
1.1. Acorn Nut*
2. Lockwasher
2.1. Lockwasher*
3. Wiper Arm Drive Stud
4. Hose
5. Connector
6. Windshield Wiper Arm
7. Screw
8. Nut
9. Wiper Blade
10. Nozzle

* LVSA1 Series Vehicles Only

Figure 2-81. Windshield Wiper Arms and Wiper Blades

2-68. AIR HORNS

a. Remove two capscrews (1, Figure 2-82) and lockwashers (2) from bracket (3). Discard lockwashers (2).

b. Pull air horns (4) through access hole.

c. Remove air line (5) from 90° elbow (6) and remove air horns (4).

NOTE

Note position of 90° elbow before removal to ensure proper installation.

d. Remove 90° elbow (6) from air horns (4).

e. Remove nut (7), lockwasher (8), and washer (9). Discard lockwasher (8).

f. Remove capscrew (10), washer (11), nut (12), and lockwasher (13). Discard lockwasher (13).

g. Remove air horns (4) and gasket (14) from bracket (3). Discard gasket (14).

2-69. ELECTRIC HORNS

NOTE

Tag all wires before removal to ensure proper installation.

a. Remove two wires (1, Figure 2-83) from electric horns (2).

b. Remove capscrew (3), two star washers (4), two wires (5), brackets (7), and electric horns (2) from mounting surface (8). Discard star washers (4).

c. Remove two nuts (6) from electric horns (2) and remove electric horns (2) from brackets (7).

2-70. FRAME 90° GEAR BOX

a. Remove four capscrews (1, Figure 2-84), lockwashers (2), and washers (3) from frame 90° gear box (5). Discard lockwashers (2).

b. Remove frame 90° gear box (5) from mounting plate (4).

2-71. DOOR AND MIRROR BRACKET

NOTE

This procedure works for both doors and mirror brackets.

a. Door

(1) Remove two capscrews (1, Figure 2-85) and lockwashers (2) from door (5) and door strap (3). Discard lockwashers (2).

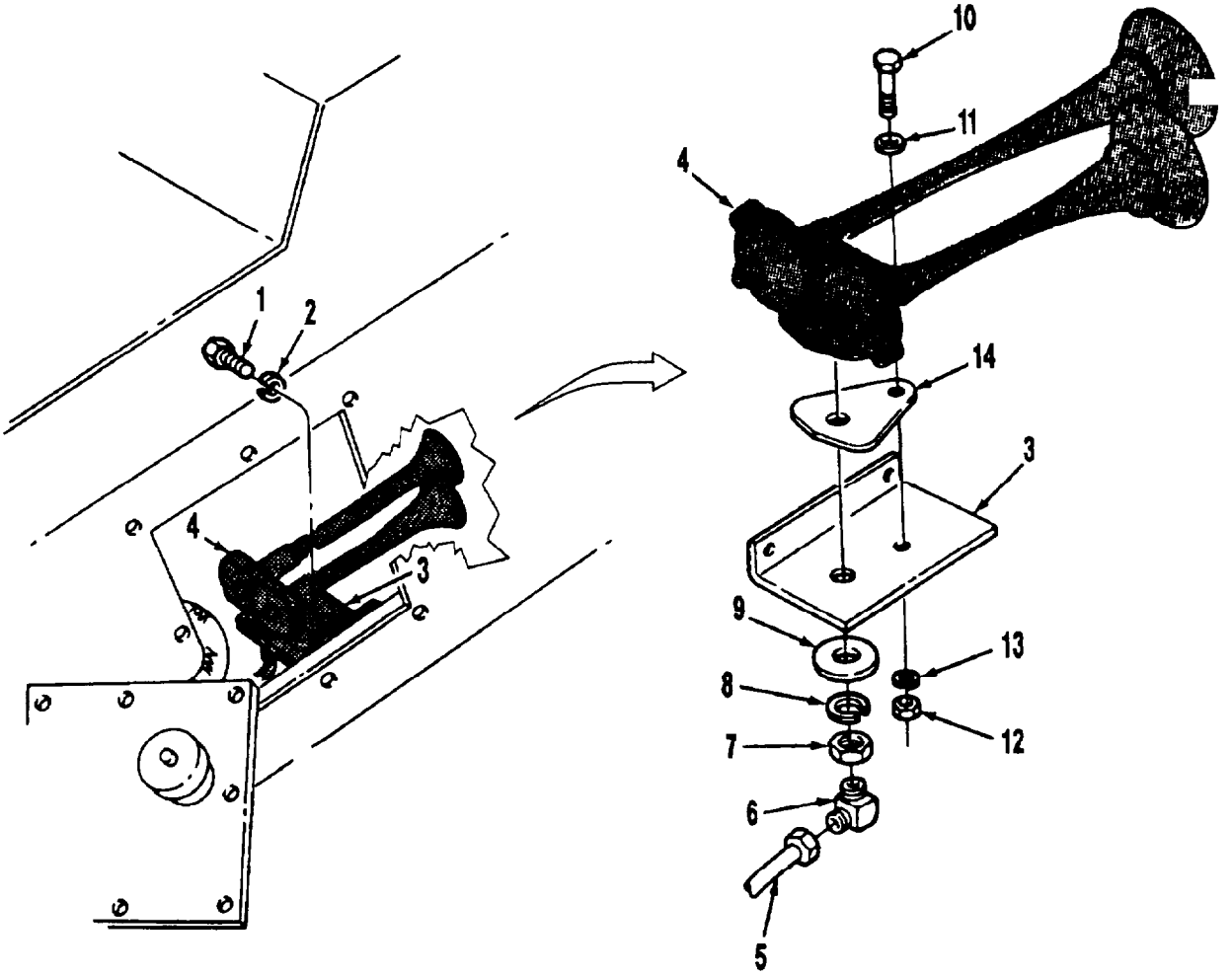

1. Capscrew (2)
2. Lockwasher (2)
3. Bracket
4. Air Horn (2)
5. Air Line
6. 90° Elbow
7. Nut
8. Lockwasher
9. Washer
10. Capscrew
11. Washer
12. Nut
13. Lockwasher
14. Gasket

Figure 2-82. Air Horns

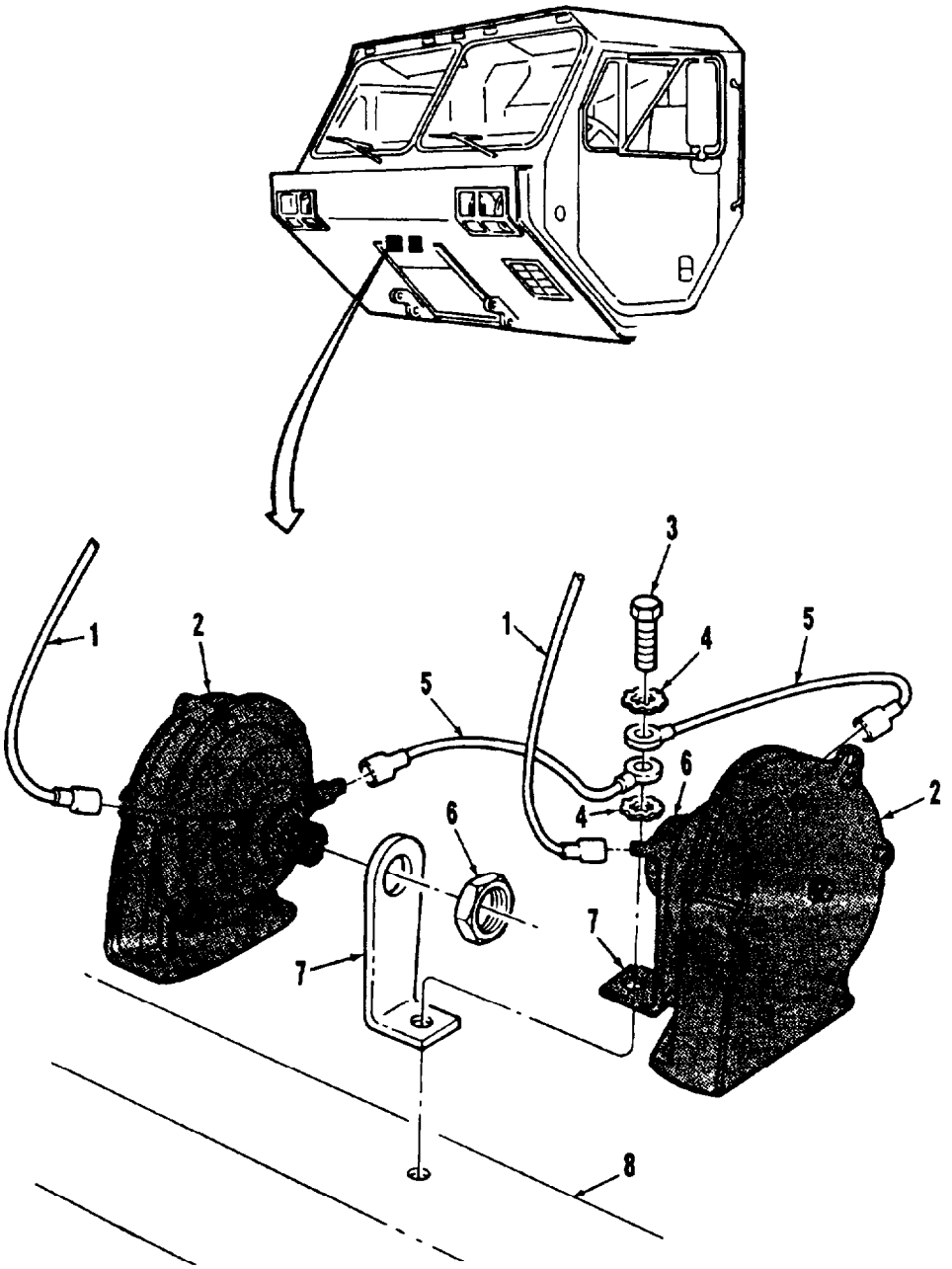

1. Wire
2. Electric Horn (2)
3. Capscrew
4. Star Washer (2)
5. Wire (2)
6. Nut (2)
7. Bracket (2)
8. Mounting Surface

Figure 2-83. Electric Horns

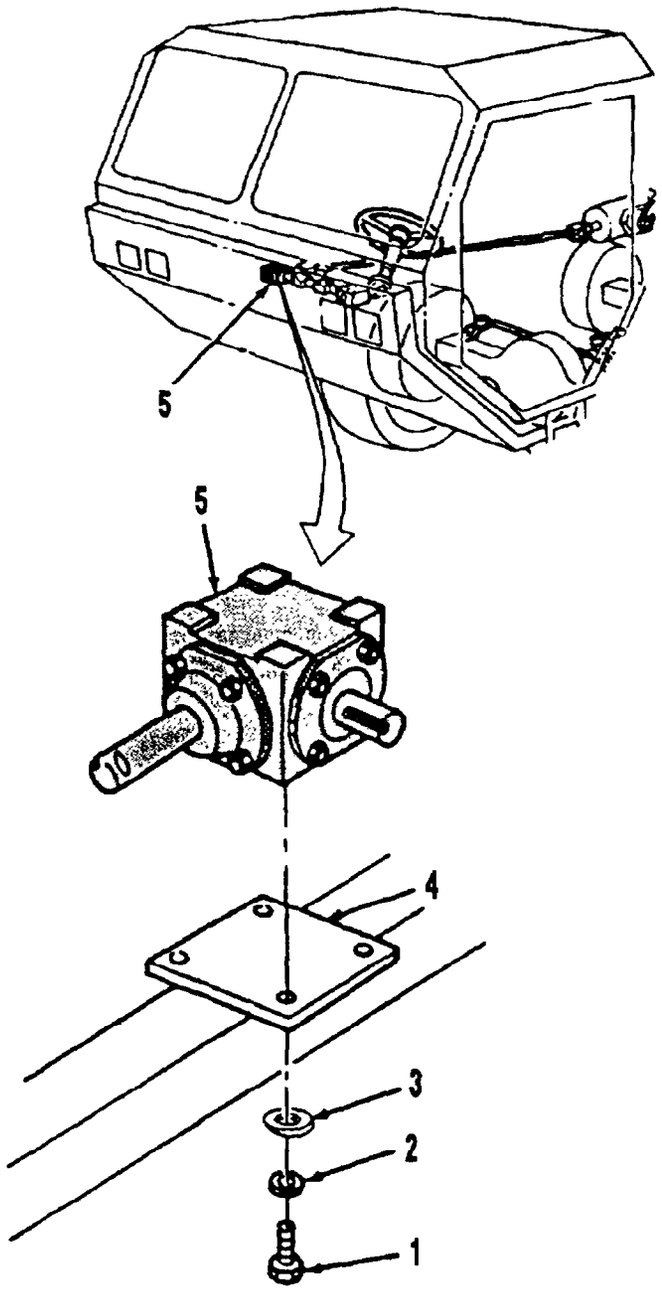

1. Capscrew (4)
2. Lockwasher (4)
3. Washer (4)
4. Mounting Plate
5. Frame 90° Gear Box

Figure 2-84. Frame 90° Gear Box

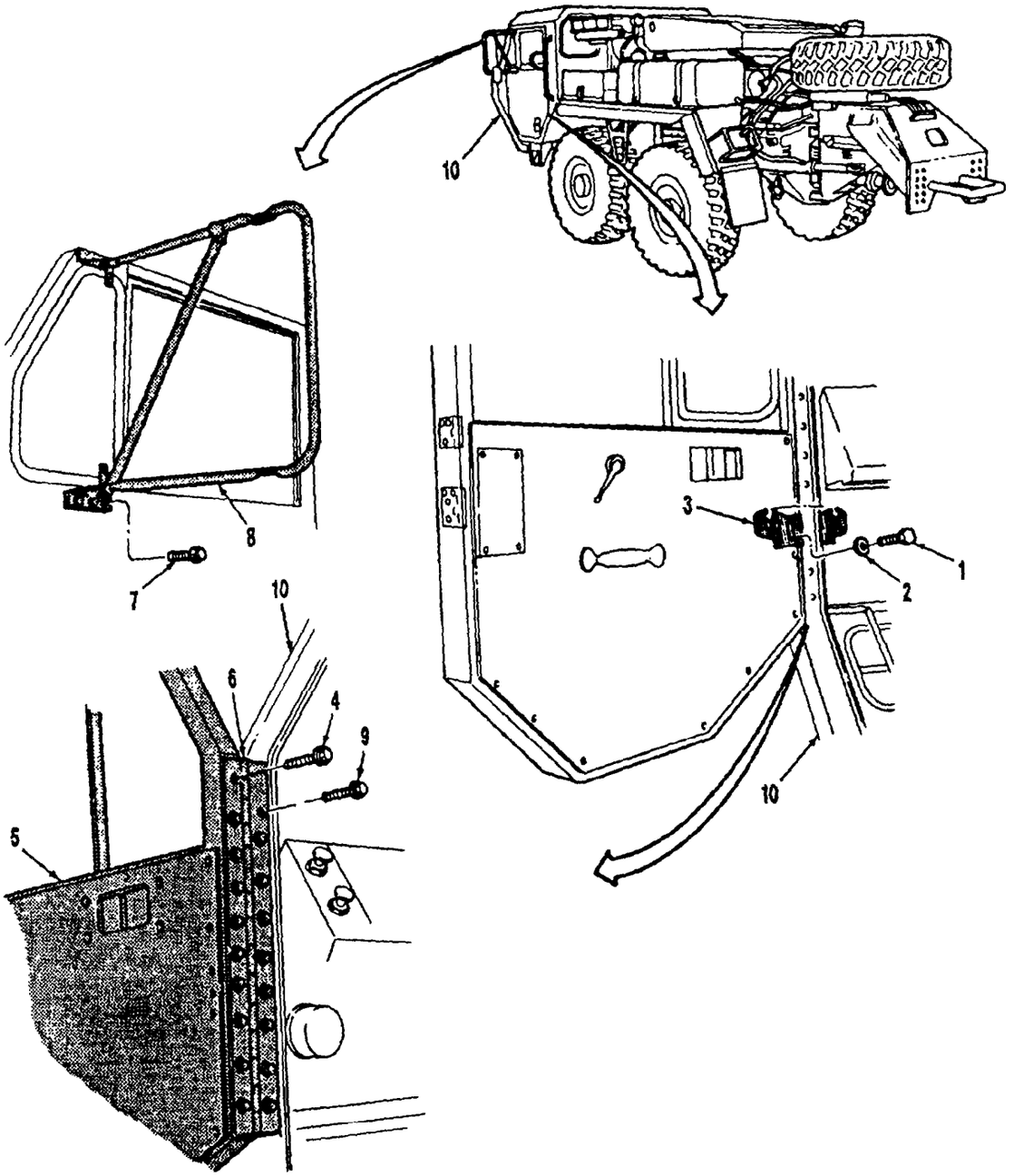

1. Capscrew (2)
2. Lockwasher (2)
3. Door Strap
4. Capscrew (10)
5. Door
6. Hinge
7. Capscrew (6)
8. Mirror Bracket
9. Capscrew (9)
10. Cab

Figure 2-85. Door and Mirror Bracket

WARNING

The door is very heavy and awkward to handle. To prevent personal injury, use an overhead lifting device to remove door from vehicle.

(2) Remove ten capscrews (4, Figure 2-85) from door (5) while holding door (5) up with overhead lifting device.

(3) Carefully remove door (5) from hinge (6).

NOTE

If hinge (6) is damaged, follow steps (4) and (5).

(4) Remove nine capscrews (9) from hinge (6).

(5) Remove hinge (6) from cab (10).

b. Mirror Bracket

NOTE

If door (5) is to be replaced, remove mirror bracket (8).

(1) Remove six capscrews (7) from door (5) and mirror bracket (8).

(2) Remove mirror bracket (8) from door (5).

2-72. AIR HORN CHAIN AND CONTROL VALVE

a. Air Horn Chain

(1) Spread chain link (3, Figure 2-86) and remove it and air horn chain (4) from control valve (2).

(2) Remove screw (8) and air horn chain (4) from cab (10).

b. Control Valve

NOTE

Tag all air lines before removal to ensure proper installation.

(1) Remove two air lines (1) from 90° elbows (7).

(2) Remove two screws (5) and lockwashers (6) from control valve (2). Discard lockwashers (6).

(3) Remove control valve (2) from cab (10).

(4) Remove 90° elbows (7) and 90° elbow (9) from control valve (2).

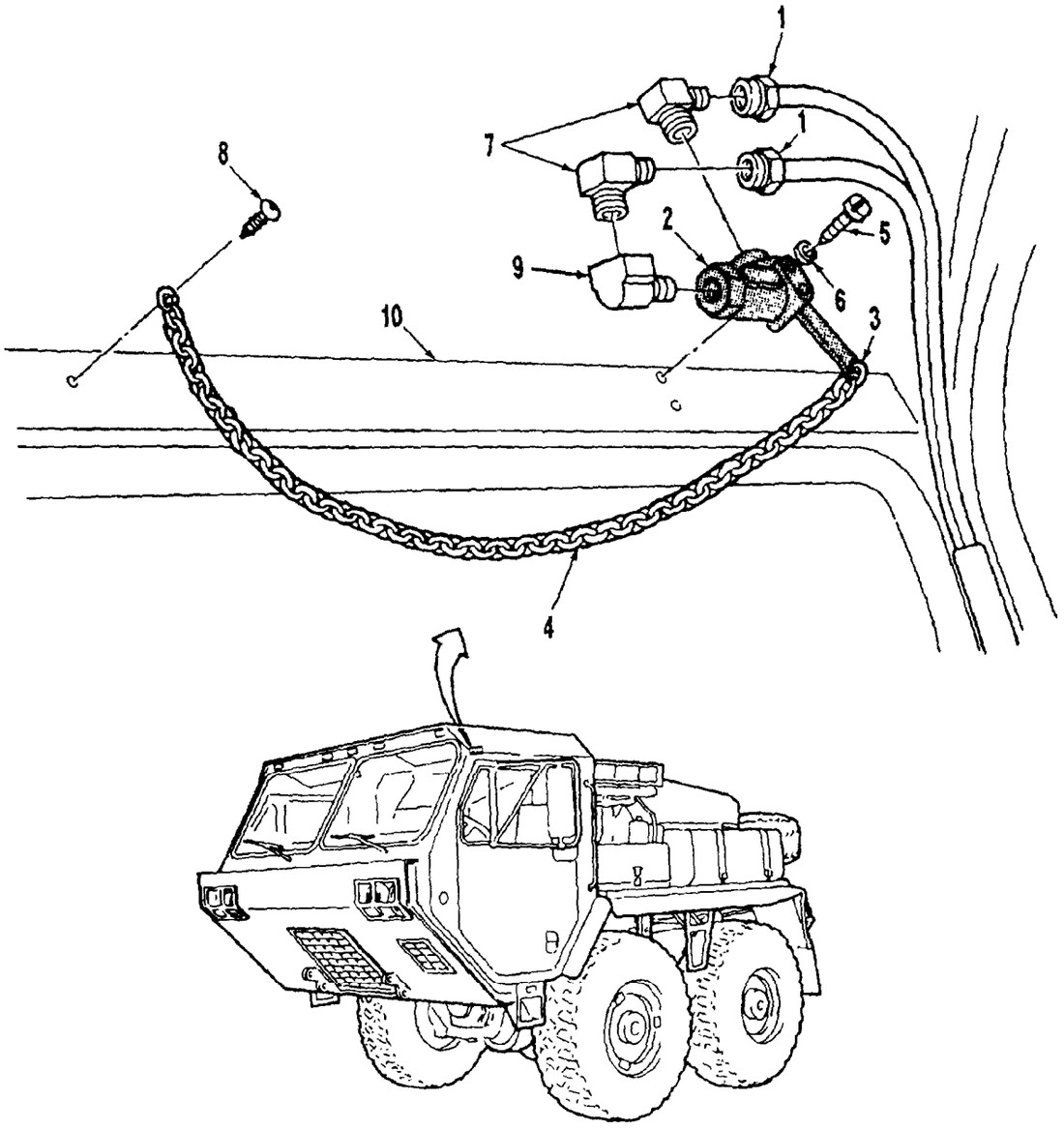

1. Air Line (2)
2. Control Valve
3. Chain Link
4. Air Horn Chain
5. Screw (2)
6. Lockwasher (2)
7. 90° Elbow (2)
8. Screw
9. 90° Elbow
10. Cab

Figure 2-86. Air Horn Chain and Control Valve

2-73. SUN VISORS

NOTE

This procedure works for both sun visors.

a. Remove four capscrews (2, Figure 2-87) from sun visor (1).

b. Remove sun visor (1) from cab (3).

2-74. HEADLIGHT DIMMER SWITCH

a. Remove two capscrews (1, Figure 2-88) and lockwashers (2) from headlight dimmer switch (3). Discard lockwashers (2).

b. Remove headlight dimmer switch (3) from mounting plate (4).

NOTE

Tag all wires before removal to ensure proper installation.

c. Remove three screws (5), retainers (6), and wires (7, 8, 9, 10, 11, and 12) from headlight dimmer switch (3).

2-75. ACCESS COVERS

a. Roof Access Cover

(1) Remove 36 capscrews (2, Figure 2-89) from roof access cover (1).

(2) Remove roof access cover (1) from cab (3).

b. Top Engine Access Cover

(1) Remove 12 screw and washer assemblies (1, Figure 2-90) from top engine access cover (2).

(2) Remove top engine access cover (2) from cab (10).

c. Rear Heater Compartment Access Cover

(1) Remove four screw and washer assemblies (4) from rear heater compartment access cover (3).

(2) Remove three warning/indicator lights (11) from rear heater compartment access cover (3). Refer to Paragraph 2-76 for removal of warning/indicator lights.

(3) Remove eight screws (13) and placards (12) from rear heater compartment access cover (3). Refer to Paragraph 2-151 for removal of placards.

(4) Remove rear heater compartment access cover (3) from cab (10).

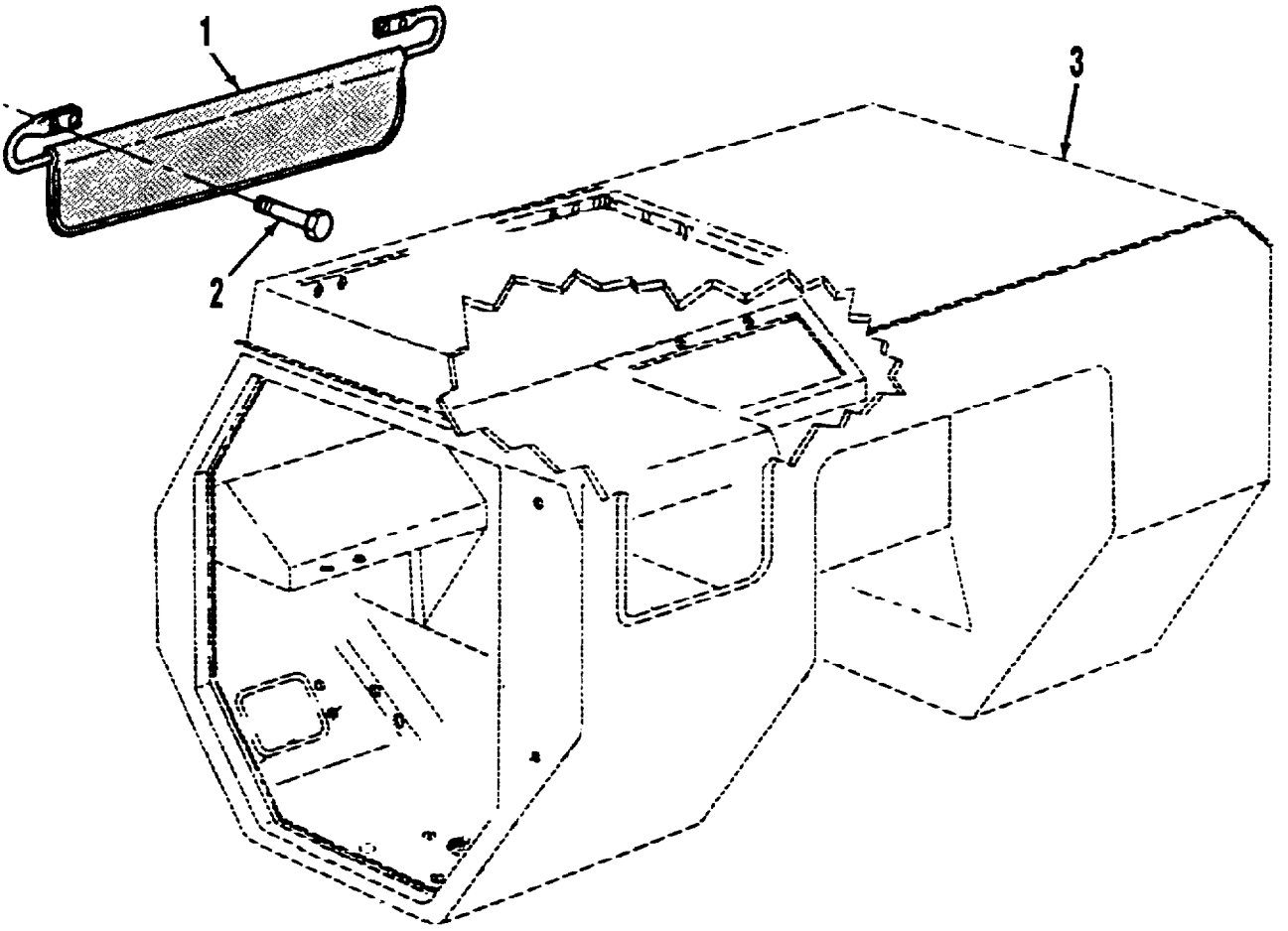

1. Sun Visor
2. Capscrew (4)
3. Cab

Figure 2-87. Sun Visors

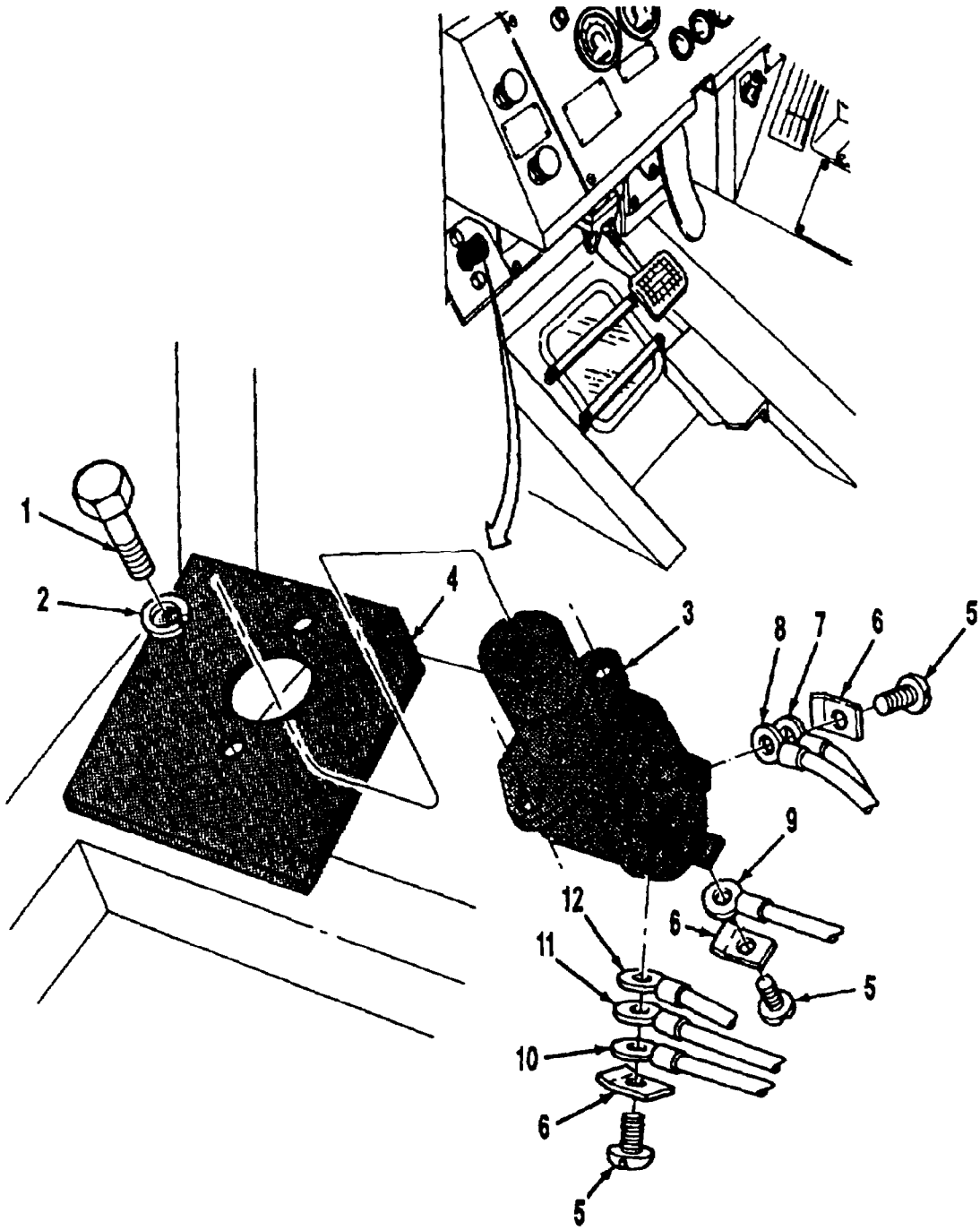

1. Capscrew (2)
2. Lockwasher (2)
3. Headlight Dimmer Switch
4. Mounting Plate
5. Screw (3)
6. Retainer (3)
7. Wire (No. 006)
8. Wire (No. 18/006)
9. Wire (No. 017)
10. Wire (No. 17/007)
11. Wire (No. 018)
12. Wire (No. 17/007)

Figure 2-88. Headlight Dimmer Switch

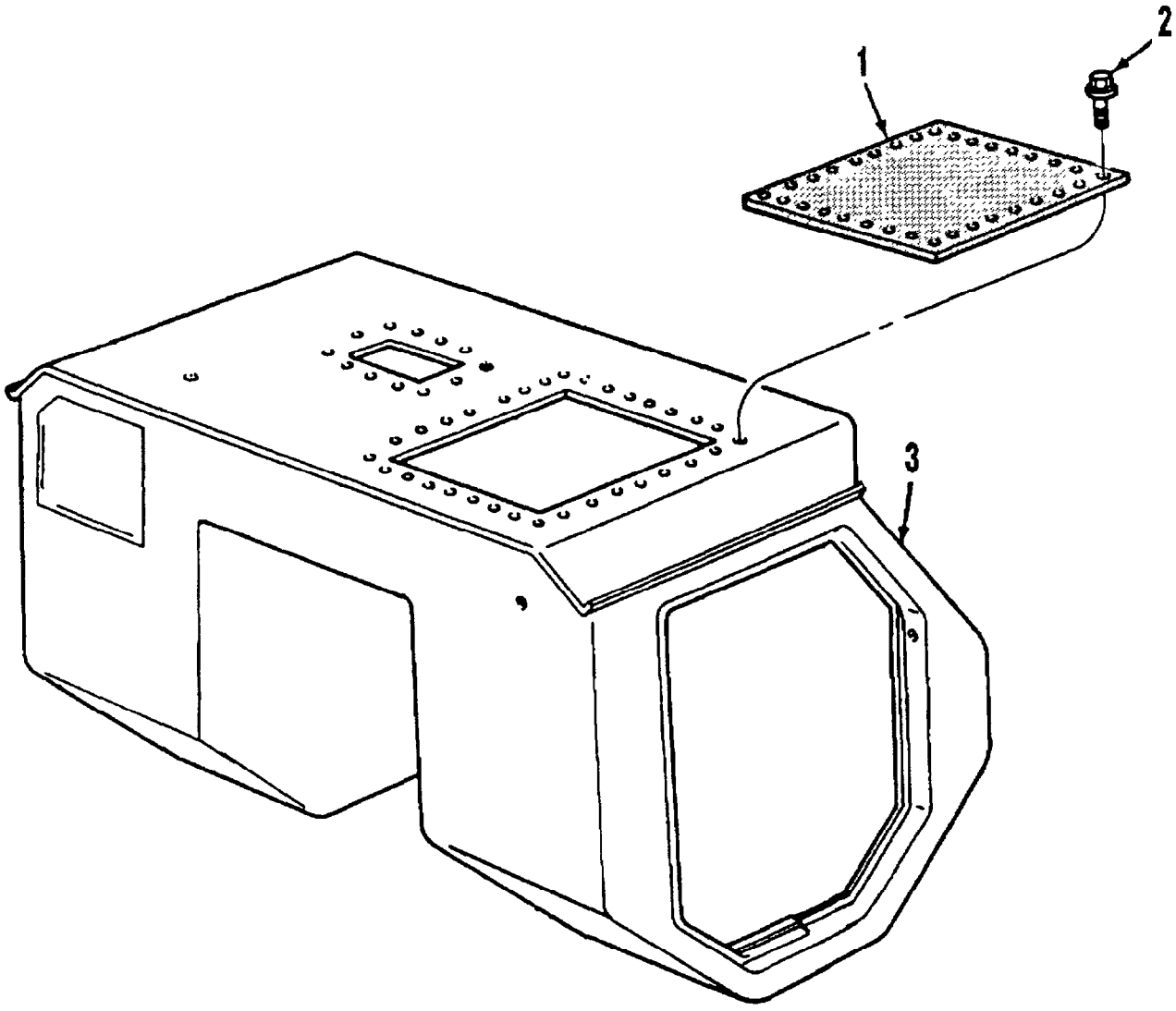

1. Roof Access Cover
2. Capscrew (36)
3. Cab

Figure 2-89. Roof Access Cover

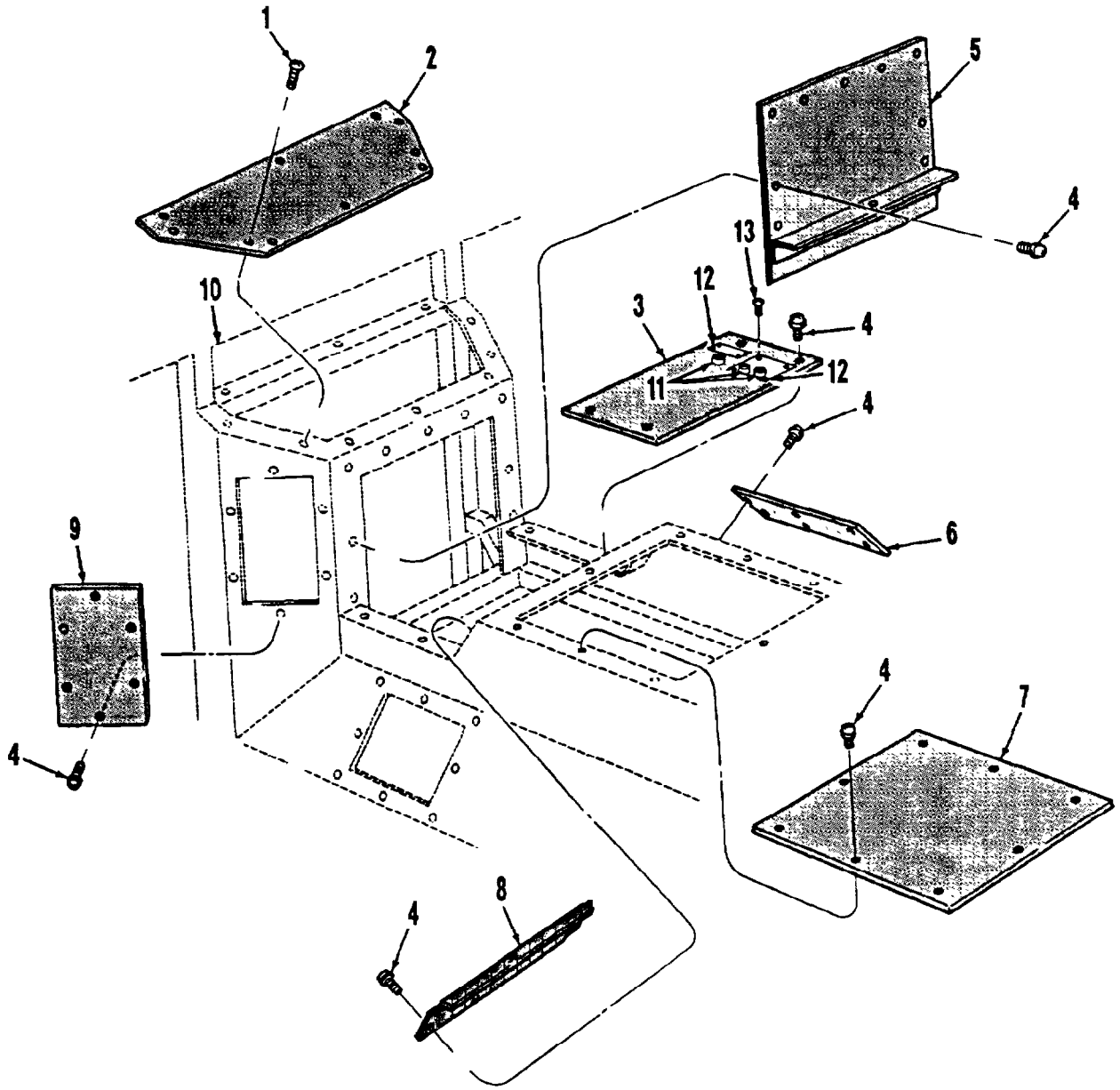

1. Screw and Washer Assembly (12)
2. Top Engine Access Cover
3. Rear Heater Compartment Access Cover
4. Screw and Washer Assembly (41)
5. Front Engine Access Cover
6. Left Access Cover
7. Front Heater Compartment Access Cover
8. Center Heater Compartment Access Cover
9. Auxiliary Access Cover
10. Cab
11. Warning/Indicator Light (3)
12. Placard (2)
13. Screw (8)

Figure 2-90. Access Covers

d. Front Engine Access Cover

(1) Remove nine screw and washer assemblies (4, Figure 2-90) from front engine access cover (5).

(3) Remove front engine access cover (5) from cab (10).

e. Left Access Cover

(1) Remove six screw and washer assemblies (4) from left access cover (6).

(2) Remove left access cover (6) from cab (10).

f. Front Heater Compartment Access Cover

(1) Remove eight screw and washer assemblies (4) from front heater compartment access cover (7).

(2) Remove front heater compartment access cover (7) from cab (10).

g. Center Heater Compartment Access Cover

(1) Remove four screw and washer assemblies (4) from center heater compartment access cover (8).

(2) Remove center heater compartment access cover (8) from cab (10).

h. Auxiliary Access Cover

(1) Remove ten screw and washer assemblies (4) from auxiliary access cover (9).

(4) Remove auxiliary access cover (9).

2-76. WARNING/INDICATOR LIGHTS

NOTE

This procedure works for all warning/indicator lights.

a. Remove socket (1, Figure 2-91) from rear of lens assembly (3).

b. Remove bulb (2) from socket (1).

c. Remove rubber shield (4) from front of lens assembly (3).

d. Remove nut (5), lens assembly (3), and star washer (6) from panel (7). Discard star washer (6).

2-77. OPTIC RIBBON LIGHT SOURCE

a. Unplug socket (1, Figure 2-92) and remove bulb (2) from socket (1).

b. Pry clip (8) up and pull out three optic ribbons (3, 4, and 5).

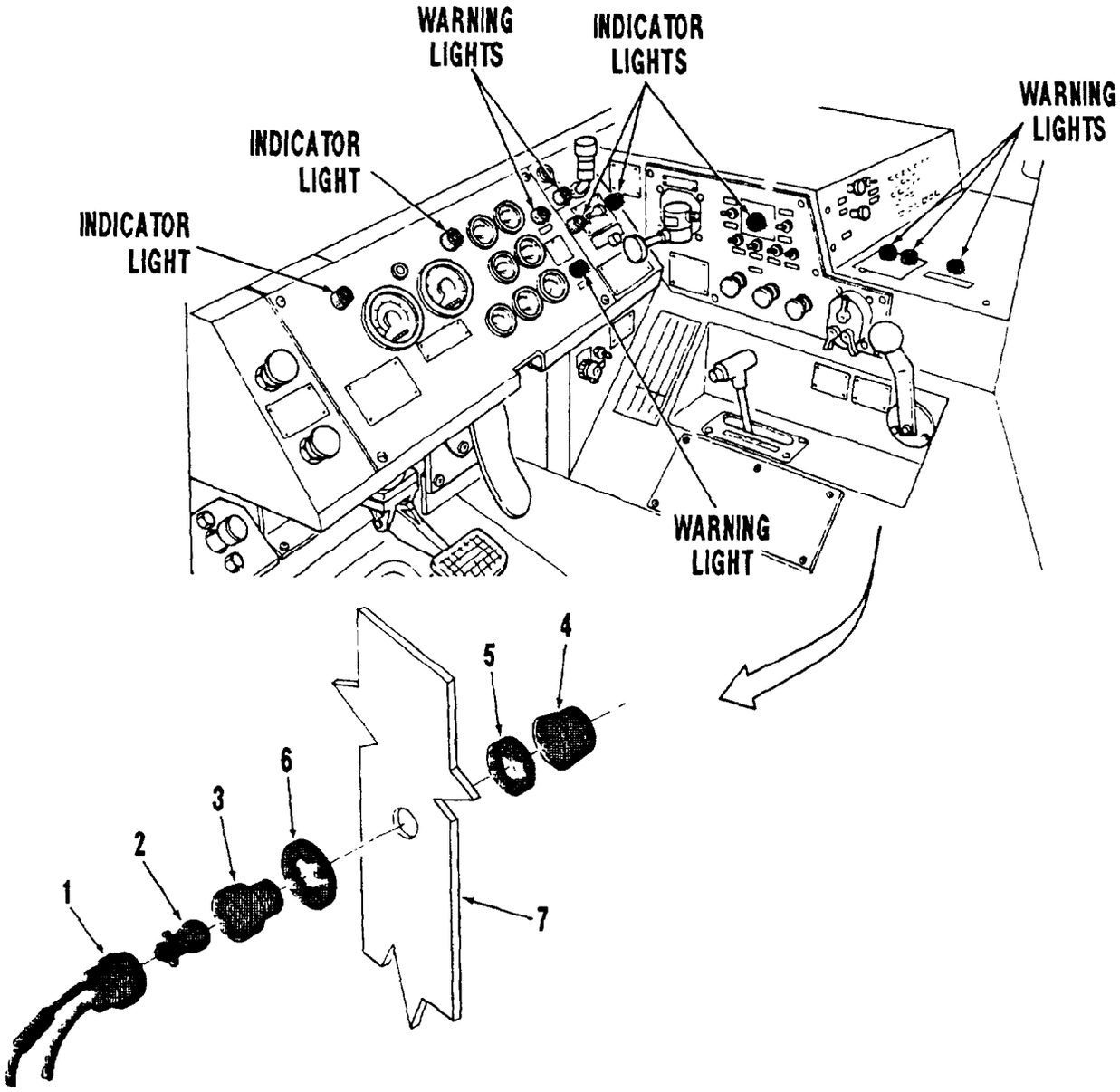

1. Socket
2. Bulb
3. Lens Assembly
4. Rubber Shield
5. Nut
6. Star Washer
7. Panel

Figure 2-91. Warning/Indicator Lights

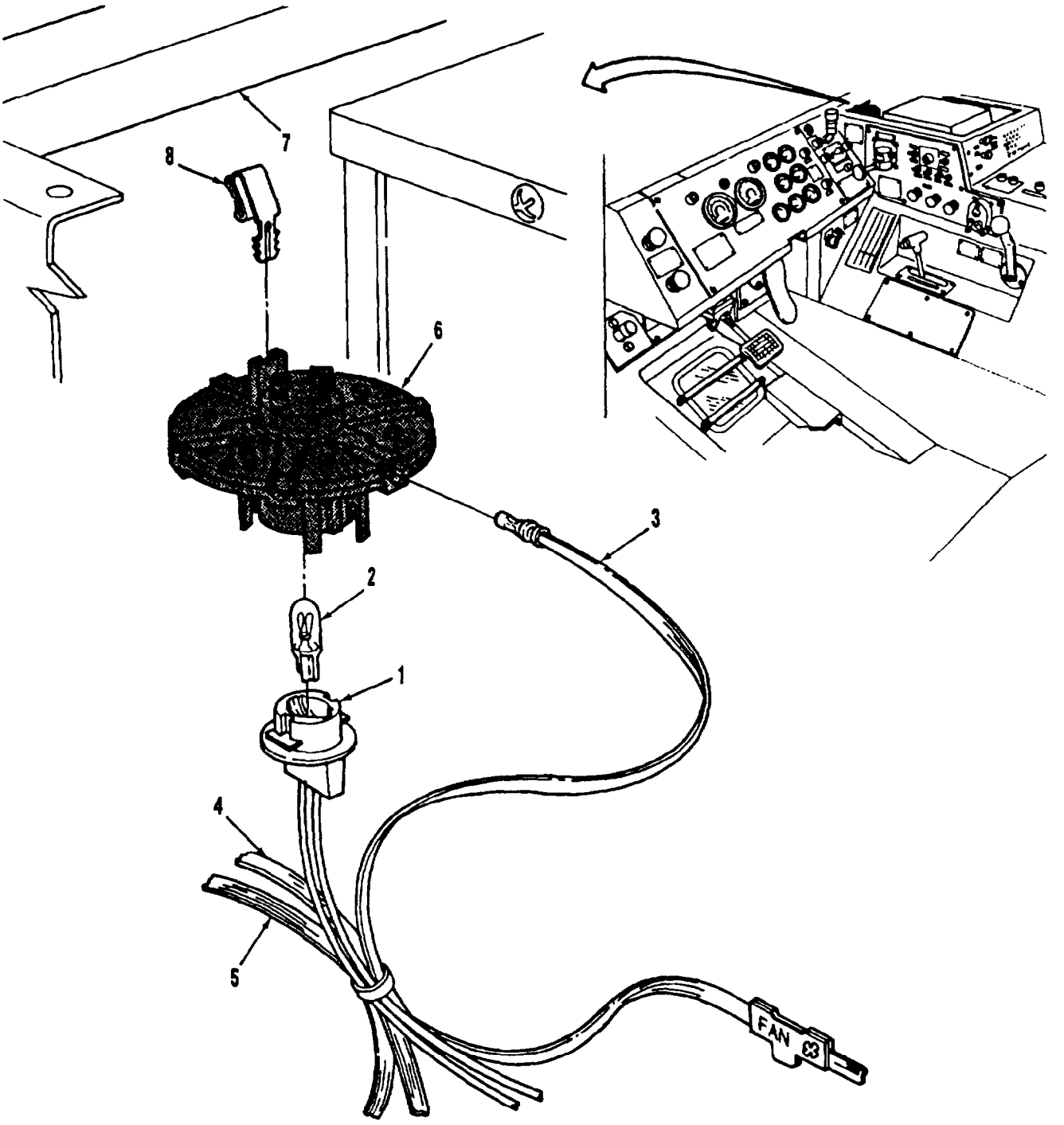

1. Socket
2. Bulb
3. Optic Ribbon
4. Optic Ribbon
5. Optic Ribbon
6. Optic Ribbon Light Source
7. Dash Panel
8. Clip

Figure 2-92. Optic Ribbon Light Source

c. Remove optic ribbon light source (6) from dash panel (7).

d. Remove clip (8) from optic ribbon light source (6)

2-78. OPTIC RIBBONS

NOTE

Tag each panel opening before removing optic ribbon to ensure proper installation.

a. Depress tab (2, Figure 2-93) on back of title applique (3) and remove clip (4).

b. Repeat step a for all title appliques (3) of optic ribbon (1).

c. Remove panel (5) if any clip (4) needs to be replaced.

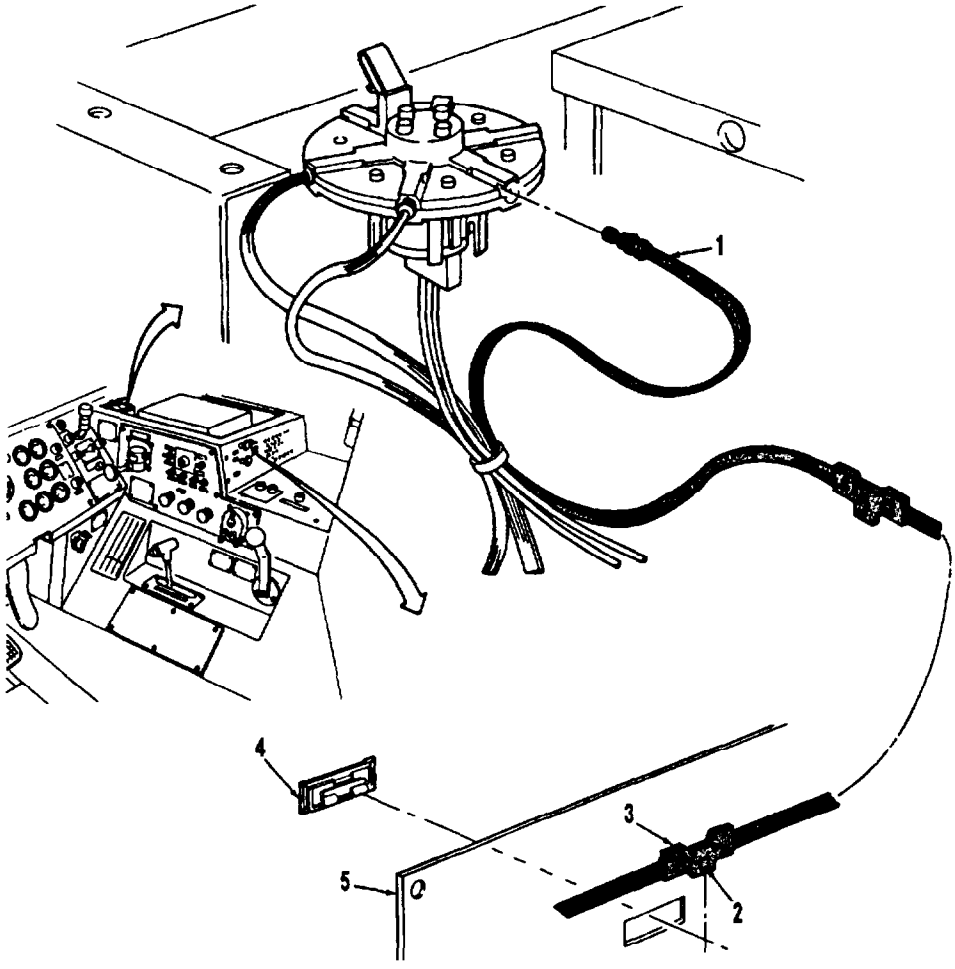

1. Optic Ribbon
2. Tab
3. Title Applique
4. Clip
5. Panel

Figure 2-93. Optic Ribbons

2-79. TOGGLE SWITCHES

WARNING

To prevent personal injury, disconnect batteries. Do not wear watches, rings, and other jewelry when working on electrical components.

NOTE

Tag all wires before removal to ensure proper installation.

This procedure works for two position and three position toggle switches.

a. Remove nut (1, Figure 2-94) from toggle switch (2).

b. Remove toggle switch (2) from panel (3).

c. Remove washer (4) and nut (5) from toggle switch (2).

d. Remove screws (6) and wires (7) from toggle switch (2).

2-80. CIRCUIT BREAKERS

WARNING

To prevent personal injury, disconnect batteries. Do not wear watches, rings, and other jewelry when working on electrical components.

NOTE

Circuit breakers (1 through 13, Figure 2-95) may have as many as six wires on one terminal.

Tag all wires before removal to ensure proper installation.

This procedure works for all circuit breakers.

a. Remove two nuts (14) and wires (15) from terminals (16 and 17).

b. Remove nut (18), wires (15), and bus bar (19), if used, from adjoining circuit breaker.

c. Remove two screws (20) and star washers (21) from circuit breaker (13). Discard star washers (21).

d. Pry up on circuit breakers (1 through 12) until they are free from mounting strip (22).

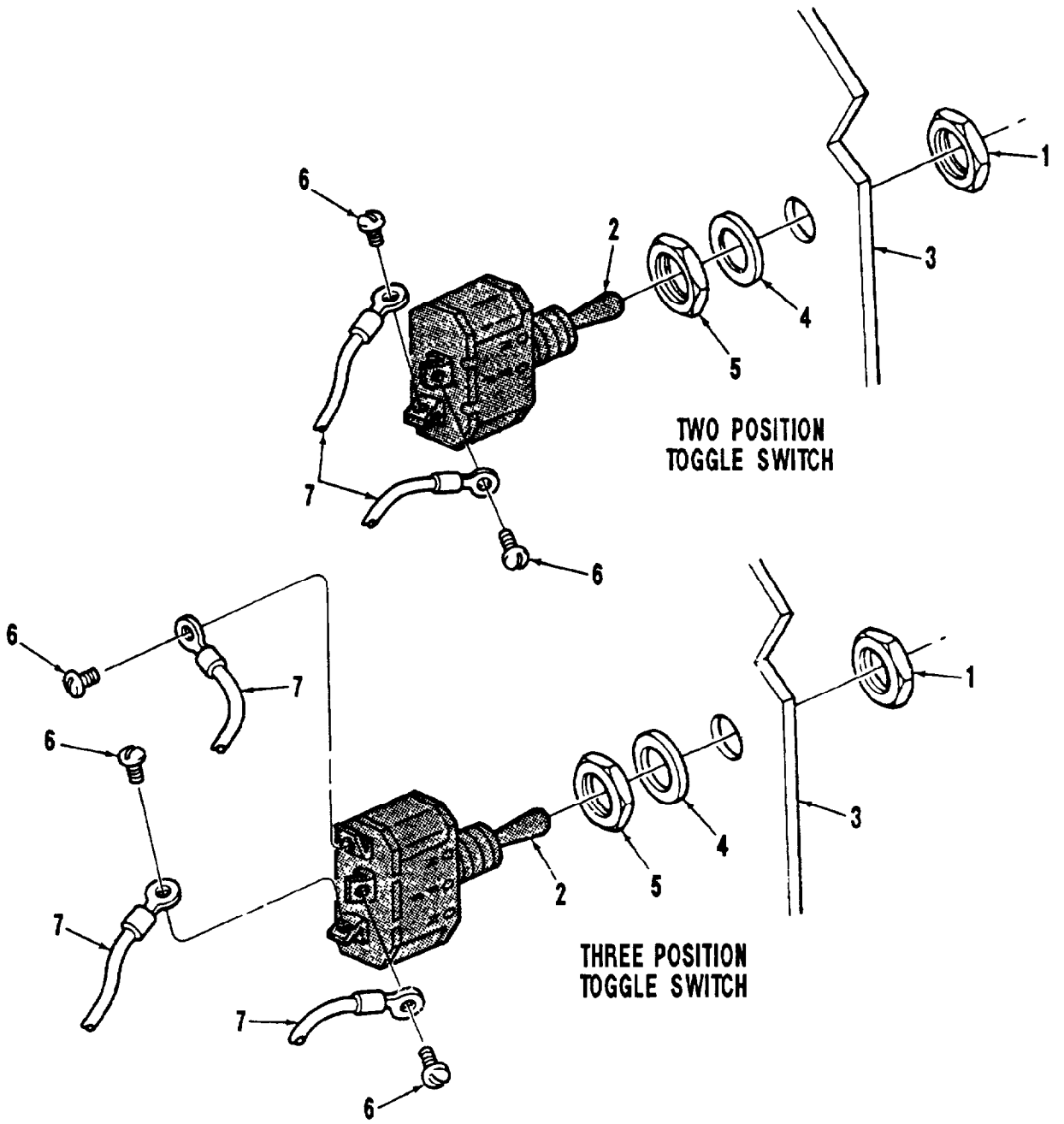

1. Nut
2. Toggle Switch
3. Panel
4. Washer
5. Nut
6. Screw
7. Wire

Figure 2-94. Toggle Switches

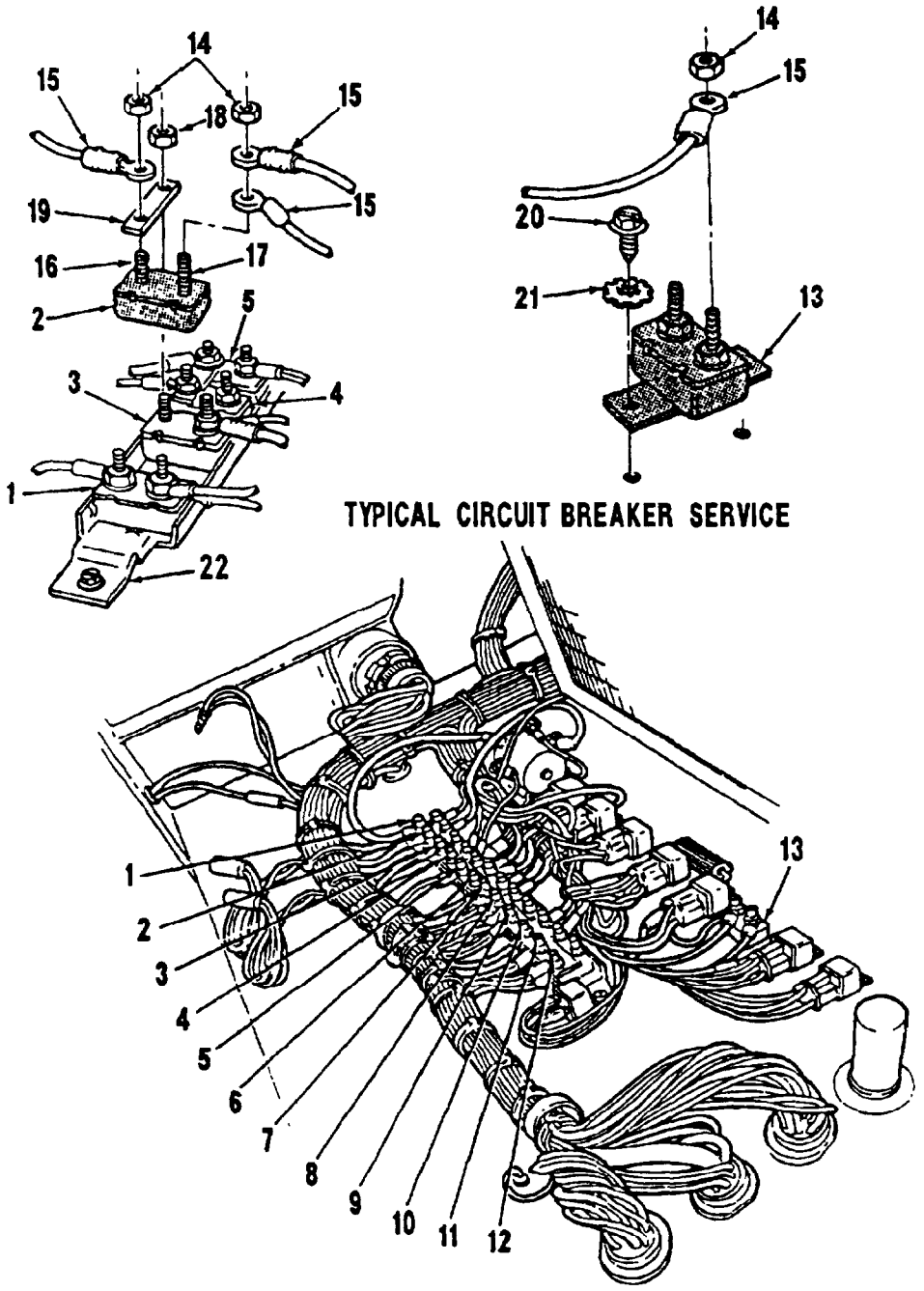

1. Circuit Breaker
2. Circuit Breaker
3. Circuit Breaker
4. Circuit Breaker
5. Circuit Breaker
6. Circuit Breaker
7. Circuit Breaker
8. Circuit Breaker
9. Circuit Breaker
10. Circuit Breaker
11. Circuit Breaker
12. Circuit Breaker
13. Circuit Breaker
14. Nut (2)
15. Wire
16. Terminal
17. Terminal
18. Nut
19. Bus Bar
20. Screw (2)
21. Star Washer (2)
22. Mounting Strip

Figure 2-95. Circuit Breakers

2-81. MAGNETIC SWITCHES

WARNING

To prevent personal injury, disconnect batteries. Do not wear watches, rings, and other jewelry when working on electrical components.

NOTE

Tag all wires before removal to ensure proper installation.

This procedure works for all magnetic switches on the MK48.

a. Remove two nuts (1, Figure 2-96) and wires (2 and 3) from magnetic switch (9).

b. Remove two nuts (4) and wires (5 and 6) from magnetic switch (9).

c. Remove two capscrews (7), star washers (8), and wire (5) from magnetic switch (9). Discard star washers (8).

d. Remove magnetic switch (9) from mounting surface (10).

2-82. RELAY SWITCHES

WARNING

To prevent personal injury, disconnect batteries. Do not wear watches, rings, and other jewelry when working on electrical components.

NOTE

Tag all wires before removal to ensure proper installation.

This procedure works for all relay switches on the MK48.

a. Remove plug (1, Figure 2-97) from relay switch (2).

b. Remove capscrew (3) and star washer (4) from relay switch (2) and mounting surface (6). Discard star washer (4).

c. Remove ground wire (5) from relay switch (2).

d. Remove relay switch (2) from mounting surface (6).

2-83. RESISTORS

WARNING

To prevent personal injury, disconnect batteries. Do not wear watches, rings, and other jewelry when working on electrical components.

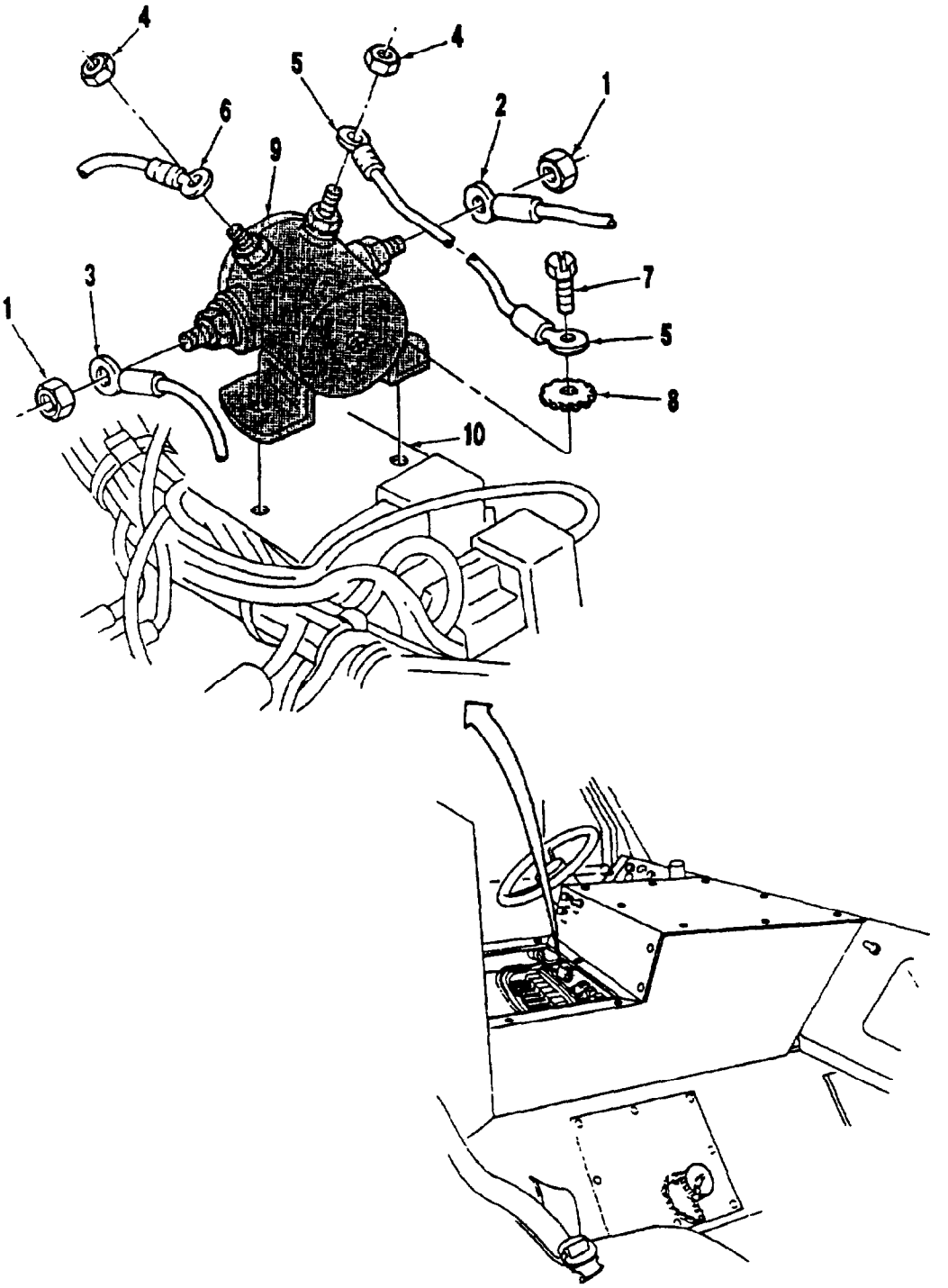

1. Nut (2)
2. Wire (No. 835)
3. Wire (No. 836)
4. Nut (2)
5. Wire (No. 196)
6. Wire (No. 837)
7. Capscrew
8. Star Washer (2)
9. Magnetic Switch
10. Mounting Surface

Figure 2-96. Magnetic Switches

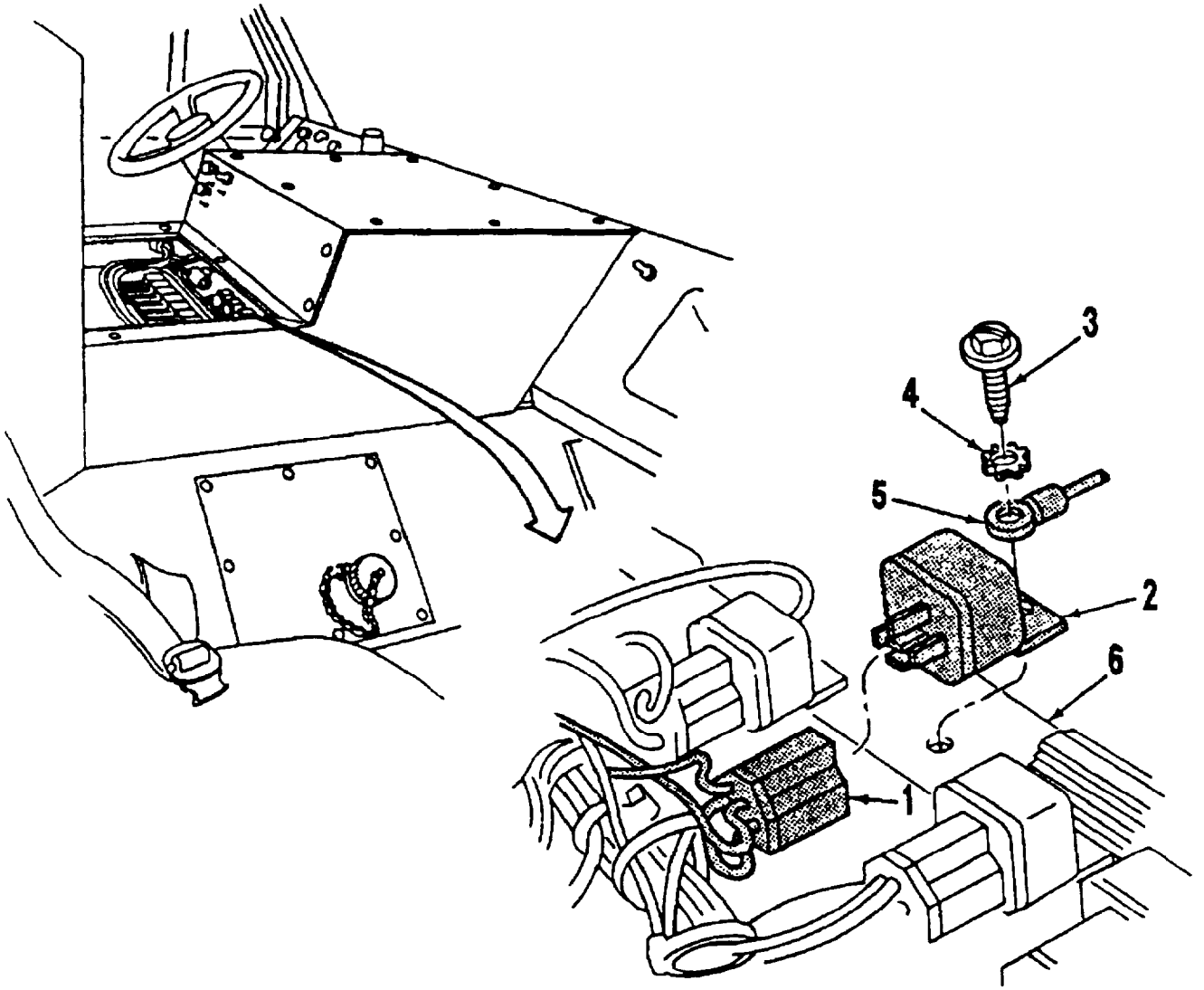

1. Plug
2. Relay Switch
3. Capscrew
4. Star Washer
5. Ground Wire
6. Mounting Surface

Figure 2-97. Relay Switches

NOTE

Tag all wires before removal to ensure proper installation.

This procedure works for all resistors on the MK48.

a. Unplug two wires (1 and 2, Figure 2-98) from connectors (5).

b. Remove two screws (3) from resistor (4).

c. Remove resistor (4) from mounting surface (6).

2-84. DOME LIGHT

WARNING

To prevent personal injury, disconnect batteries. Do not wear watches, rings, and other jewelry when working on electrical components.

NOTE

Tag all wires before removal to ensure proper installation.

a. Remove two Phillips-head screws (1, Figure 2-99) from lens (2).

b. Turn bulb (3) counterclockwise and remove it from socket fixture (4).

c. Remove four Phillips-head screws (5) from dome light base (6).

d. Unplug wire (9) and remove dome light base (6) from dome light bracket (8).

e. Remove two flanged capscrews (7) and dome light bracket (8) from vehicle.

2-85. MAP LIGHT

WARNING

To prevent personal injury, disconnect batteries. Do not wear watches, rings, and other jewelry when working on electrical components.

NOTE

Tag all wires before removal to ensure proper installation.

Locknut (7), capscrew (8), and defroster duct guard (9) removed previously. Refer to Paragraph 2-64.

a. Rotate lens (1, Figure 2-100) counterclockwise 1/4 turn and remove from base (5).

b. Remove bulb (2) from base (5).

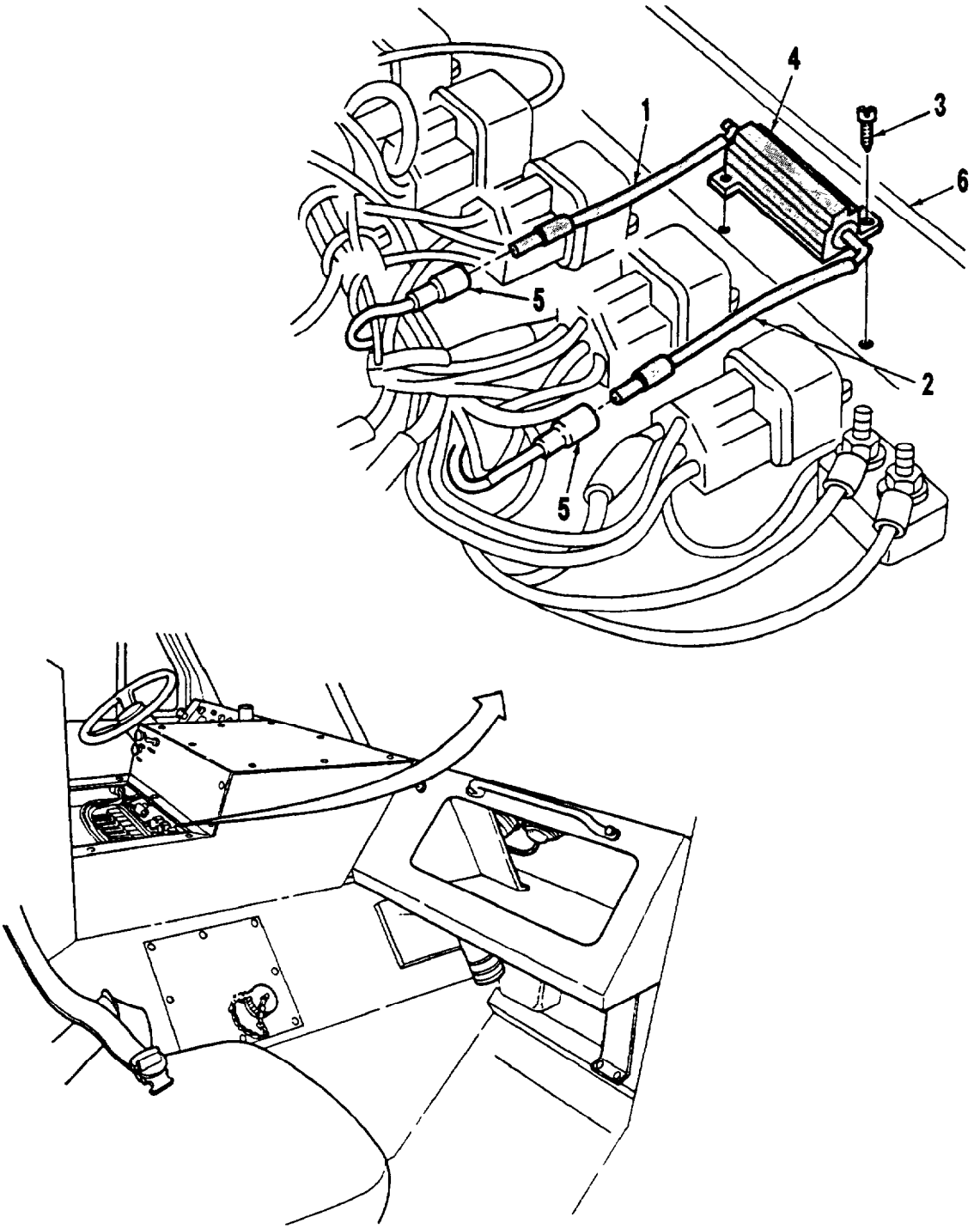

1. Wire (No. 677)
2. Wire (No. 677)
3. Screw (2)
4. Resistor
5. Connector
6. Mounting Surface

Figure 2-98. Resistors

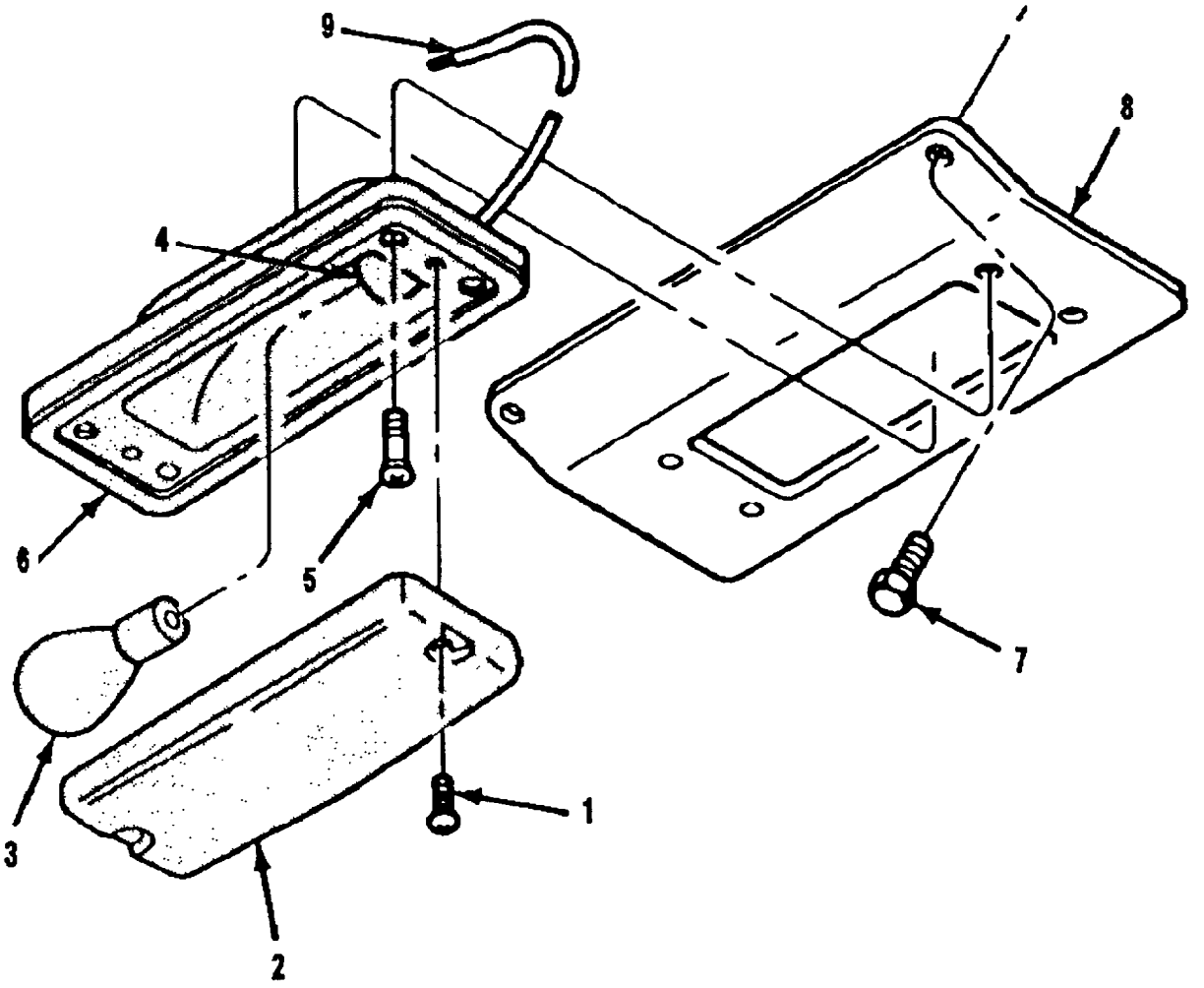

1. Phillips-Head Screw (2)
2. Lens
3. Bulb
4. Socket Fixture
5. Phillips-Head Screw (4)
6. Dome Light Base
7. Flanged Capscrew (2)
8. Dome Light Bracket
9. Wire

Figure 2-99. Dome Light

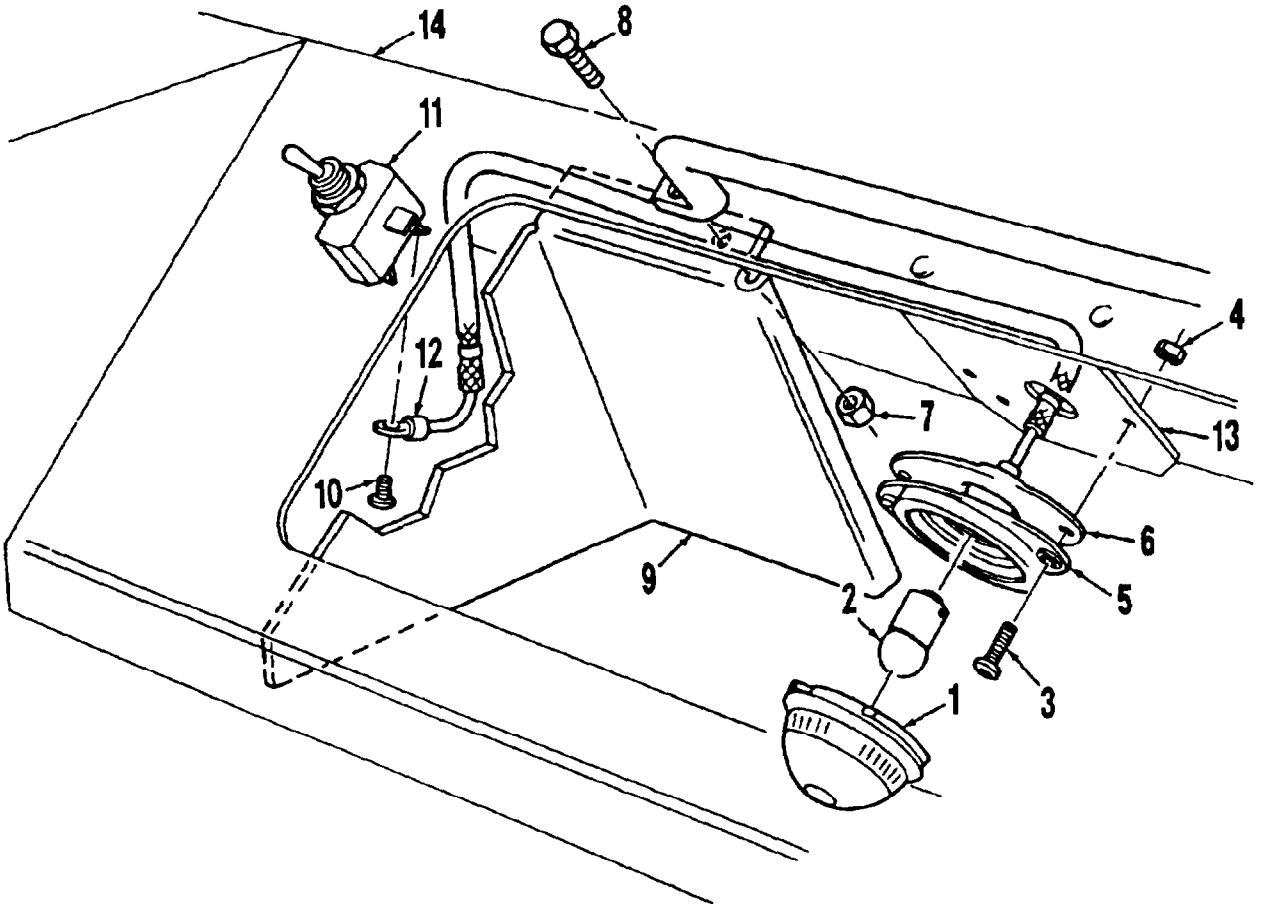

1. Lens
2. Bulb
3. Screw (2)
4. Nut (2)
5. Base
6. Gasket
7. Locknut
8. Capscrew
9. Defroster Duct Guard
10. Screw
11. Toggle Switch
12. Wire (No. 413)
13. Mounting Surface
14. Dash Panel

Figure 2-100. Map Light

c. Remove two nuts (4) and screws (3) from base (5), gasket (6), and mounting surface (13).

d. Remove screw (10) and wire (12) from toggle switch (11). Refer to Paragraph 2-79 for toggle switch removal.

e. Remove base (5), gasket (6), and wire (12) from mounting surface (13) and dash panel (14).

2-86. INSTRUMENT PANEL ASSEMBLY

WARNING

To prevent personal injury, disconnect batteries. Do not wear watches, rings, and other jewelry when working on electrical components.

NOTE

Tag all wires before removal to ensure proper installation.

a. Remove six screws (1, Figure 2-101) and move instrument panel assembly (2) away from dash panel (3).

NOTE

Tag all air lines before removal to ensure proper installation.

b. Disconnect two air lines (4 and 5) from air pressure gauge (9).

c. Disconnect plug (6) from socket (7).

d. Disconnect harness plug (8) from instrument panel assembly (2).

e. Remove instrument panel assembly (2) from dash panel (3).

2-87. LOW AIR PRESSURE ALARM

WARNING

To prevent personal injury, disconnect batteries. Do not wear watches, rings, and other jewelry when working on electrical components.

NOTE

Tag all wires before removal to ensure proper installation.

a. Unscrew knurled nut (4, Figure 2-102) and remove low air pressure alarm (5) from dash panel (8) to allow easy access to wires (2 and 3).

b. Remove one screw (1) and wire (2) from negative terminal (6).

c. Remove one screw (1) and wire (3) from positive terminal (7).

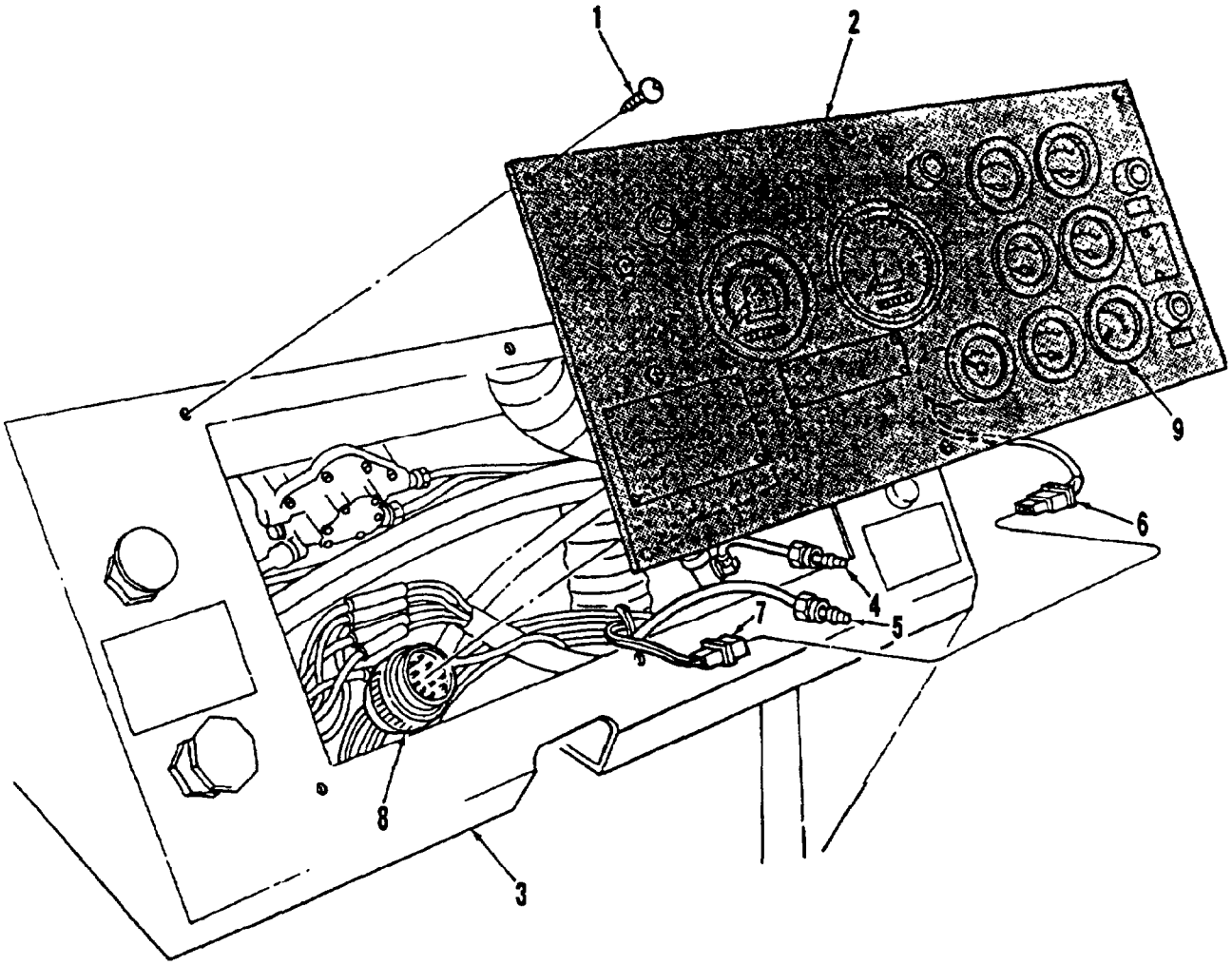

1. Screw (6)
2. Instrument Panel Assembly
3. Dash Panel
4. Air Line (No. 041)
5. Air Line (No. 610)
6. Plug
7. Socket
8. Harness Plug
9. Air Pressure Gauge

Figure 2-101. Instrument Panel Assembly

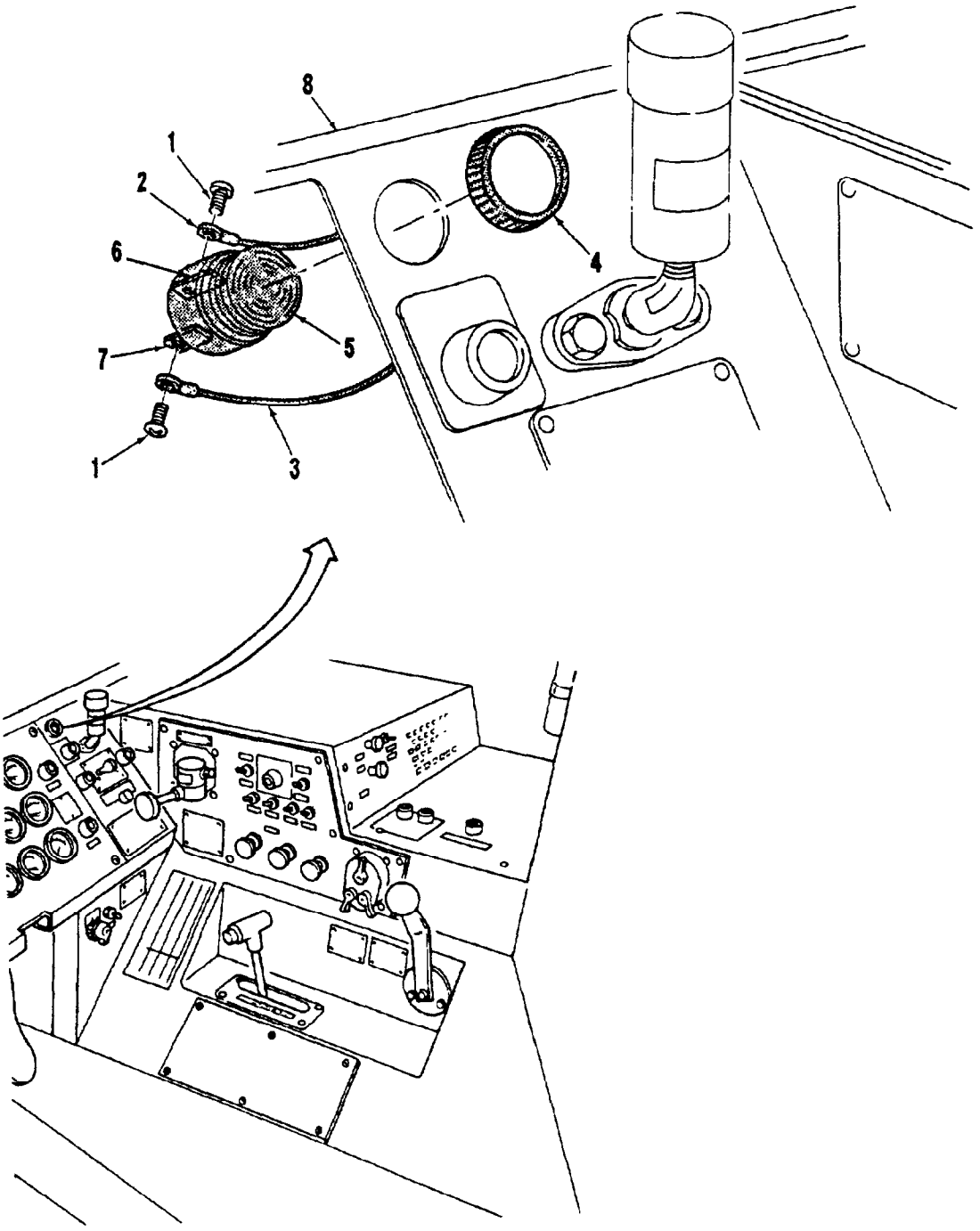

1. Screw (2)
2. Wire (No. 525)
3. Wire (No. 033)
4. Knurled Nut
5. Low Air Pressure Alarm
6. Negative Terminal
7. Positive Terminal
8. Dash Panel

Figure 2-102. Low Air Pressure Alarm

2-88. TRAILER AIR SUPPLY VALVE

WARNING

To prevent personal injury, disconnect batteries. Do not wear watches, rings, and other jewelry when working on electrical components.

Air lines under pressure will move violently when removed. To prevent personal injury, drain all air pressure from system before removing pressurized components.

NOTE

Tag all wires and air lines before removal to ensure proper installation.

Note location and position of 90° elbows and tee fitting before removal to ensure proper installation.

a. Remove two wires (1, Figure 2-103) from terminals (2) on pressure switch (3).

b. Remove three air lines (4) from 90° elbows (5, 6, and 7).

c. Remove roll pin (8) from knob (9). Discard roll pin (8).

d. Remove knob (9) from trailer air supply valve (11).

e. Remove nut (10) from trailer air supply valve (11).

f. Remove trailer air supply valve (11) from dash panel (12).

g. Remove 90° elbows (5 and 6) from trailer air supply valve (11).

h. Remove 90° elbow (7) and pressure switch (3) from tee fitting (13).

i. Remove tee fitting (13) from trailer air supply valve (11).

2-89. PARKING BRAKE VALVE

WARNING

Air lines under pressure will move violently when removed. To prevent personal injury, drain all air pressure from system before removing pressurized components.

a. Remove roll pin (1, Figure 2-104) from knob (2) and remove knob (2) from parking brake valve (4). Discard roll pin (1).

b. Remove nut (3) from parking brake valve (4).

c. Push parking brake valve (4) through dash panel (5).

d. Reach under dash panel (5) and pull parking brake valve (4) down, with air lines attached, until clear.

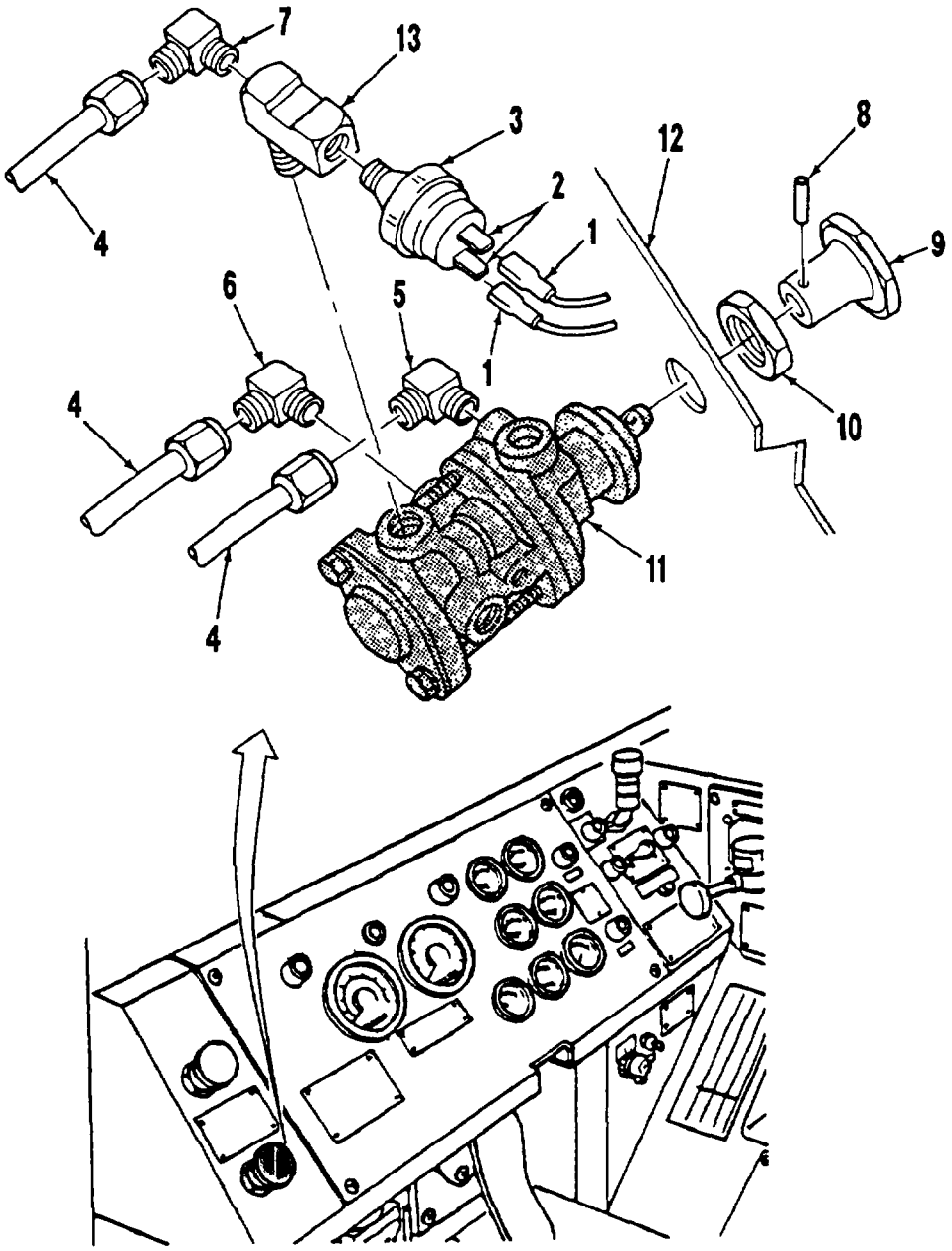

1. Wire (2)
2. Terminal (2)
3. Pressure Switch
4. Air Line (3)
5. 90° Elbow
6. 90° Elbow
7. 90° Elbow
8. Roll Pin
9. Knob
10. Nut
11. Trailer Air Supply Valve
12. Dash Panel
13. Tee Fitting

Figure 2-103. Trailer Air Supply Valve

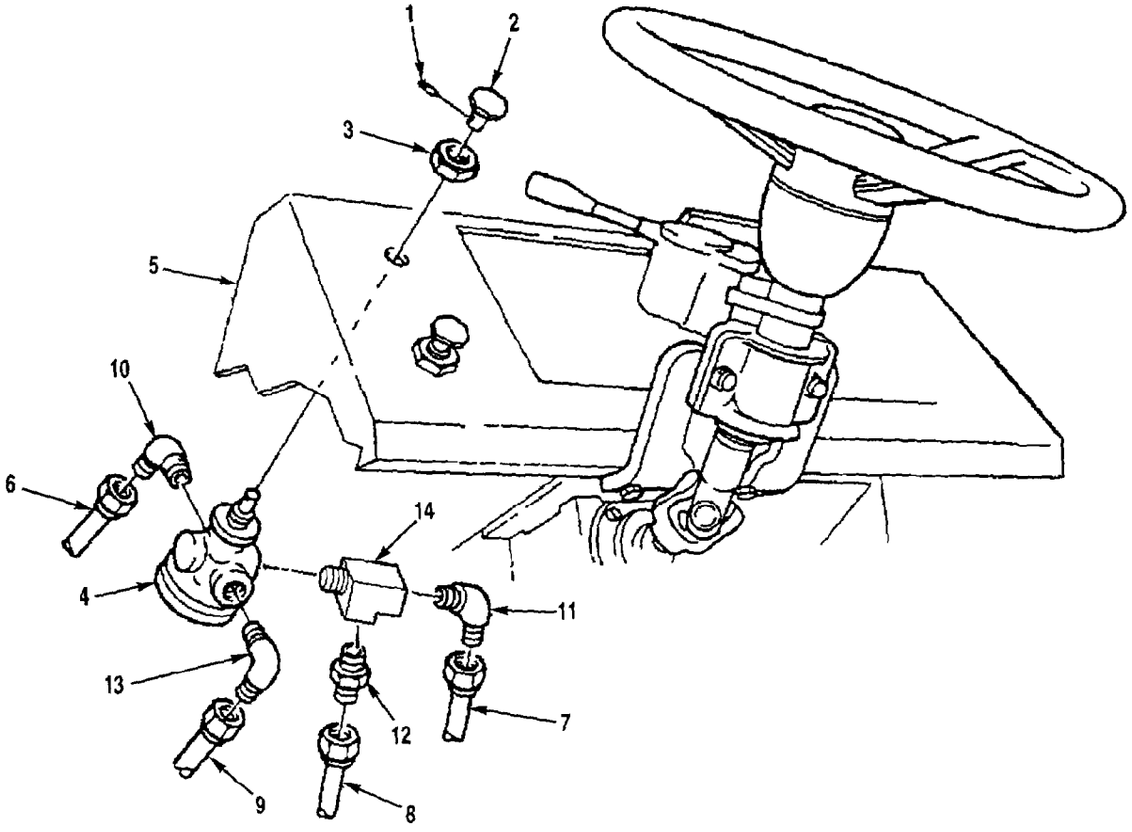

1. Roll Pin
2. Knob
3. Nut
4. Parking Brake Valve
5. Dash Panel
6. Air Line (No. 661)
7. Air Line (No. 612)
8. Air Line (No. 54)
9. Air Line (No. 611)
10. 90° Elbow
11. 90° Elbow
12. Straight Fitting
13. 90° Elbow
14. Tee Fitting
15. Deleted

Figure 2-104. Parking Brake Valve

NOTE

Tag all air lines before removal to ensure proper installation.

e. Remove three air lines (6, 7, and 9) from 90° elbows (10, 11, and 13) respectively.

f. Remove air line (8) from straight fitting (12).

g. Remove parking brake valve (4) from dash panel (5).

h. Remove two 90° elbows (10 and 13) from parking brake valve (4).

i. Remove 90° elbow (11) from tee fitting (14).

j. Remove straight fitting (12) from tee fitting (14).

NOTE

Air line fittings for the LVSA1 parking brake valve have changed from a nipple and tee to street tee. When repairing a non-A1 vehicle, use the new style fittings to replace the old style fittings. Refer to TM 9-2320-297-24P for correct parts identification.

k. Deleted

l. Remove tee fitting (14) from parking brake valve (4).

2-90. ETHER START SWITCH

a. Remove rubber boot (1, Figure 2-105) and knurled nut (2) from ether start switch (3).

b. Pull ether start switch (3) out of dash panel (4).

WARNING

To prevent personal injury, disconnect batteries. Do not wear watches, rings, and other jewelry when working on electrical components.

NOTE

Tag all wires before removal to ensure proper installation.

c. Remove two screws (5), star washers (6), and wires (7 and 8) from ether start switch (3). Discard star washers (6).

d. Remove adjustment nut (9) from ether start switch (3).

2-91. DRIVE LINE LOCKUP SWITCH

WARNING

To prevent personal injury, disconnect batteries. Do not wear watches, rings, and other jewelry when working on electrical components.

Air lines under pressure will move violently when removed. To prevent personal injury, drain all air pressure from system before removing pressurized components.

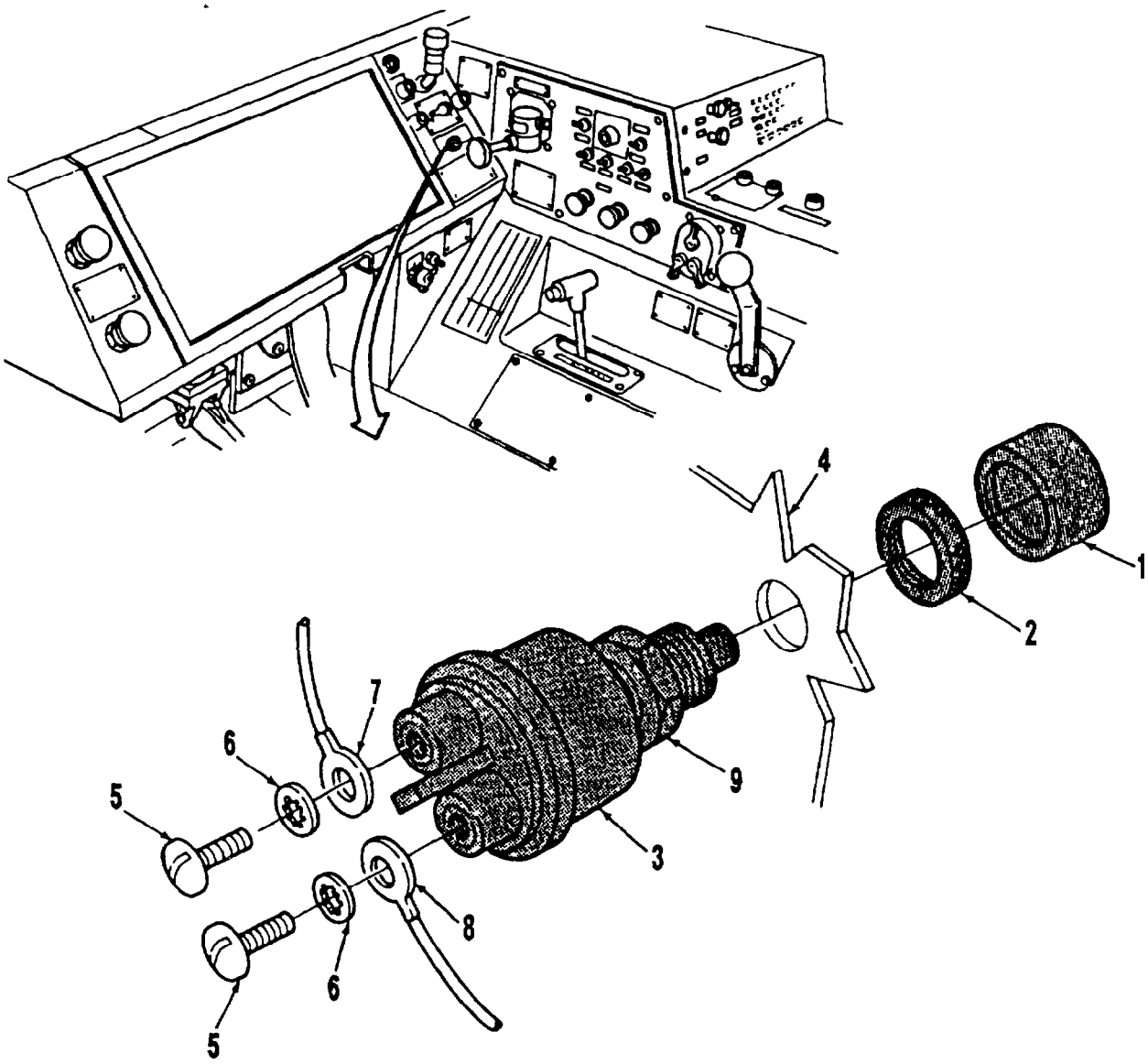

1. Rubber Boot
2. Knurled Nut
3. Ether Start Switch
4. Dash Panel
5. Screw (2)
6. Star Washer (2)
7. Wire
8. Wire
9. Adjustment Nut

Figure 2-105. Ether Start Switch

NOTE

Tag all wires and air lines before removal to ensure proper installation.

a. Remove two screws (1, Figure 2-106) from instruction plate (2) and drive line lockup switch (3).

b. Turn drive line lockup switch (3) and remove it from dash panel (4).

c. Remove two screws (5), lockwashers (6), and wires (7) from pressure switches (8). Discard lockwashers (6).

d. Remove two screws (9), lockwashers (10), and jumper wire (11) from pressure switches (8). Discard lockwashers (10).

e. Remove three air lines (12) from two 90° elbows (13) and 90° elbow (14) on drive line lockup switch (3).

f. Remove 90° elbow (13) from tee fitting (16).

g. Remove four screws (15) and instruction plate (2) from dash panel (4).

h. Remove pressure switch (8) from tee fitting (16).

i. Remove tee fitting (16) and 90° elbow (17) from side of drive line lockup switch (3).

j. Remove tee fitting (16) from 90° elbow (17).

k. Repeat steps g through k for remaining fittings.

l. Remove 90° elbow (14) from top of drive line lockup switch (3).

2-92. AIR RESTRICTION INDICATOR

a. Unscrew air restriction indicator (1, Figure 2-107) from elbow (2).

b. Remove elbow (2) from mounting flange (3).

NOTE

If mounting flange is damaged, follow steps c through e.

Tag vacuum line before removal to ensure proper installation.

c. Loosen line nut (7) and remove vacuum line (8) from adapter (10).

d. Remove two nuts (5), lockwashers (6), capscrews (9), and mounting flange (3) from dash panel (4). Discard lockwashers (6).

e. Remove adapter (10) from mounting flange (3).

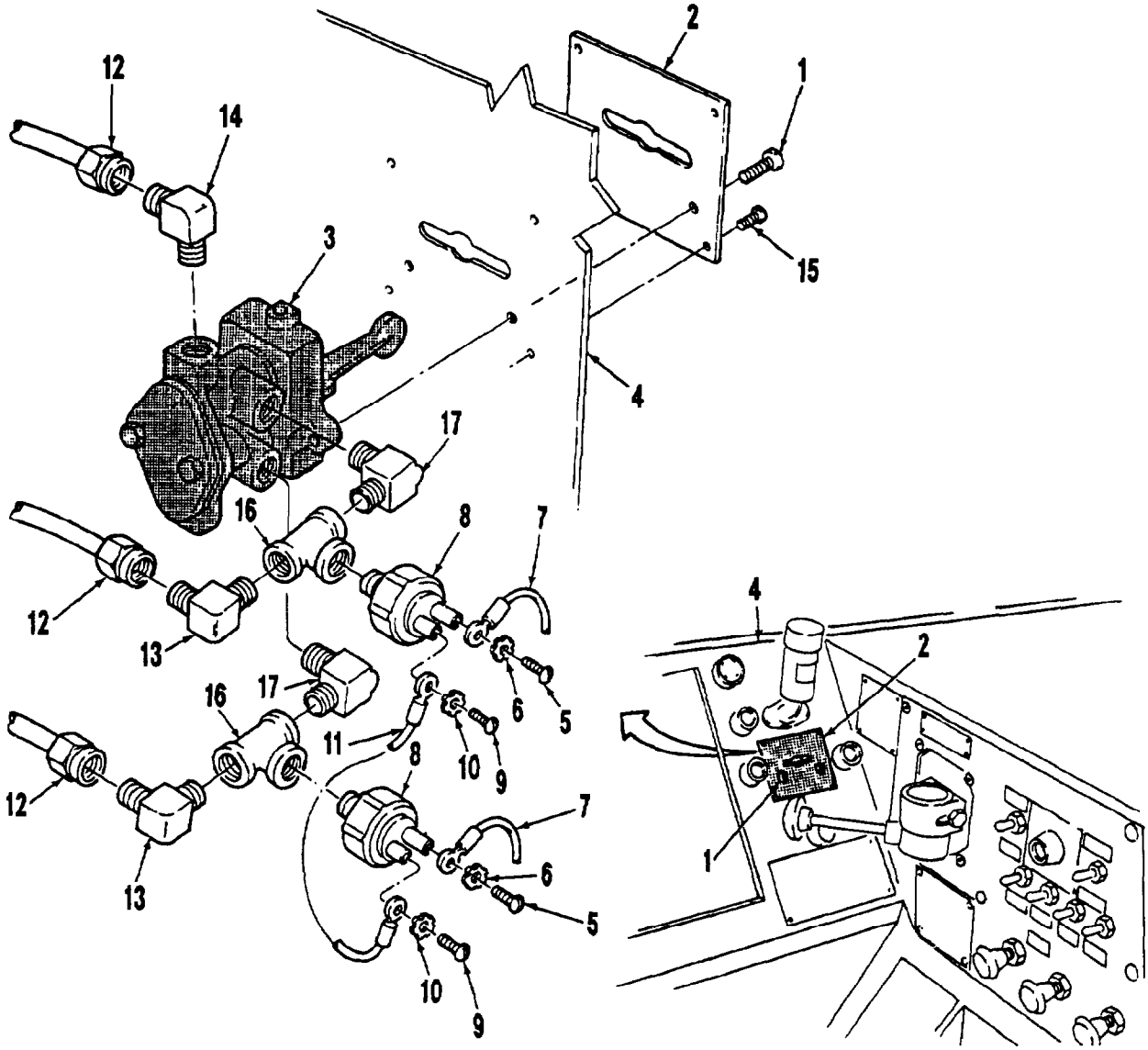

1. Screw (2)
2. Instruction Plate
3. Drive Line Lockup Switch
4. Dash Panel
5. Screw (2)
6. Lockwasher (2)
7. Wire (2)
8. Pressure Switch (2)
9. Screw (2)
10. Lockwasher (2)
11. Jumper Wire
12. Air Line (3)
13. 90° Elbow (3)
14. 90° Elbow
15. Screw (4)
16. Tee Fitting
17. 90° Elbow

Figure 2-106. Drive Line Lockup Switch

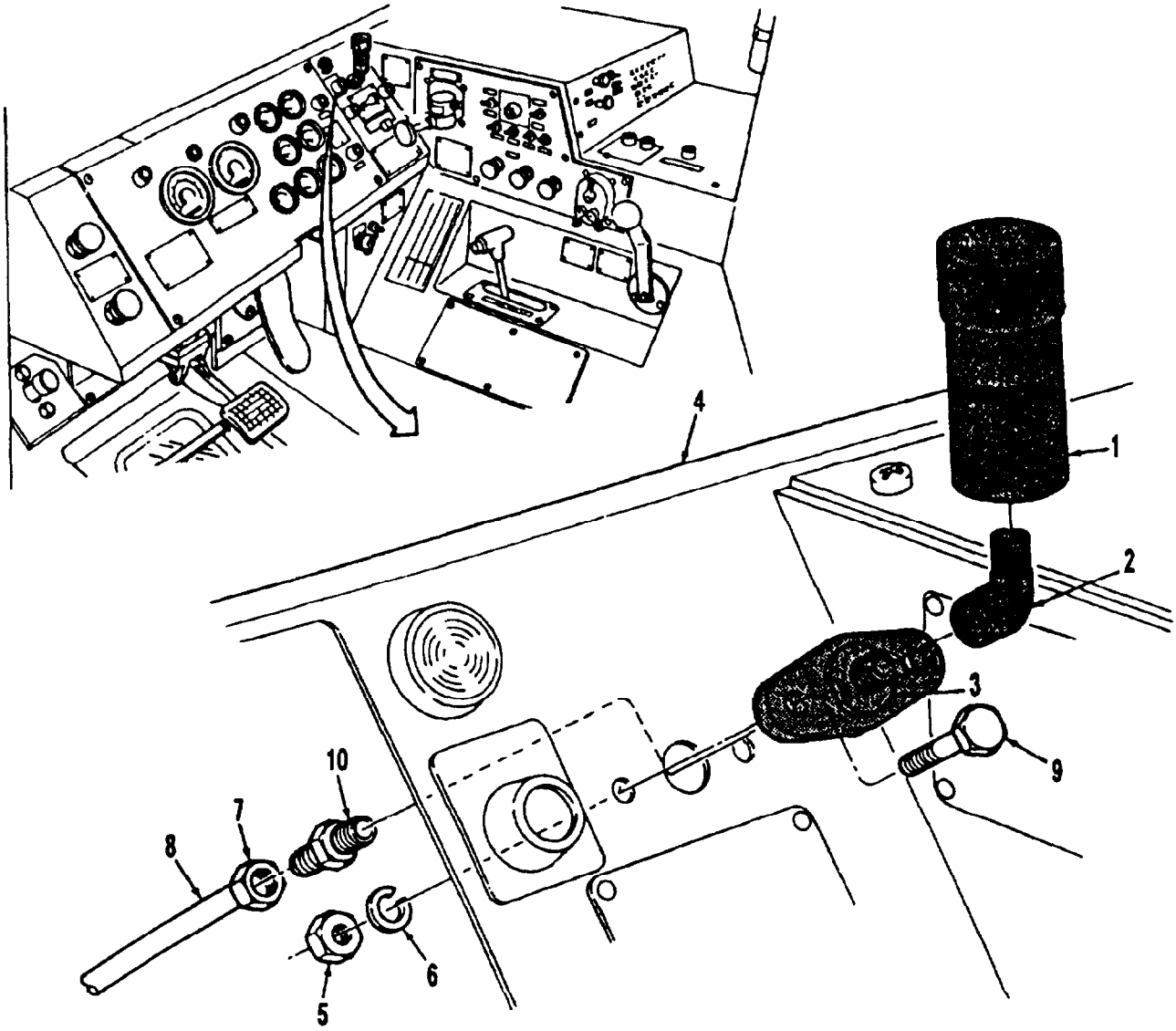

1. Air Restriction Indicator
2. Elbow
3. Mounting Flange
4. Dash Panel
5. Nut (2)
6. Lockwasher (2)
7. Line Nut
8. Vacuum Line
9. Capscrew (2)
10. Adapter

Figure 2-107. Air Restriction Indicator

2-93. IGNITION SWITCH

WARNING

To prevent personal injury, disconnect batteries. Do not wear watches, rings, and other jewelry when working on electrical components.

NOTE

Tag all wires before removal to ensure proper installation.

a. Remove screw (1, Figure 2-108), lockwasher (2), and knob (3) from ignition switch (5). Discard lockwasher (2).

b. Remove knurled nut (4) and push ignition switch (5) through dash panel (6).

c. Pull ignition switch (5) down below dash panel (6) for easy access to wiring on rear of ignition switch (5).

d. Remove five screws (7), retainers (8), and wires (9, 10, 11, 12, and 13) from ignition switch (5).

2-94. WINDSHIELD WIPER MOTORS

WARNING

Air lines under pressure will move violently when removed. To prevent personal injury, drain all air pressure from system before removing pressurized components.

NOTE

Tag all air lines before removal to ensure proper installation.

This procedure works for both windshield wiper motors.

a. Remove knurled driver (1, Figure 2-109), rubber shield (2), nut (3), washer (4), and seal washer (5) from windshield wiper motor shaft (6).

b. Remove two capscrews (7) from windshield wiper motor (15).

NOTE

Nut (9), lockwasher (10), capscrew (8), and defroster duct guard (11) are removed previously. Refer to paragraph 2-64.

c. Remove two air lines (12) from straight fittings (13).

d. Remove hose (14) from fitting (17).

NOTE

Perform step d.1. on LVSA1 series vehicles only.

d.1. Remove two screws (18), self-locking nuts (19) and mounting plate (20) from wiper motor (21).

e. Remove windshield wiper motor (15) from under dash panel (16).

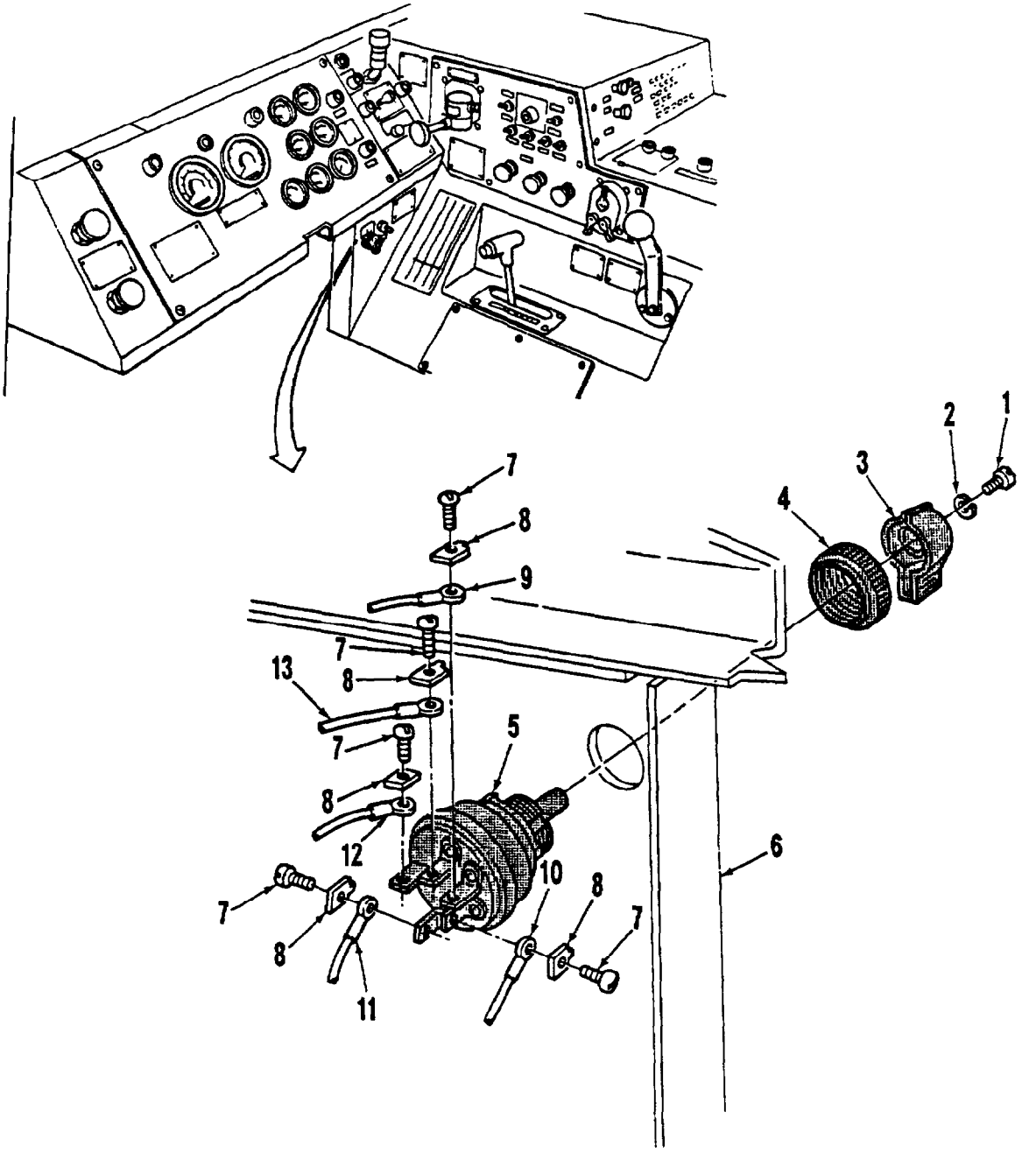

1. Screw
2. Lockwasher
3. Knob
4. Knurled Nut
5. Ignition Switch
6. Dash Panel
7. Screw (5)
8. Retainer (5)
9. Wire (No. 830)
10. Wire (No. 431)
11. Wire (No. 640)
12. Wire (No. 436)
13. Wire (No. 075)

Figure 2-108. Ignition Switch

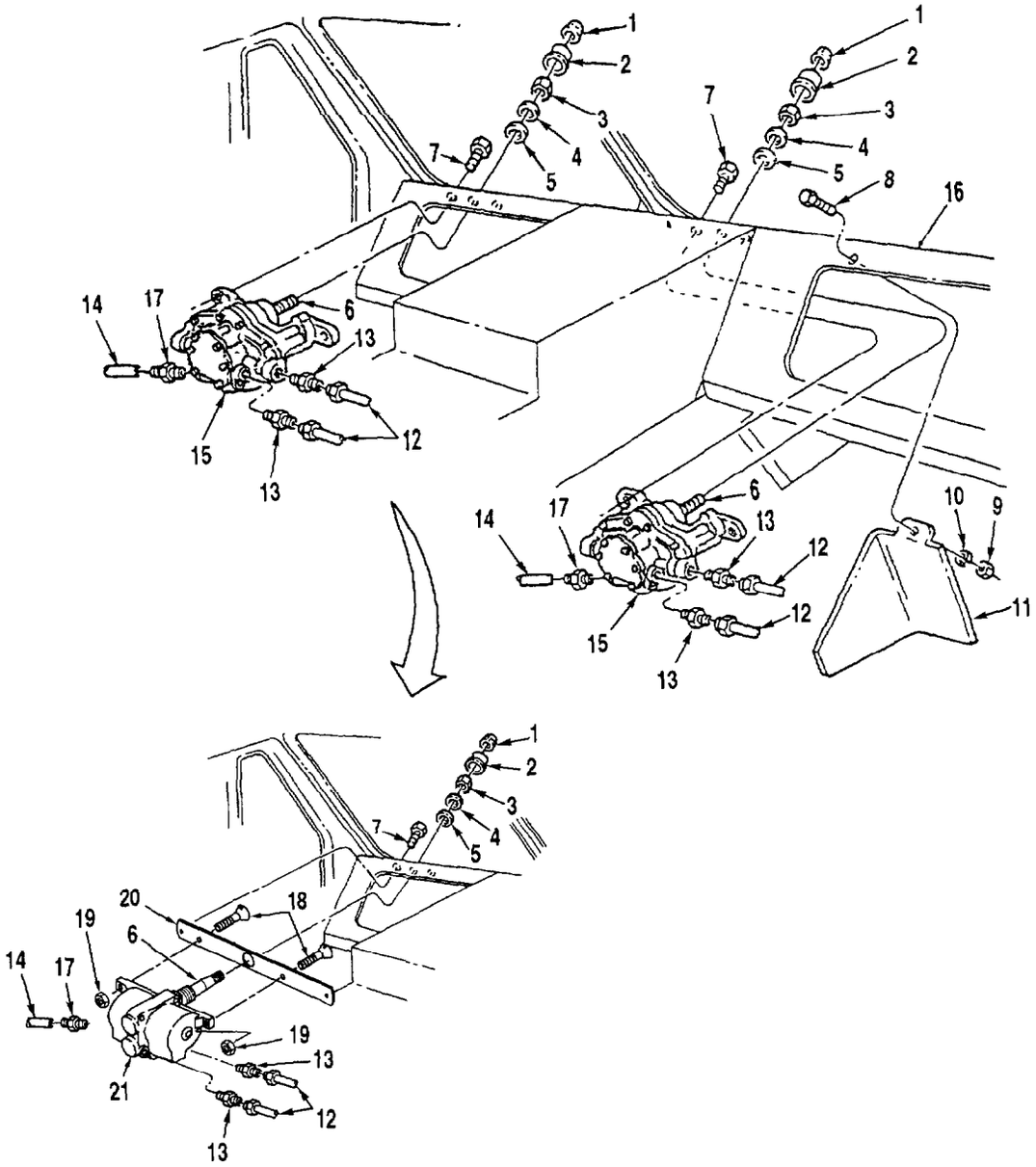

1. Knurled Driver
2. Rubber Shield
3. Nut
4. Washer
5. Seal Washer
6. Windshield Wiper Motor Shaft
7. Capscrew (2)
8. Capscrew
9. Nut
10. Lockwasher
11. Defroster Duct Guard
12. Air Line (2)
13. Straight Fitting (2)
14. Hose
15. Windshield Wiper Motor
16. Dash Panel
17. Fitting
18. Screw (2)*
19. Locknut (2)*
20. Mounting Plate*
21. Windshield Wiper Motor*

* LVSA1 Series Vehicles Only

Figure 2-109. Windshield Wiper Motors

NOTE

Note locations of fittings on windshield wiper motor to ensure proper installation.

f. Remove two straight fittings (13) and fitting (17) from windshield wiper motor (15).

2-95. HAND CONTROL VALVE

WARNING

Air lines under pressure will move violently when removed. To prevent personal injury, drain all air pressure from system before removing pressurized components.

NOTE

Tag all air lines before removal to ensure proper installation.

a. Remove two air lines (1 and 2, Figure 2-110) from straight fitting (5) and 45° elbow (11) respectively.

b. Remove stop light switch (4) from tee fitting (10). Refer to paragraph 2-47 for stop light switch removal.

c. Remove four locknuts (6) from screws (7). Discard locknuts (6).

d. Remove four screws (7) from hand control valve (3) and panel (8).

e. Remove hand control valve (3) from panel (8).

f. Remove straight fitting (5) from 90° elbow (9).

g. Remove 90° elbow (9) from hand control valve (3).

h. Remove 45° elbow (11) from tee fitting (10).

NOTE

Air line fittings for the LVSA1 hand control valve have changed from a nipple and tee to street tee. When repairing a non-A1 vehicle, use the new style fittings to replace the old style fittings. Refer to TM 9-2320-297-24P for correct parts identification.

i. Deleted.

j. Remove tee fitting (10) from 90° elbow (13).

k. Remove 90° elbow (13) from hand control valve (3).

2-96. WINDSHIELD WIPER CONTROL VALVES

WARNING

Air lines under pressure will move violently when removed. To prevent personal injury, drain all air pressure from system before removing pressurized components

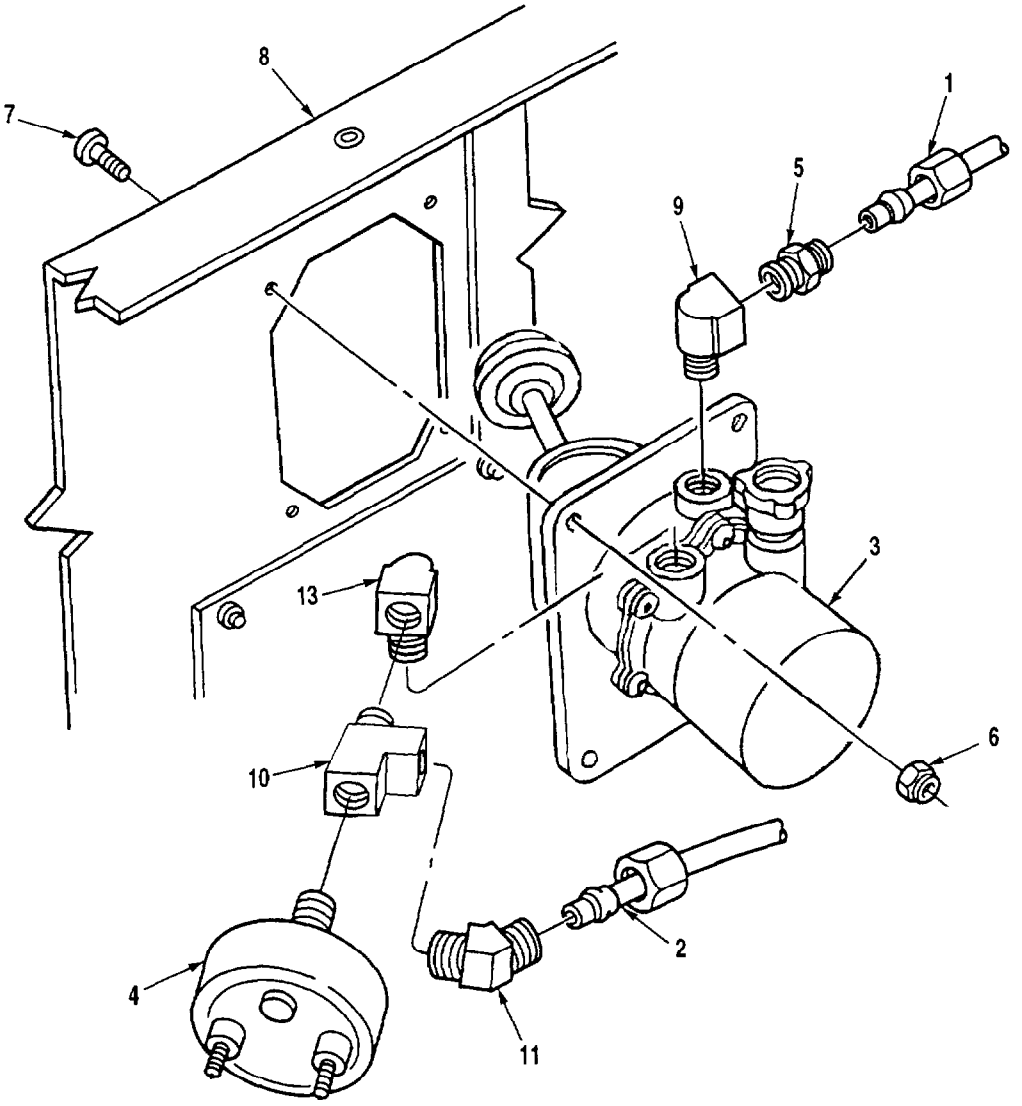

1. Air Line
2. Air Line
3 Hand Control Valve
4. Stop Light Switch
5. Straight Fitting
6. Locknut (4)
7. Screw (4)
8. Panel
9. 90° Elbow
10. Tee Fitting
11. 45° Elbow
12. Deleted
13. 90° Elbow

Figure 2-110. Hand Control Valve

NOTE

Tag all air lines before removal to ensure proper installation.

This procedure works for both windshield wiper control valves.

Perform steps b.1, c.1, and d.1 on LVSA1 series vehicles only.

a. Remove three air lines (1, Figure 2-111) from three 90° elbows (2).

b. Remove setscrew (4) and knob (5) from windshield wiper control valve (3).

b.1. Remove knob (5.1).

c. Remove nut (6) and lockwasher (7) from windshield wiper control valve (3). Discard lockwasher (7).

c.1. Remove nut (6.1) and lockwasher (7.1) from windshield wiper control valve (3.1). Discard lockwasher (7.1)

d. Remove windshield wiper control valve (3) from panel (9).

d.1. Remove windshield wiper control valve (3.1) from panel (9).

e. Remove three 90° elbows (2) from windshield wiper control valve (3 or 3.1).

2-97. WINDSHIELD WASHER CONTROL VALVE

WARNING

Air lines under pressure will move violently when removed. To prevent personal injury, drain all air pressure from system before removing pressurized components.

NOTE

Tag air line before removal to ensure proper installation.

a. Remove air line (1, figure 2-112) from 90° elbow (5).

b. Remove spring clamp (3) and hose (4) from windshield washer control valve (2).

c. Remove setscrew (6) and knob (7) from windshield washer control valve (2).

NOTE

Perform step c.1 on LVSA1 series vehicles only.

c.1. Remove knob (7.1).

d. Remove nut (8) from windshield washer control valve (2).

e. Remove windshield washer control valve (2) from panel (10).

f. Remove 90° elbow (5) from windshield washer control valve (2).

2-98. MASTER LIGHT SWITCH

a. Remove three screws (1, Figure 2-113), lockwashers (2), levers (3), and washers (4) from master light switch (8). Discard lockwashers (2).

b. Remove cannon plug (5) from rear of master light switch (8).

c. Remove four locknuts (7) and screws (6) from panel (9) and master light switch (8). Discard locknuts (7).

d. Remove master light switch (8) from panel (9).

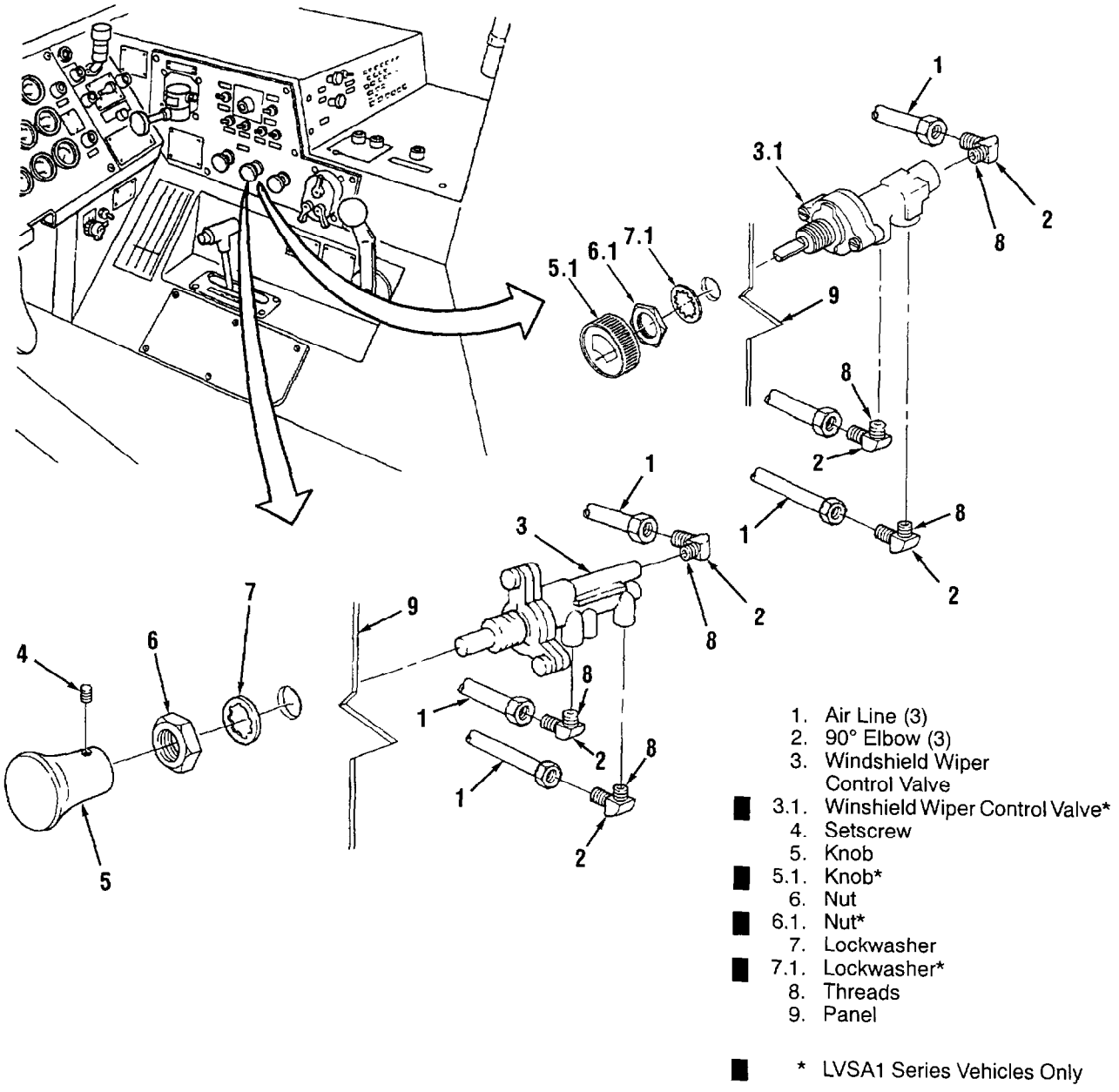

Figure 2-111. Windshield Wiper Control Valves

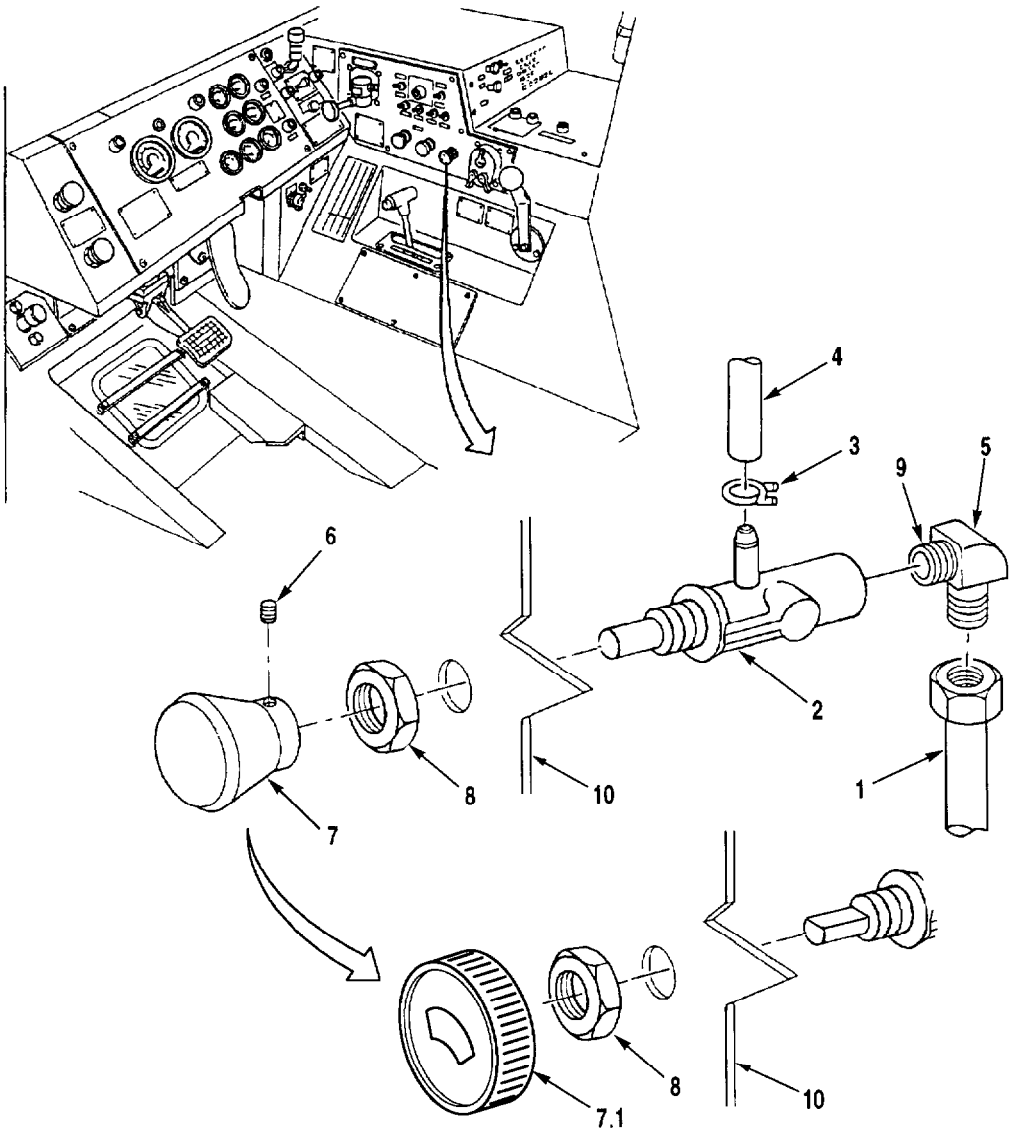

1. Air Line
2. Windshield Washer Control Valve
3. Spring Clamp
4. Hose
5. 90° Elbow
6. Setscrew
7. Knob
7.1. Knob*
8. Nut
9. Threads
10. Panel

* LVSA1 Series Vehicles Only

Figure 2-112. Windshield Washer Control Valve

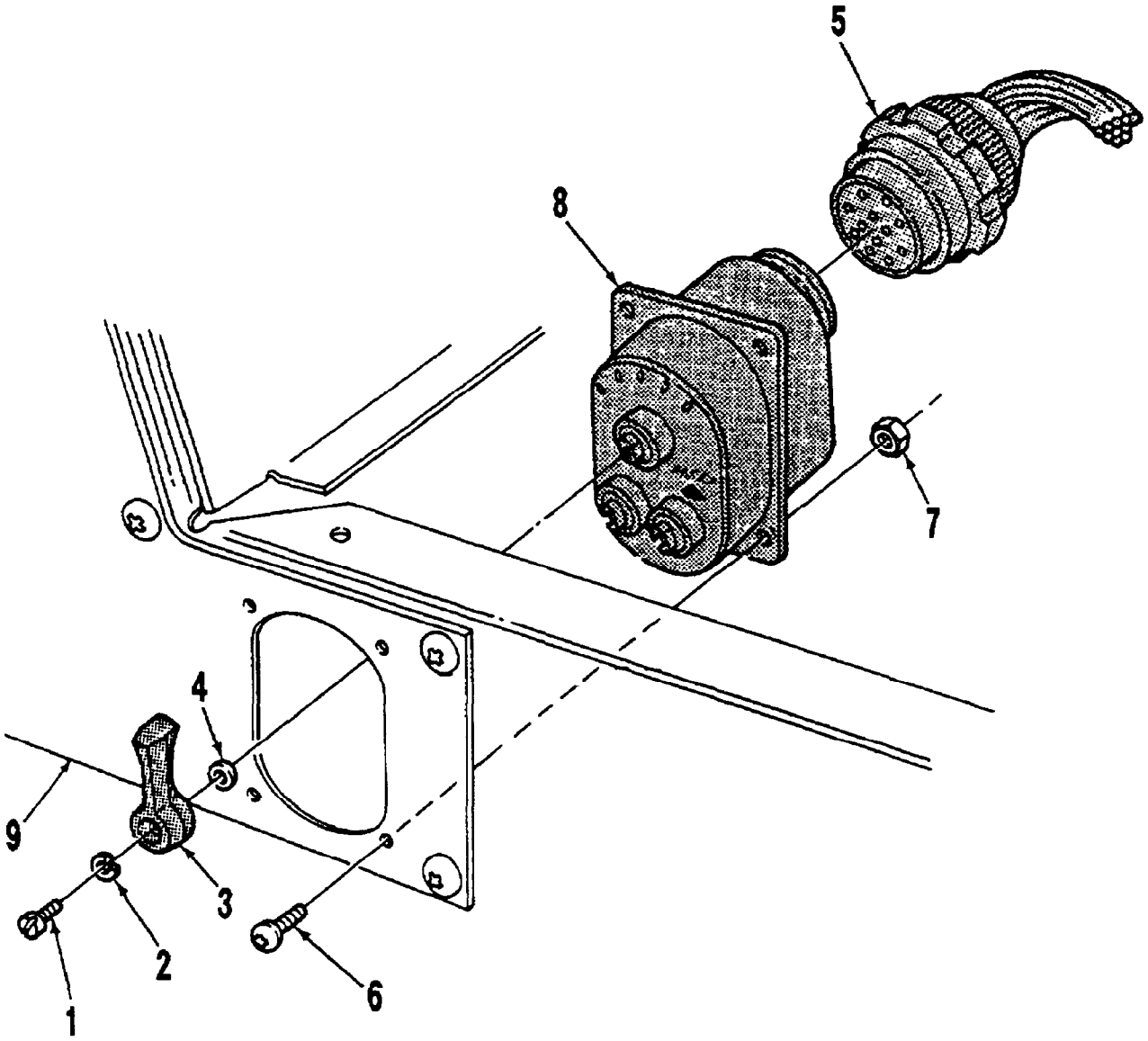

1. Screw (3)
2. Lockwasher (3)
3. Lever (3)
4. Washer (3)
5. Cannon Plug
6. Screw (4)
7. Locknut (4)
8. Master Light Switch
9. Panel

Figure 2-113. Master Light Switch

2-99. TRANSMISSION SHIFT CONTROL

NOTE

For this procedure, the transmission shift cable was removed previously. Refer to Paragraph 2-58.

a. Remove transmission shift control light socket (2, Figure 2-114), using access hole (1), from transmission shift control (3) by pulling transmission shift control light socket (2) down.

b. Remove bulb (4) by turning it counterclockwise and sliding it out of transmission shift control light socket (2).

c. Remove four screws with captive lockwashers (5) from transmission shift control (3).

d. Remove transmission shift control (3) from mounting surface (7).

2-100. TRANSFER CASE SHIFT LEVER

NOTE

For this procedure, the transmission case shift cable was removed previously. Refer to Paragraph 2-59.

a. Remove three nuts (1, Figure 2-115) and capscrews (2) from transfer case shift lever (3).

b. Tilt transfer case shift lever (3) outward and remove it from mounting surface (4).

c. Unscrew and remove transfer case shift lever knob (5) from transfer case shift lever (3).

2-101. HEATER ASSEMBLY

NOTE

For this procedure, heater hoses (1 and 2, Figure 2-116) and clamps (3) were removed previously. Refer to Paragraph 2-61.

a Remove retainer (4) and heater control cable (5) from control arm (6).

b Remove capscrew (7), lockwasher (8), and clamp (9) from bracket (10). Discard lockwasher (8).

c Remove nylon ties (11) and disconnect four defroster ducts (12) from heater assembly (13). Discard nylon ties (11).

d Remove six screws (14) and lockwashers (15) from bracket (16). Discard lockwashers (15).

e Disconnect plug (18).

f Remove heater assembly (13) from heater compartment (17).

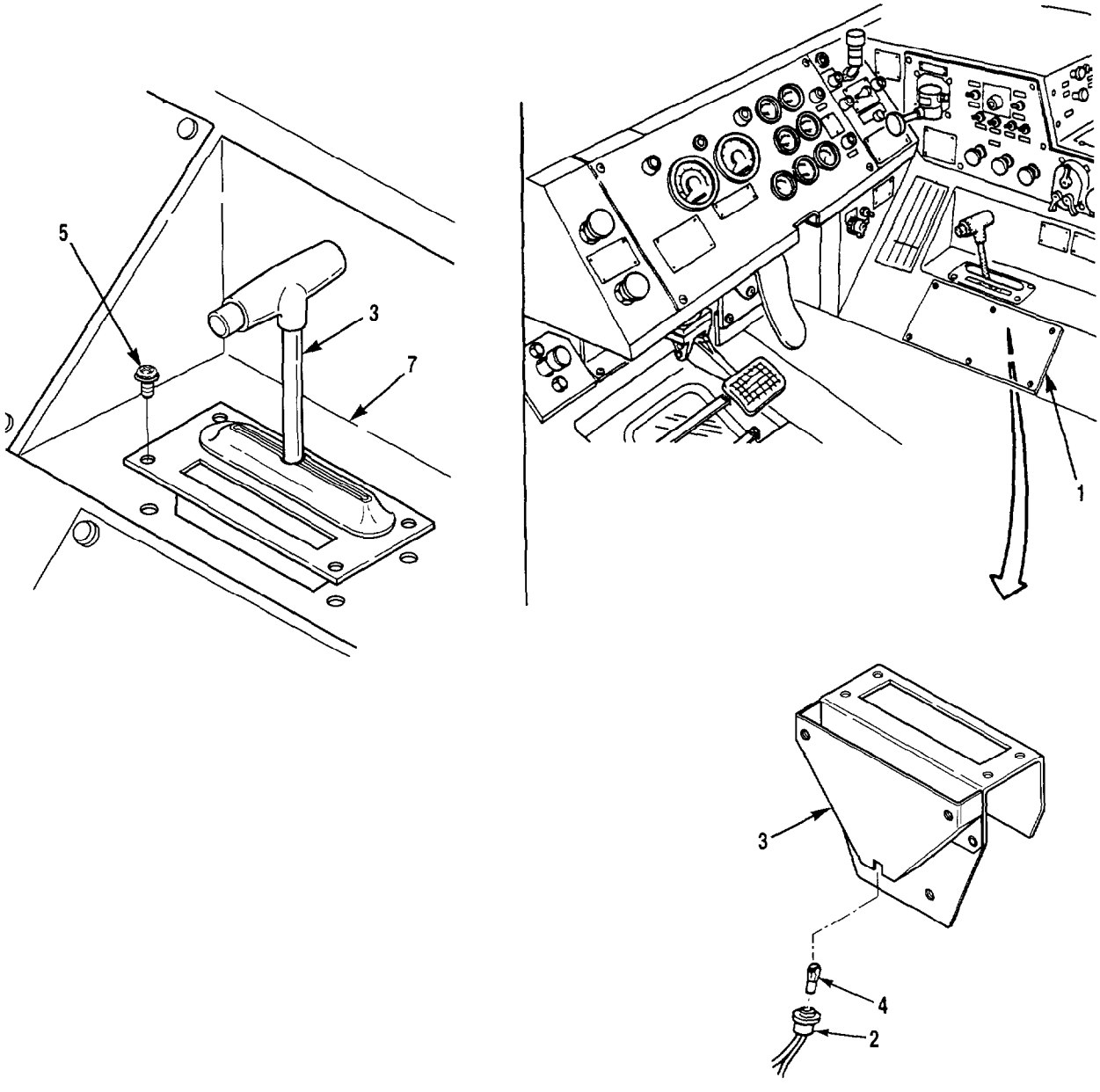

1. Access Hole
2. Transmission Shift Control Light Socket
3. Transmission Shift Control
4. Bulb
5. Screw with Captive Lockwasher (4)
6. Deleted
7. Mounting Surface

Figure 2-114. Transmission Shift Control

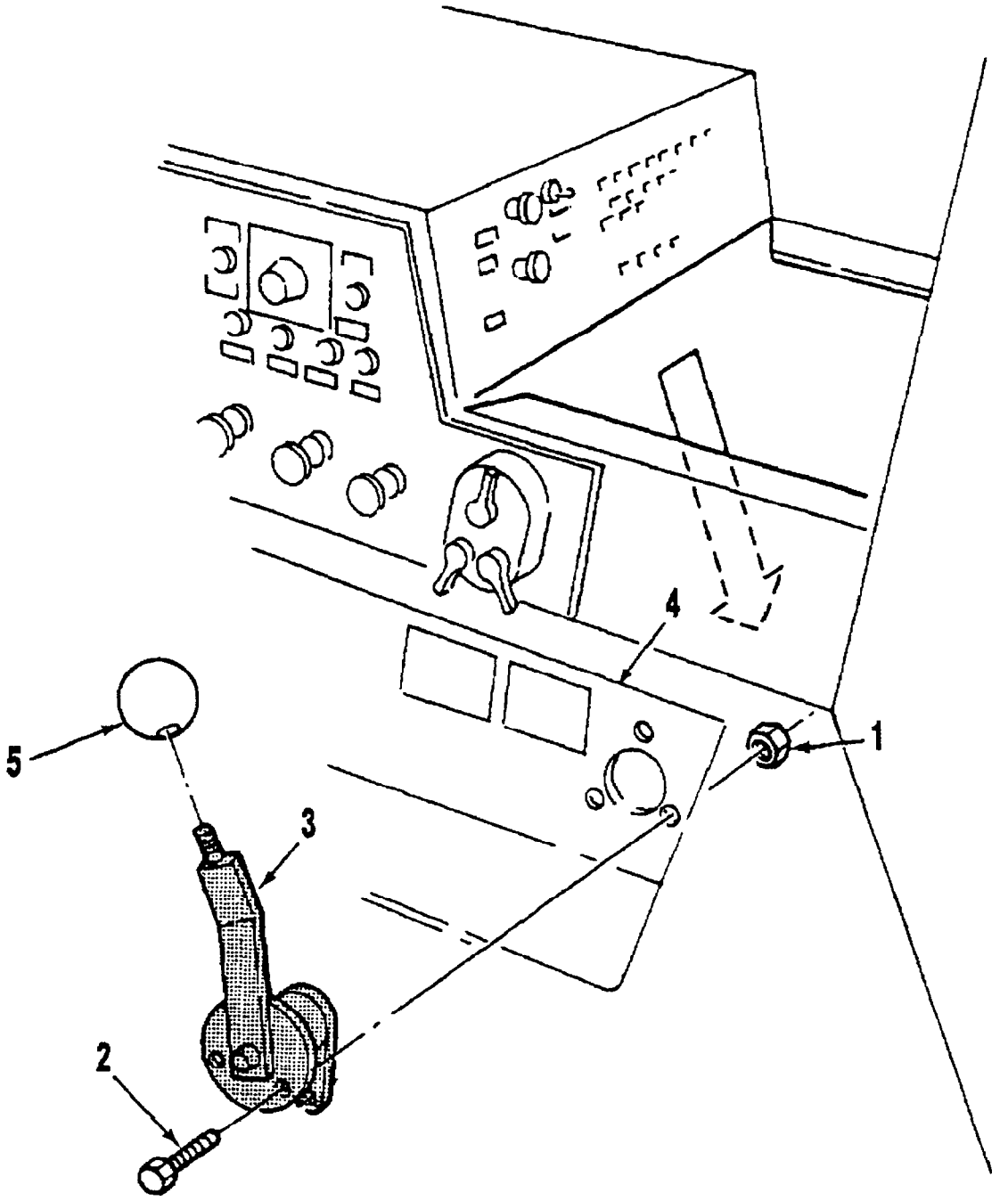

1. Nut (3)
2. Capscrew (3)
3. Transfer Case Shift Lever
4. Mounting Surface
5. Transfer Case Shift Lever Knob

Figure 2-115. Transfer Case Shift Lever

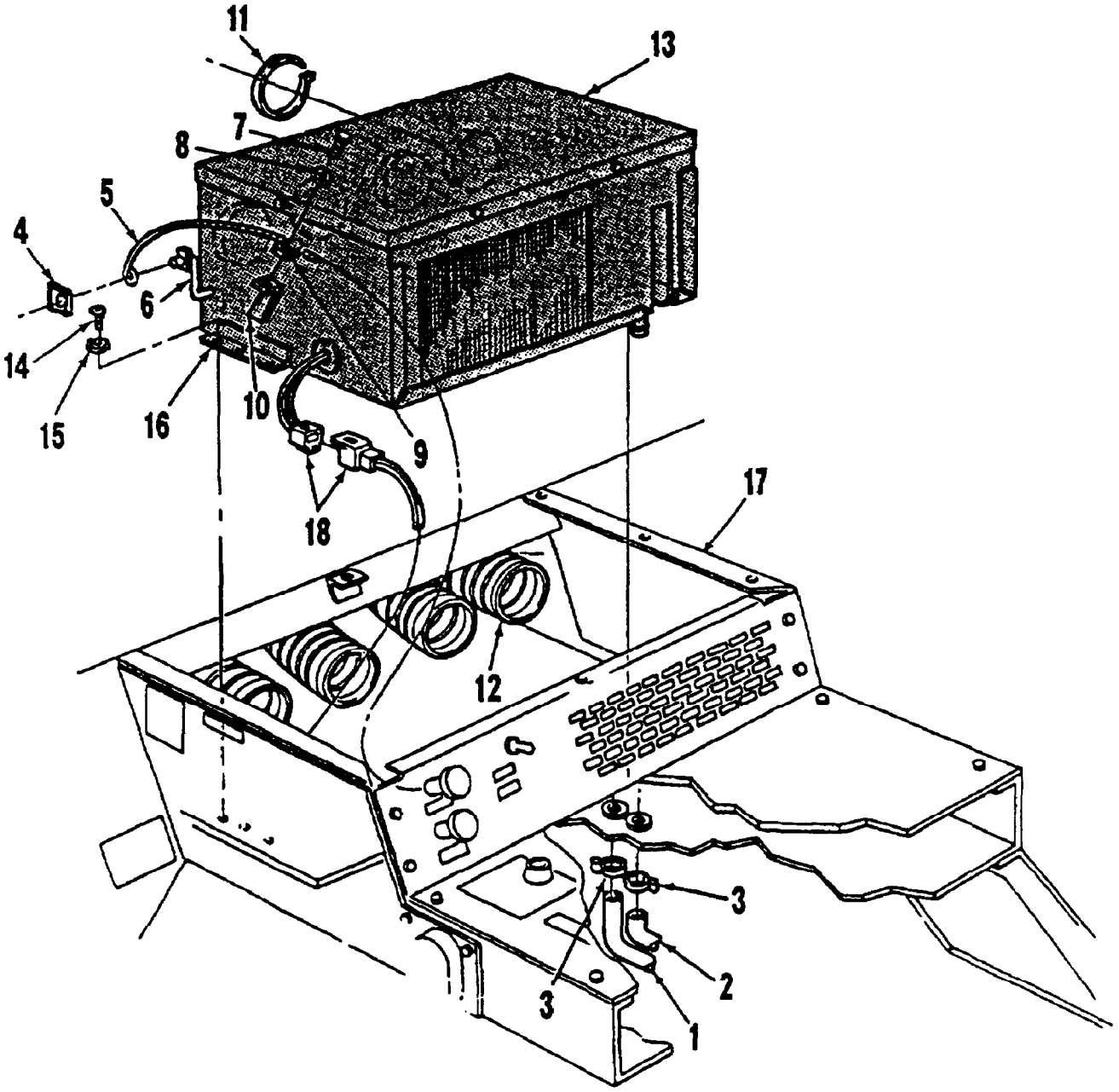

1. Heater Hose
2. Heater Hose
3. Clamp (2)
4. Retainer
5. Heater Control Cable
6. Control Arm
7. Capscrew
8. Lockwasher
9. Clamp
10. Bracket
11. Nylon Tie (4)
12. Defroster Duct (4)
13. Heater Assembly
14. Screw (6)
15. Lockwasher (6)
16. Bracket
17. Heater Compartment
18. Plug

Figure 2-116. Heater Assembly

2-102. HEATER BLOWER ASSEMBLY AND HEATER CORE

a. Heater Blower Assembly

(1) Remove six capscrews (1, Figure 2-117), lockwashers (2), and washers (3) from heater cover (4). Discard lockwashers (2).

(2) Remove heater cover (4) from heater housing (16).

(3) Remove two capscrews (5), lockwashers (6), and washers (7) from blower motor housing assembly (8). Discard lockwashers (6).

(4) Remove capscrew (9), lockwasher (10), washer (11), ground wire (12), and star washer (13) from blower motor housing (8). Discard lockwasher (10) and star washer (13).

(5) Remove tape (14) and unplug wire quick disconnect (15).

(6) Remove blower motor housing assembly (8) from heater housing (16).

b. Heater Core. Lift heater core (17) out of heater housing (16).

2-103. DEFROSTER DUCTS

NOTE

Heater assembly removed for this procedure. Refer to Paragraph 2-101.

Tag defroster ducts before removal to ensure proper installation.

a. Remove four nylon ties (5, Figure 2-118) from defroster ducts (1 through 4).

b. Remove four defroster ducts (1 through 4) from under dash panel (6).

2-104. SEAT FRAME ASSEMBLY

NOTE

Operator and passenger seat frames are not alike. However, they are removed using the same procedure.

The LVSA1 series vehicles have 3-point seat belts. Perform steps b.1, b.2 and d.1 when repairing LVSA1 series vehicles.

a. Slide seat (1, Figure 2-119, Sheet 1 of 2) to full forward position.

b. Disconnect seat belts (2) by removing two capscrews (3) and nuts (4) from each side of seat (1).

b.1. Remove locknut (4.1, Figure 2-119, Sheet 2 of 2), capscrew (4.2), washer (4.3), seat belt bracket (4.4) and tether bracket (4.5) from seat assembly (4.6). Discard locknut (4.1).

NOTE

Bushing may fall from seat assembly during removal.

b.2. Remove locknut (4.7), capscrew (4.8), washers (4.9), seat belt (4.10) and tether bracket (4.11) from seat assembly (4.6). Discard locknut (4.7).

c. Remove two nuts (5, Figure 2-119, Sheet 1 of 2) from each side of seat frame (6).

d. Remove seat frame (6) from seat mount (7).

d.1. Remove stop bracket (7.1) on drivers side of seat frame (6).

e. Remove four nuts (8), capscrews (9), washers (10), and seat mount (7) from cab floor (11).

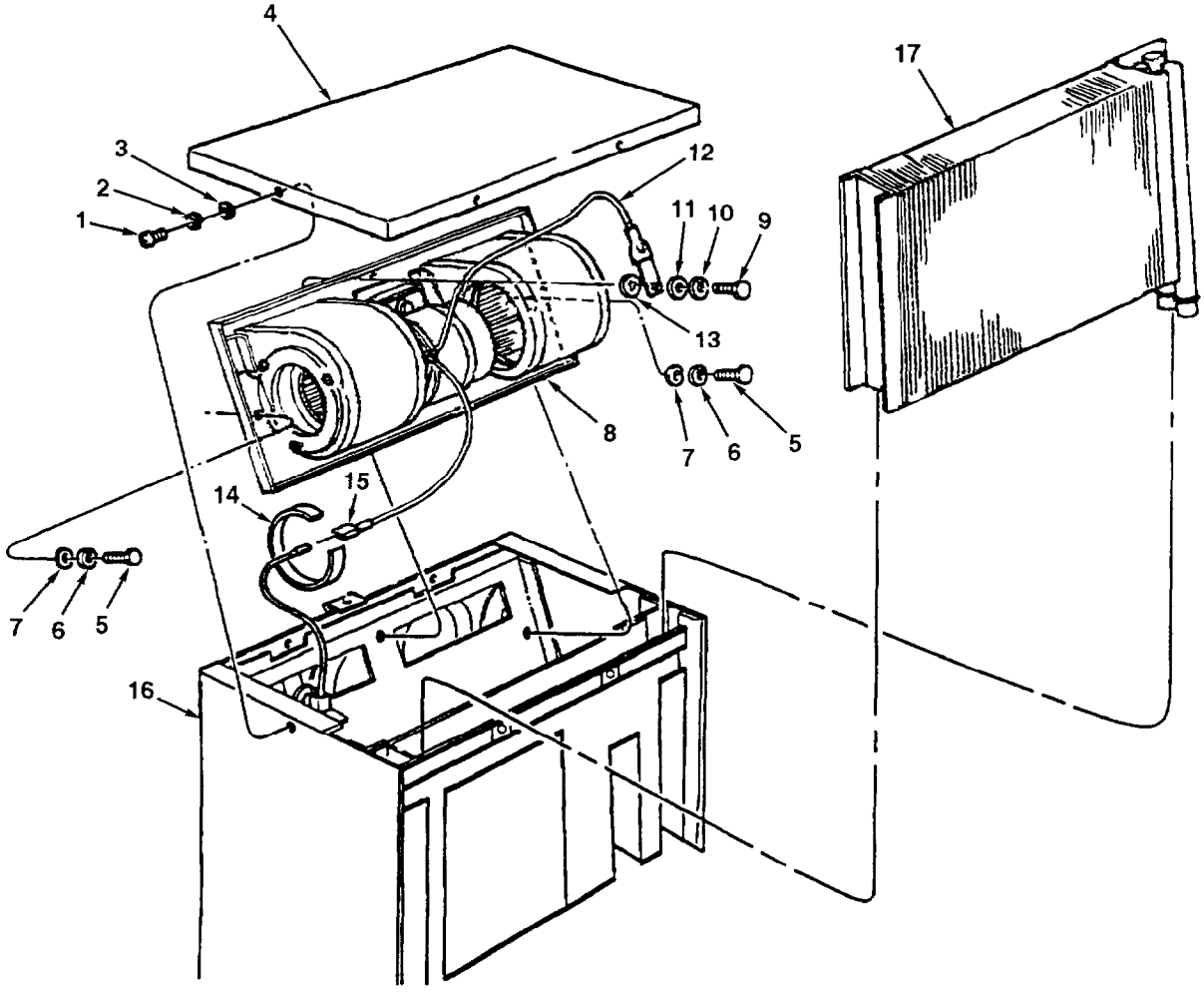

1. Capscrew (6)	7. Washer (2)	12. Ground Wire
2. Lockwasher (6)	8. Blower Motor Housing Assembly	13. Star Washer
3. Washer (6)	9. Capscrew	14. Tape
4. Heater Cover	10. Lockwasher	15. Wire Quick Disconnect
5. Capscrew (2)	11. Washer	16. Heater Housing
6. Lockwasher (2)		17. Heater Core

Figure 2-117. Heater Blower Assembly and Heater Core

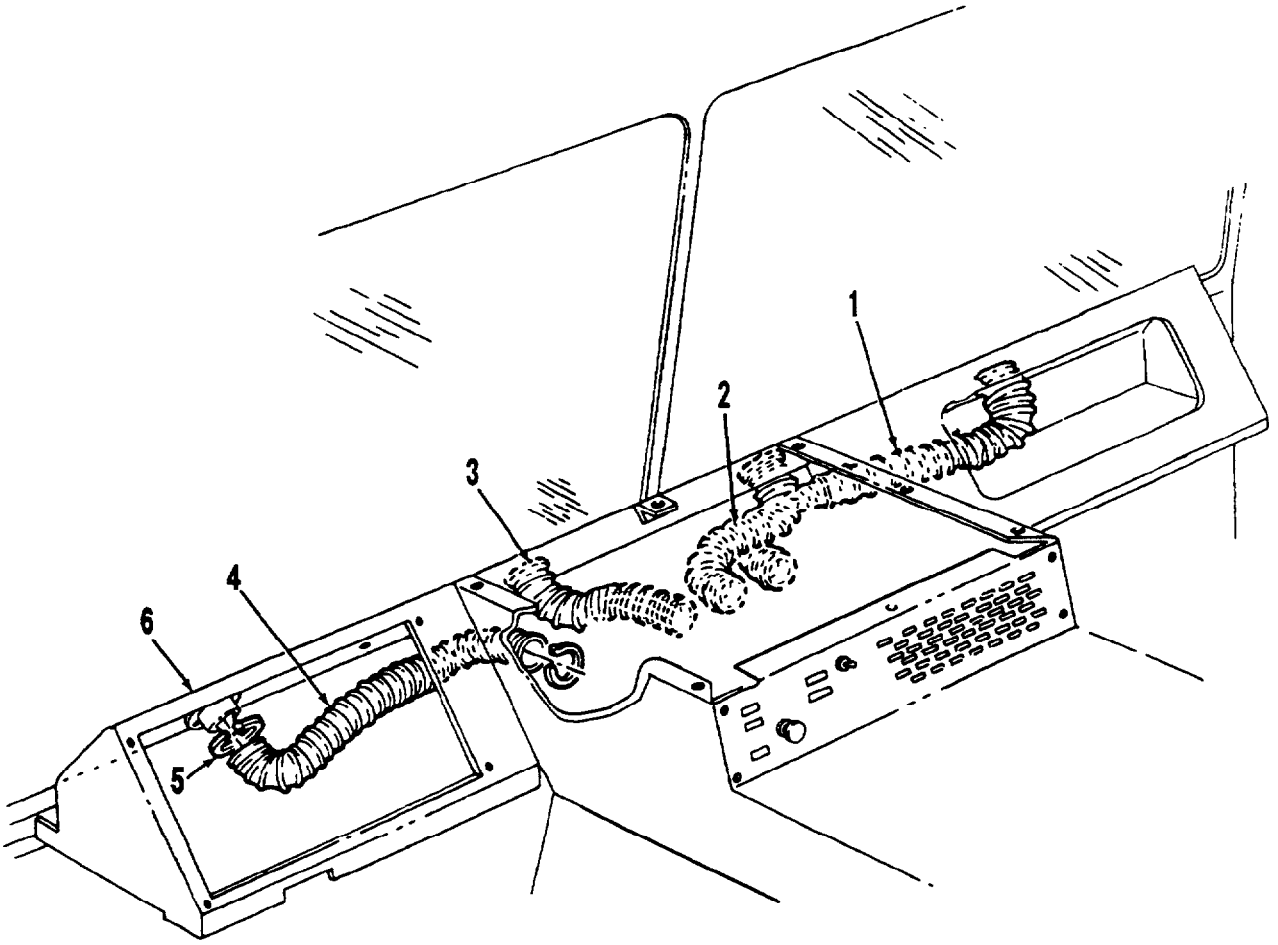

1. Defroster Duct
2. Defroster Duct
3. Defroster Duct
4. Defroster Duct
5. Nylon Ties (4)
6. Dash Panel

Figure 2-118. Defroster Ducts

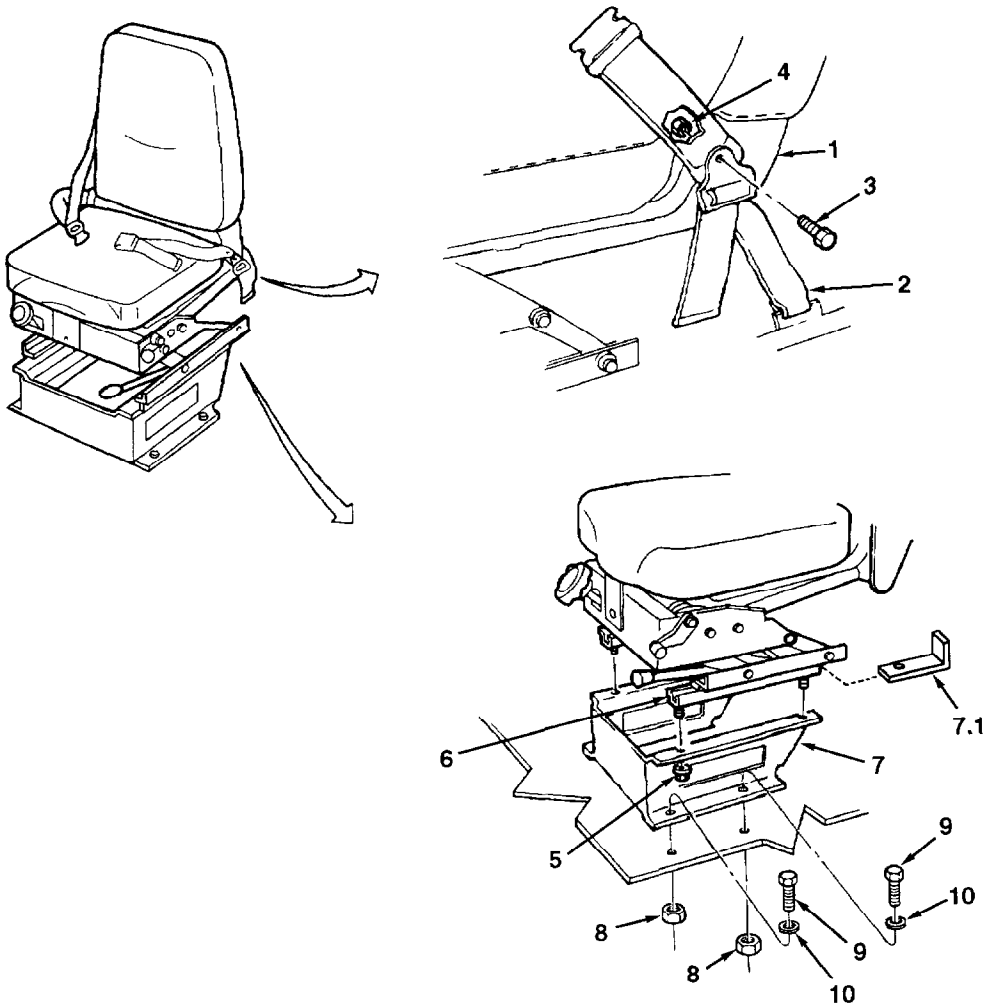

1. Seat
2. Seat Belt
3. Capscrew (2)
4. Nut (2)
5. Nut (4)
6. Seat Frame
7. Seat Mount
7.1. Stop Bracket*
8. Nut (4)
9. Capscrew (4)
10. Washer (4)
11. Cab Floor

* LVSA1 Series Vehicles Only

Figure 2-119. Seat Frame Assembly (Sheet 1 of 2)

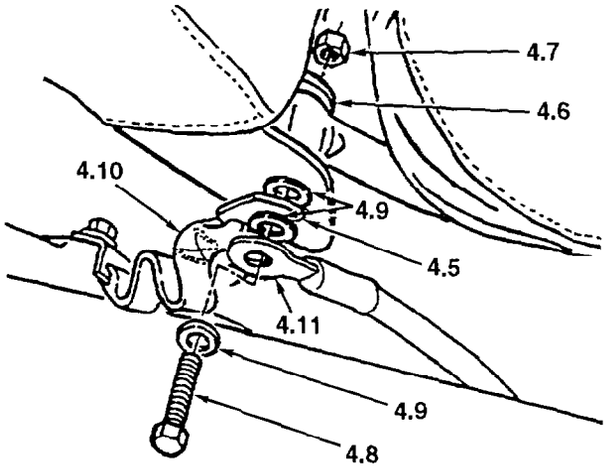

RIGHT SIDE OF SEAT

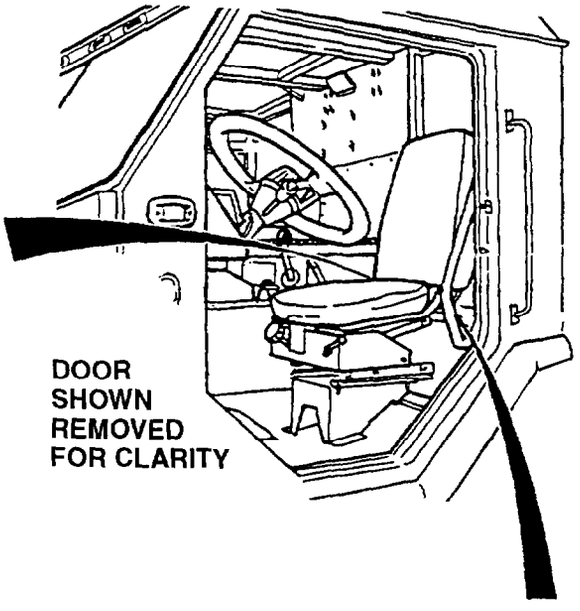

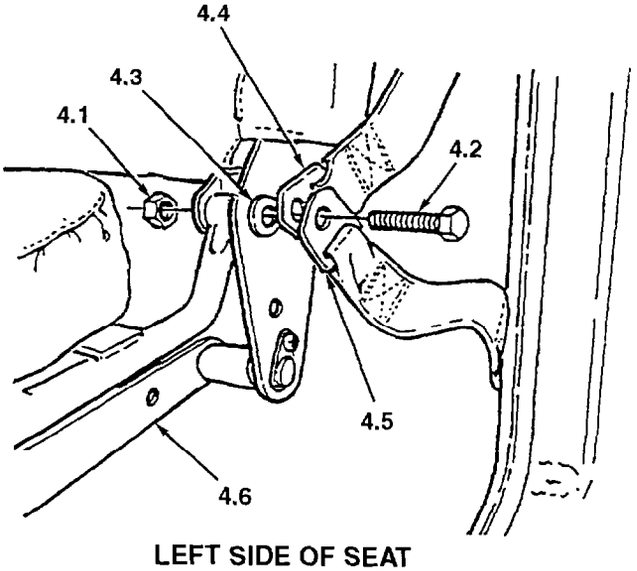

LEFT SIDE OF SEAT

4.1. Locknut*
4.2. Capscrew*
4.3. Washer*
4.4. Seat Belt Bracket*
4.5. Tether Bracket*
4.6. Seat Assembly*
4.7. Locknut*
4.8. Capscrew*
4.9. Washer (2)*
4.10. Seat Belt*
4.11. Tether Bracket*

* LVSA1 Series Vehicles Only

Figure 2-119. Seat Frame Assembly (Sheet 2 of 2)

2-105. SEAT BELTS

NOTE

This procedure works for both driver and passenger seat belts.

Nut (1, Figure 2-120), capscrew (2), and seat belt (3) removed previously. Refer to Paragraph 2-104.

a. Remove capscrew (6), lockwasher (7), and cab-end of seat belt (4) from cab (5). Discard lockwasher (7).

NOTE

Nut (8), capscrew (9), and lower end of seat belt (10) removed previously. Refer to Paragraph 2-104.

b. Remove capscrew (12), lockwasher (13), and cab-end of seat belt (11) from cab (5). Discard lockwasher (13).

c. Remove nut (14), upper end of seat belt (10), nut (15), and washer (16) from stud (17).

d. Remove seat belts (3, 4, 10, and 11) from vehicle.

2-105.1 SEAT BELT (LVSA1 SERIES VEHICLES ONLY)

NOTE

Both seat belts are removed the same way. Left seat shown.

a. Remove capscrew (1, Figure 2-120.1), lockwasher (2) and angled bracket (3) from cab assembly (4). Discard lockwasher (2).

b. Remove locknut (5), capscrew (6), two straps (7) and washer (8) from seat assembly (9). Discard locknut (5).

c. Remove capscrew (10), lockwasher (11) and angled bracket (12) from cab assembly (4). Discard lockwasher (11).

d. Remove locknut (13), capscrew (14), hardened washer (15), seat belt bracket (16), hardened washer (17), tether bracket (18) and washer (19) from seat assembly (9). Discard locknut (13).

e. Remove locknut (20), washer (21), D-ring (22), spacer (23), comfort latch (24), two hardened washers (25) and capscrew (26) from cab assembly (4). Discard locknut (20).

f. Remove locknut (27), capscrew (28), washer (29), L-bracket (30) and retractor unit (31) from cab assembly (4). Discard locknut (27).

2-106. CAB WINDOWS

a. Windshield

CAUTION

Use care not to damage weather stripping with flat-edged tool when pulling seam outward.

NOTE

It may be necessary to apply a soapy solution to weather stripping while prying.

(1) Windshield weather stripping (1, Figure 2-121) must be pried at seam (2) with a flat-edged tool to separate outside and inside halves (3 and 4).

(2) Outside half (3) of windshield weather stripping (1) must be pried up and outward from under inside half (4).

(3) Fold inside half (4) of windshield weather stripping (1) outward to show windshield (5).

(4) From inside cab, apply even pressure to one corner of windshield (5) until it is loose from cab.

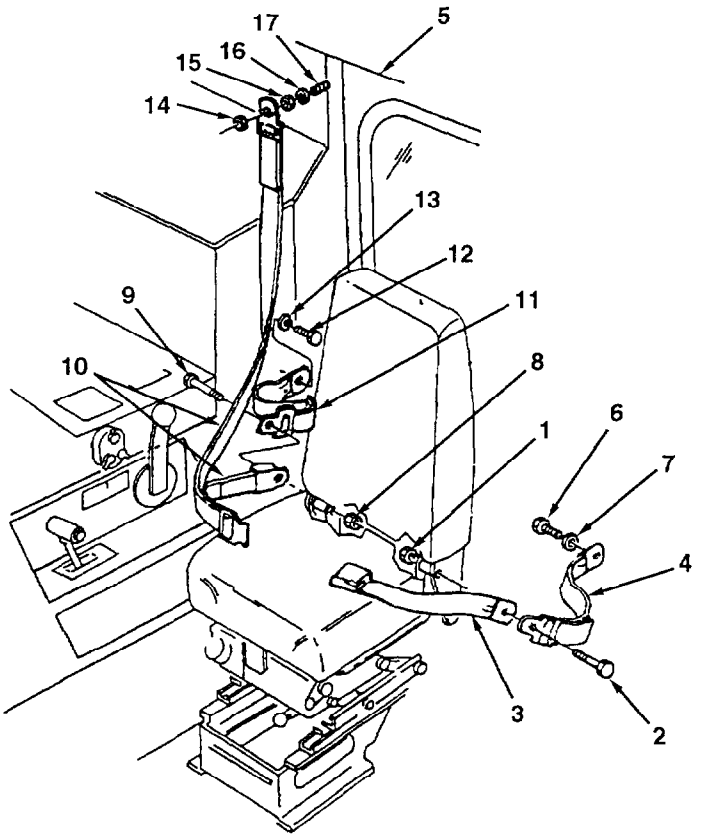

1. Nut
2. Capscrew
3. Seat Belt
4. Seat Belt
5. Cab
6. Capscrew
7. Lockwasher
8. Nut
9. Capscrew
10. Seat Belt
11. Seat Belt
12. Capscrew
13. Lockwasher
14. Nut
15. Nut
16. Washer
17. Stud

Figure 2-120. Seat Belts

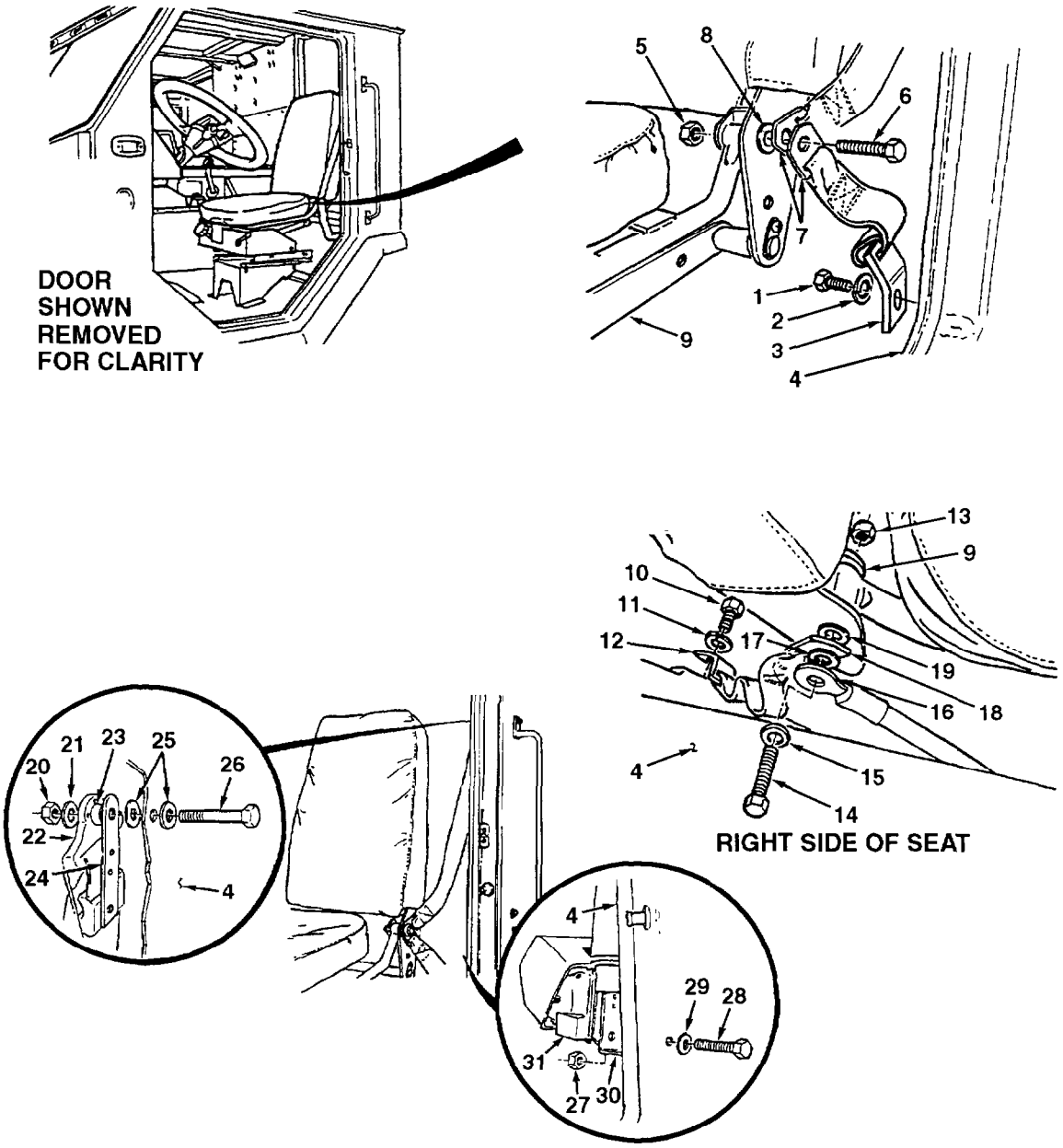

1. Capscrew
2. Lockwasher
3. Angled Bracket
4. Cab Assembly
5. Locknut
6. Capscrew
7. Strap (2)
8. Washer
9. Seat Assembly
10. Capscrew
11. Lockwasher
12. Angled Bracket
13. Locknut
14. Capscrew
15. Hardened Washer
16. Seat Belt Bracket
17. Hardened Washer
18. Tether Bracket
19. Washer
20. Locknut
21. Washer
22. D-ring
23. Spacer
24. Comfort Latch
25. Hardened Washer (2)
26. Capscrew
27. Locknut
28. Capscrew
29. Washer
30. L-bracket
31. Retractor Unit

Figure 2-120.1. Seat Belts
(LVSA1 Series Vehicles Only)

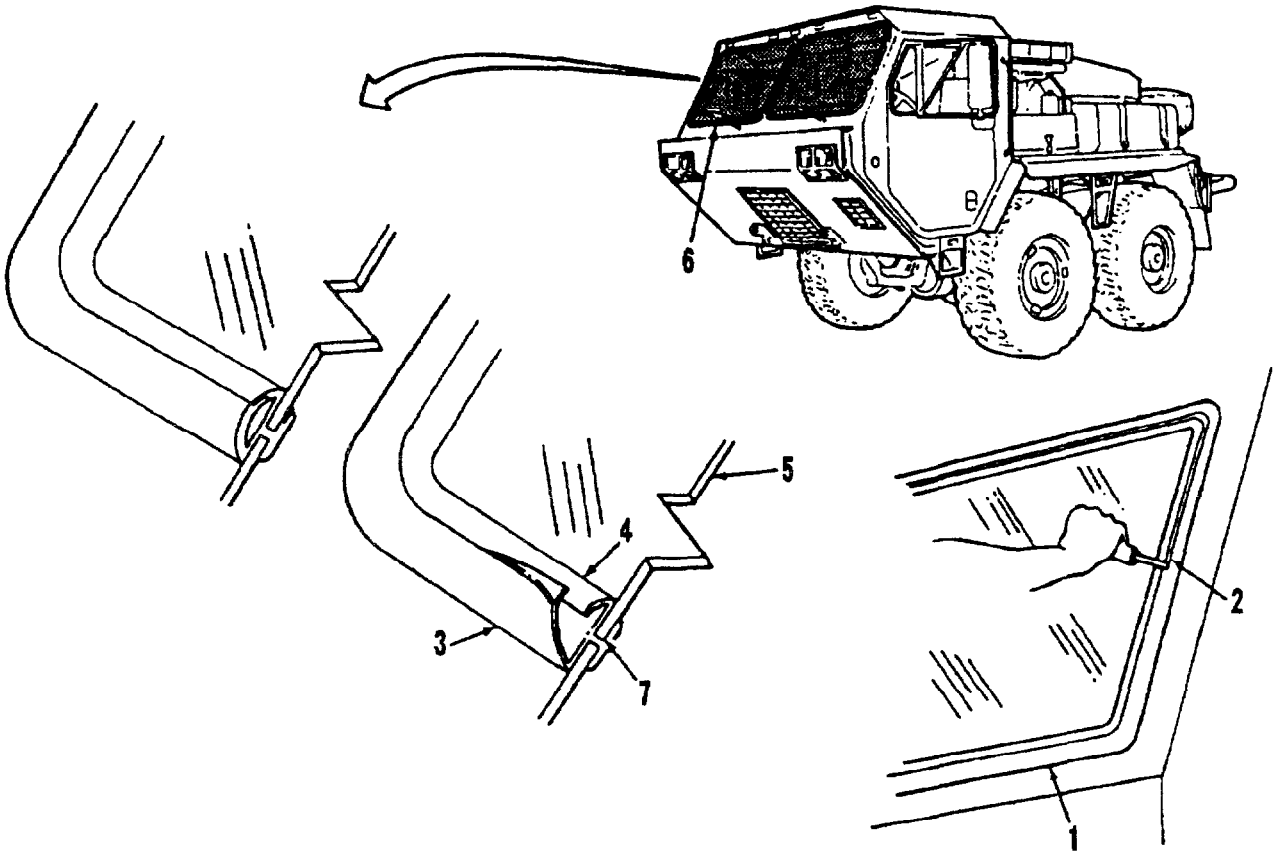

1. Windshield Weather Stripping
2. Seam
3. Outside Half
4. Inside Half
5. Windshield
6. Bottom Center of Windshield Frame
7. Weather Stripping End

Figure 2-121. Windshield

(5) From outside vehicle, get help to carefully work windshield (5) out of windshield weather stripping (1).

(6) Remove windshield weather stripping (1) from cab.

b. Rear Window and Peep Window Glass

NOTE

This procedure works for both rear and peep window glass.

Capscrew (1, Figure 2-122), washer (2), nut (3), and window guard (4) removed previously. Refer to Paragraph 2-5.

(1) Remove locking strip (5) from locking channel (8).

(2) Fold inside edge (6) of locking channel (8) out around entire window (7).

(3) Remove window (7) from locking channel (8).

(4) Remove locking channel (8) from cab (10).

2-107. WINDSHIELD WASHER RESERVOIR, HOSES, AND NOZZLES

NOTE

Tag all hoses before removal to ensure proper installation.

a. Slide spring clamps (1, Figure 2-123) back on hoses (2 and 3).

b. Remove hoses (2 and 3) from windshield washer reservoir (4).

c. Slide windshield washer reservoir (4) up and out of bracket (5).

d. Remove two nuts (7), lockwashers (8), capscrews (6), and bracket (5) from cab (23). Discard lockwashers (8).

NOTE

For this procedure, nut (11), lockwasher (10), capscrew (9), and defroster duct guard (12) were removed previously. Refer to Paragraph 2-64.

For this procedure, spring clamp (13), hose (3), and windshield washer control valve (14) were removed previously. Refer to Paragraph 2-97.

e. Remove hose (2) from tee fitting (15).

f. Remove hose (16) from tee fitting (15) and left nozzle (17).

g. Remove hose (18) from tee fitting (15) and right nozzle (19).

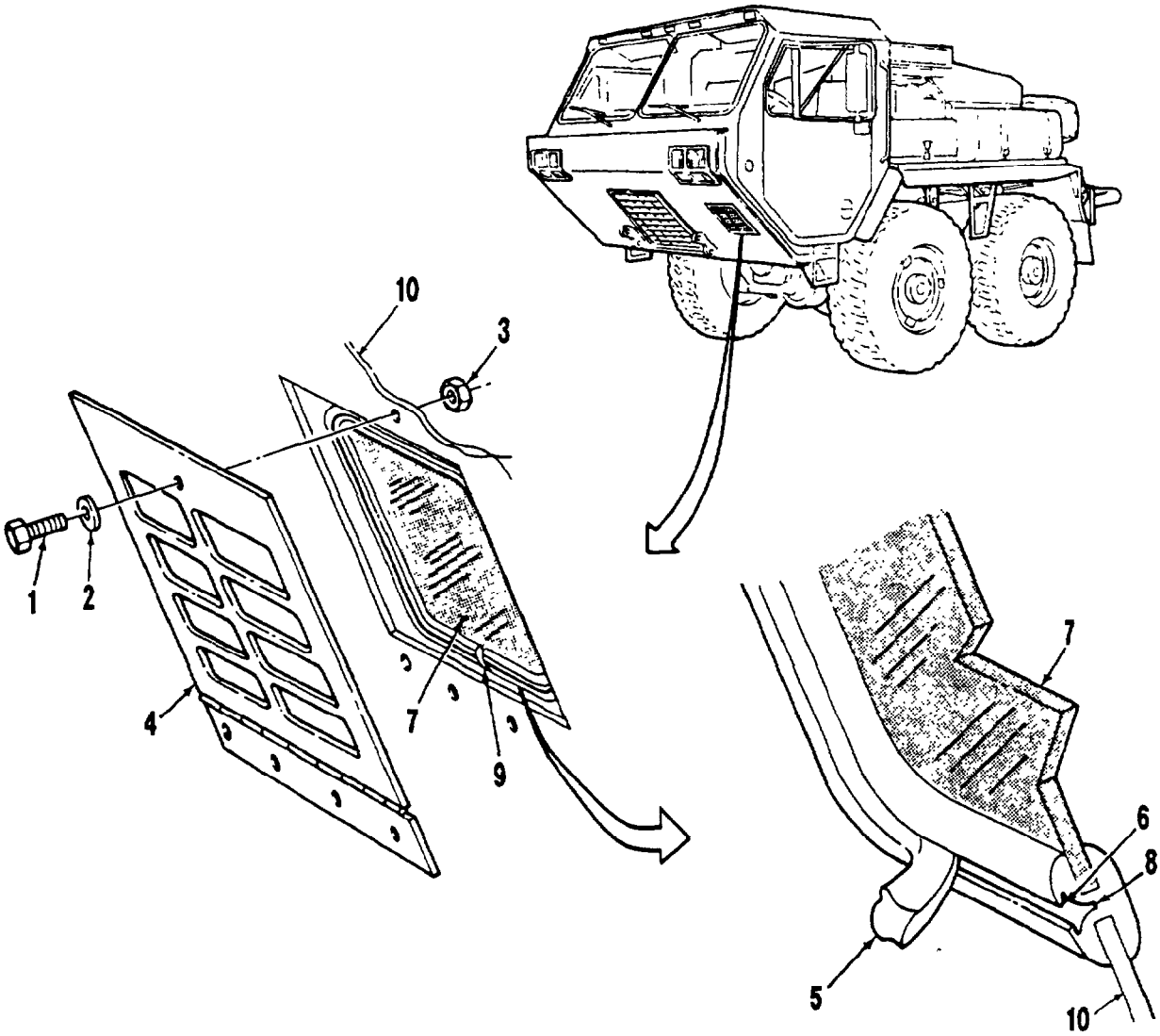

1. Capscrew
2. Washer
3. Nut
4. Window Guard
5. Locking Strip
6. Inside Edge
7. Window
8. Locking Channel
9. End of Locking Channel
10. Cab

Figure 2-122. Rear Window and Peep Window Glass

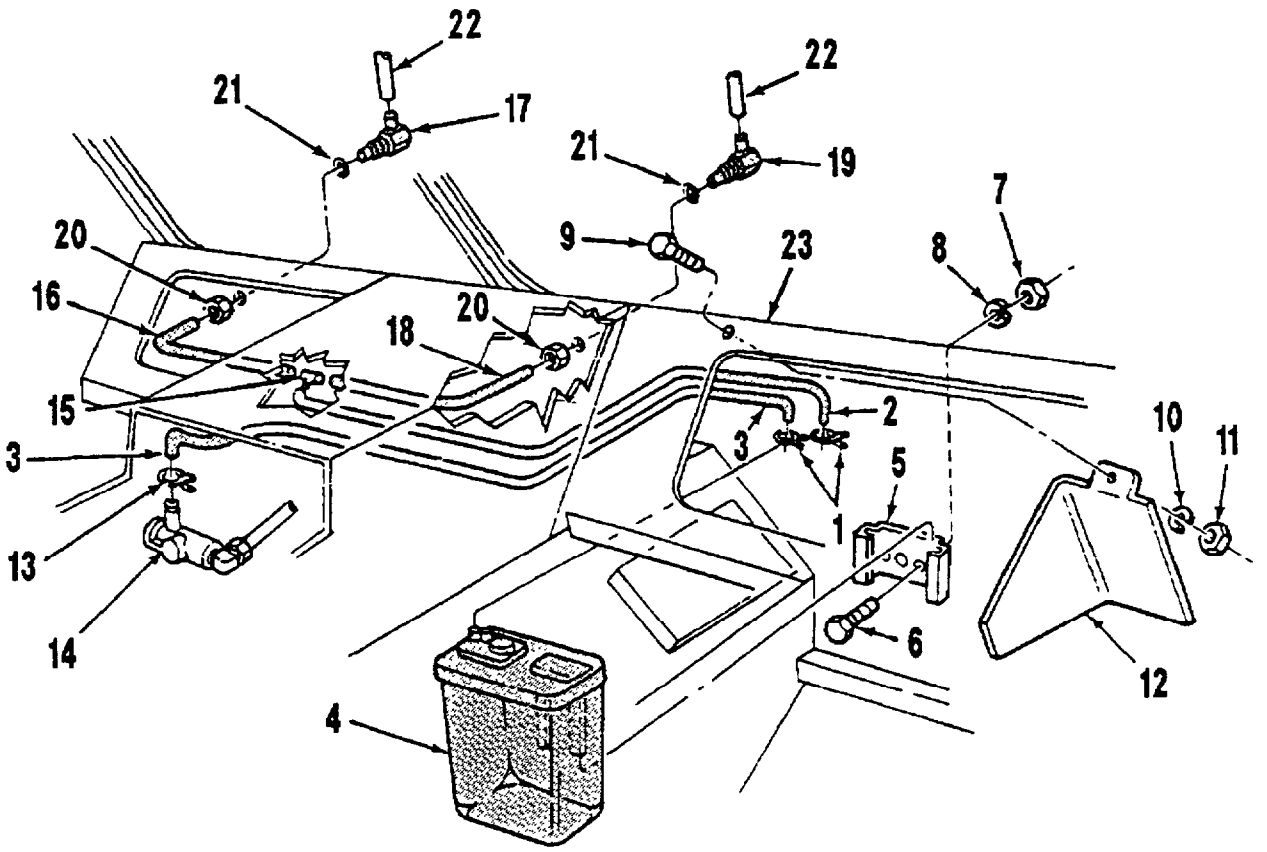

1. Spring Clamp (2)
2. Hose
3. Hose
4. Windshield Washer Reservoir
5. Bracket
6. Capscrew (2)
7. Nut (2)
8. Lockwasher (2)
9. Capscrew
10. Lockwasher
11. Nut
12. Defroster Duct Guard
13. Spring Clamp
14. Windshield Washer Control Valve
15. Tee Fitting
16. Hose
17. Left Nozzle
18. Hose
19. Right Nozzle
20. Nut (2)
21. Gasket (2)
22. Hose
23. Cab

Figure 2-123. Windshield Washer Reservoir, Hoses, and Nozzles

NOTE

This procedure works for both nozzles.

h. Remove nut (20) from right nozzle (19) while holding it in place.

i. Remove right nozzle (19) and gasket (21) from cab (23).

j. Remove hose (22) from right nozzle (19).

2-107.1. WINDSHIELD WASHER RESERVOIR, HOSES, AND NOZZLES (LVSA1 Vehicles Only)

a. Tag and remove hoses (1 and 2, Figure 2-123.1) from reservoir bottle (3).

b. Remove reservoir bottle (3).

c. Remove capscrew (4), lockwasher (5) and nut (6) from defroster duct cover (7). Discard lockwasher (5).

d. Remove defroster duct cover (7).

e. Remove capscrew (8), washer (9), and clamp (10) from main air manifold (11). Remove hoses (1 and 2) from clamp (10).

f. Remove two capscrews (12), lockwashers (13), washers (14), washer bottle bracket (15) and vertical washer bottle bracket (16). Discard lockwashers (13).

g. Remove three capscrews (17), locknuts (18), gasket strip (19) and vertical washer bottle bracket (16) from washer bottle bracket (15). Discard locknuts (18).

h. Remove spring clamp (20) and hose (1) from washer control valve (21).

i. Remove hose (2) from connection tee (22).

j. Remove hose (23) from connection tee (22) and left washer elbow (24).

k. Remove hose (25) from connection tee (22) and right washer elbow (26).

NOTE

Both right and left side washer elbows are removed in the same manner.

l. While assistant holds right washer elbow (26) in place, remove nut (27) from right washer elbow (26).

m. Remove right washer elbow (26) and gasket (28).

n. Remove hose (29) from right washer elbow (26).

2-108. CAB WIRING HARNESS. Refer to TM 2320-34/13 for removal of cab wiring harness.

2-109. HYDRAULIC PUMP PROPELLER SHAFT

a. Matchmark adapter plate (1, Figure 2-124) and drive plate (2) and hydraulic pump propeller shaft (5). Discard lockwashers (4).

b. Remove four capscrews (3) and lockwashers (4) from drive plate (2) and hydraulic pump propeller shaft (5). Discard lockwashers (4).

c. Slide hydraulic pump propeller shaft (5) and adapter plate (1) away from drive plate (2).

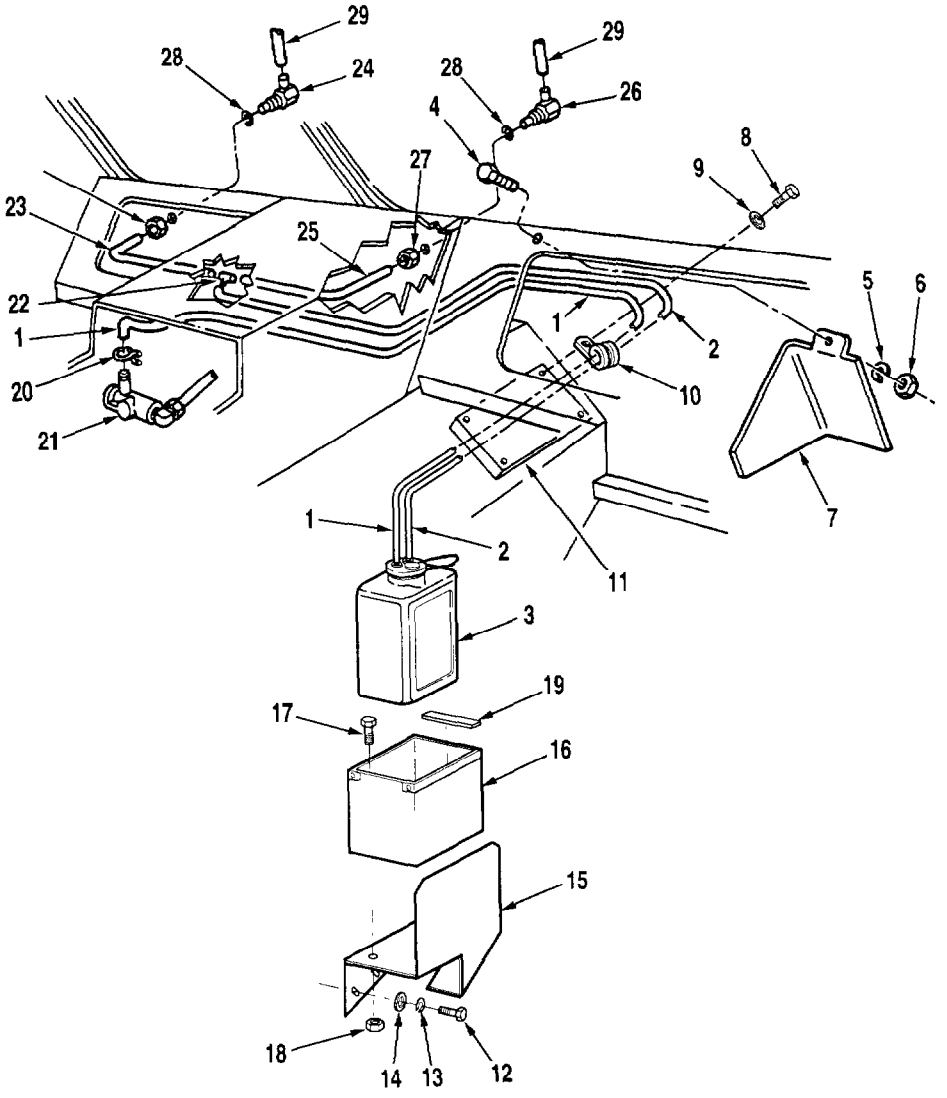

1. Hose
2. Hose
3. Reservoir
4. Capscrew
5. Lockwasher
6. Nut
7. Defroster Duct Cover
8. Capscrew
9. Washer
10. Clamp
11. Main Air Manifold
12. Capscrew (2)
13. Lockwasher (2)
14. Washer (2)
15. Washer Bottle Bracket
16. Vertical Washer Bottle Bracket
17. Capscrew (3)
18. Locknut (3)
19. Gasket Strip
20. Spring Clamp
21. Washer Control Valve
22. Connection Tee
23. Hose
24. Left Elbow
25. Hose
26. Right Elbow
27. Nut
28. Gasket
29. Hose

Figure 2-123.1. Windshield Washer Reservoir, Hoses, and Nozzles (LVSA1 Series Vehicles Only)

2-110. HYDRAULIC PUMP

WARNING

Hydraulics may be under pressure and can spurt out when lines are disconnected. To prevent personal injury, crack all lines slowly, keep face clear of lines, and wear safety glasses when working with hydraulic system.

The hydraulic pump weighs approximately 60 pounds and is located in an awkward spot. To prevent personal injury, or damage to pump, have assistant(s) help remove hydraulic pump from MK48.

NOTE

Tag all hydraulic lines before removal to ensure proper installation.

Place a container under hydraulic pump to catch any hydraulic fluid that may spill when hydraulic lines are disconnected.

a. Remove four capscrews (1, Figure 2-125), lockwashers (2), and two flange brackets (3) securing hydraulic supply line (4) to hydraulic pump (5). Discard lockwashers (2).

b. Remove four capscrews (6), lockwashers (7), and two flange brackets (8) securing hydraulic pressure line (9) to hydraulic pump (5). Discard lockwashers (7).

c. Remove four capscrews (10), lockwasher (11), and two flange brackets (12) securing second hydraulic pressure line (13) to hydraulic pump (5).

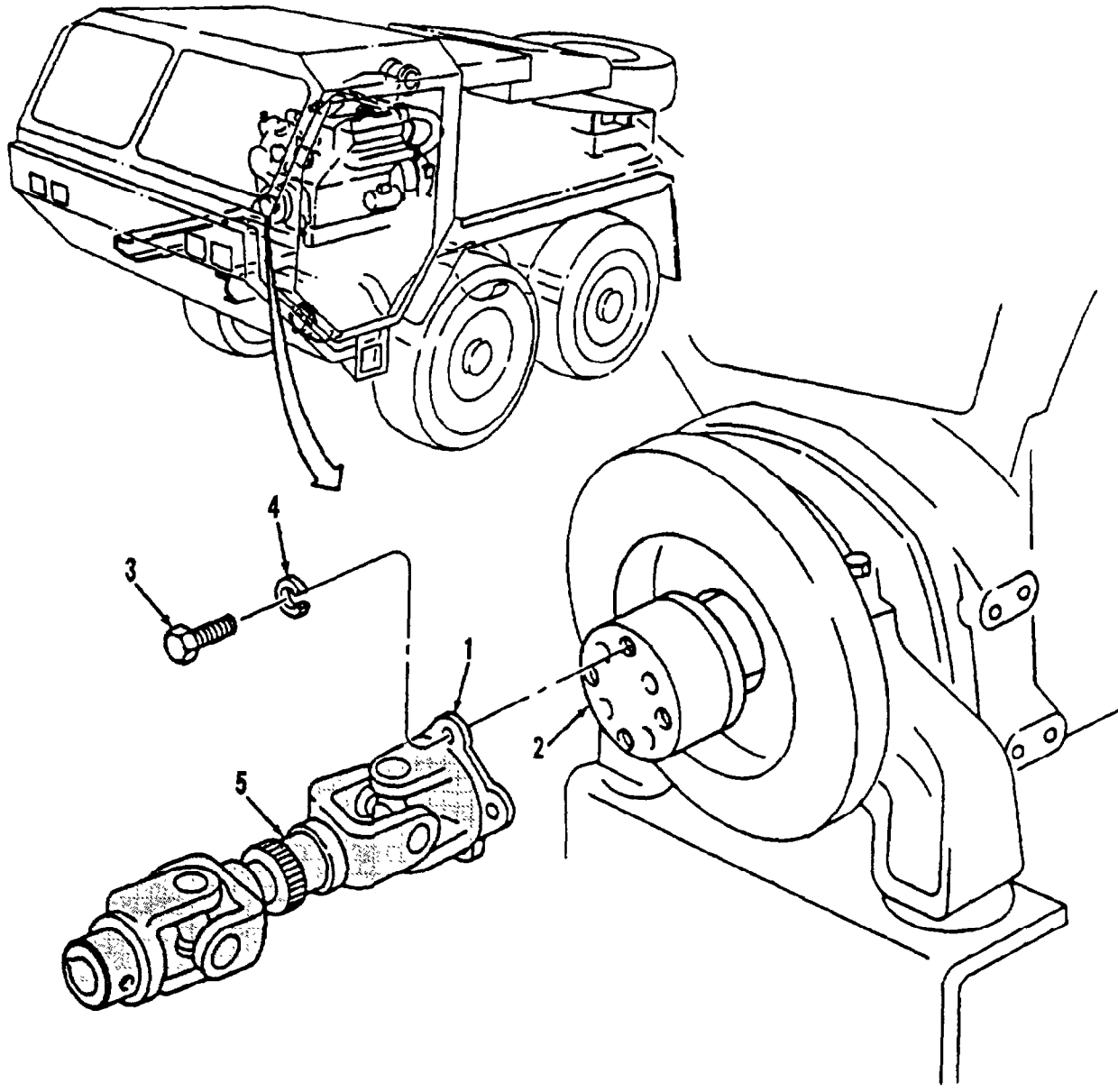

1. Adapter Plate
2. Drive Plate
3. Capscrew (4)
4. Lockwasher (4)
5. Hydraulic Pump Propeller Shaft

Figure 2-124. Hydraulic Pump Propeller Shaft

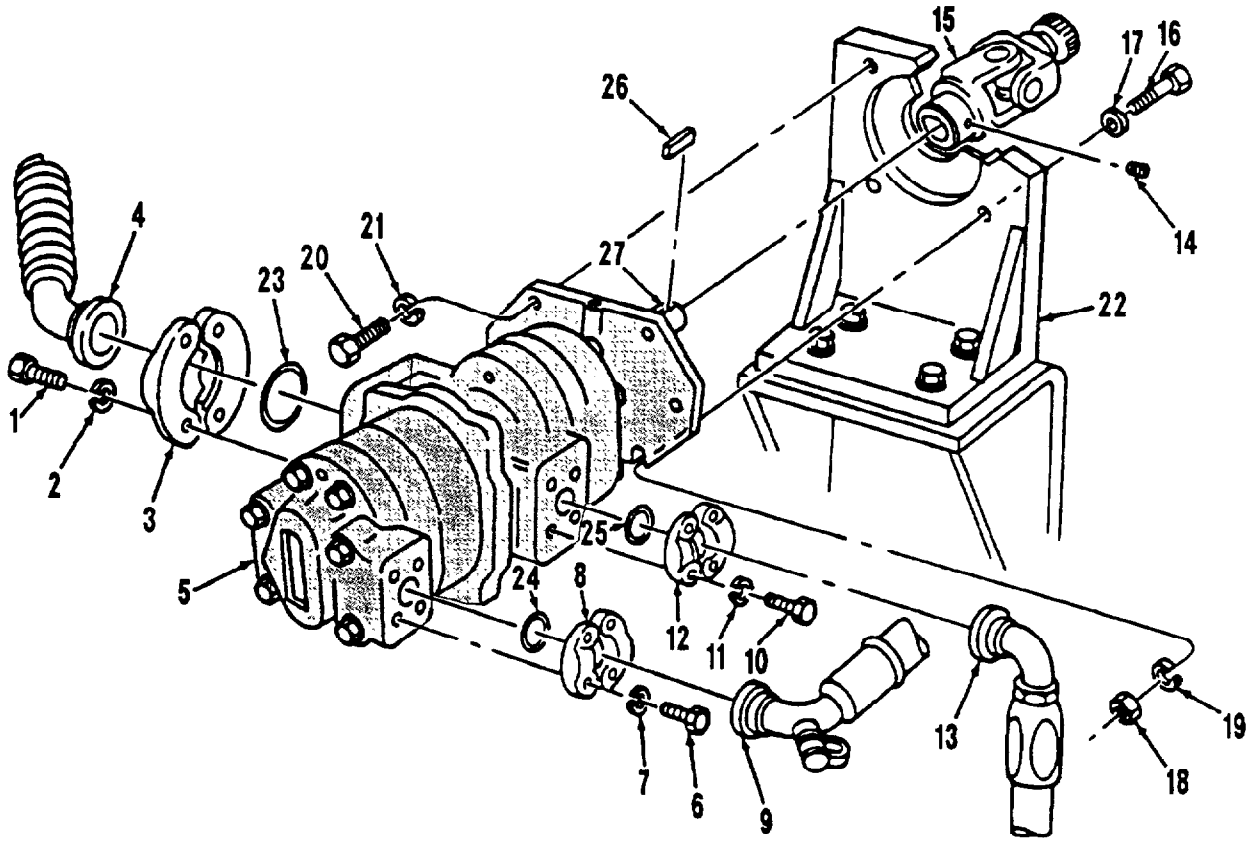

1. Capscrew (4)
2. Lockwasher (4)
3. Flange Bracket (2)
4. Hydraulic Supply Line
5. Hydraulic Pump
6. Capscrew (4)
7. Lockwasher (4)
8. Flange Bracket (2)
9. Hydraulic Pressure Line
10. Capscrew (4)
11. Lockwasher (4)
12. Flange Bracket (2)
13. Hydraulic Pressure Line
14. Setscrew
15. Hydraulic Pump Propeller Shaft End Yoke
16. Lower Capscrew (2)
17. Washer (2)
18. Nut (2)
19. Lockwasher (2)
20. Upper Capscrew (2)
21. Lockwasher (2)
22. Mounting Bracket
23. O-Ring
24. O-Ring
25. O-Ring
26. Key
27. Keyway

Figure 2-125. Hydraulic Pump

d. Secure hydraulic pump (5) with a sling to aid in supporting it.

e. Remove setscrew (14) from hydraulic pump propeller shaft end yoke (15) and remove hydraulic pump propeller shaft end yoke (15) from hydraulic pump (5) and MK48.

f. Remove two lower capscrews (16), nuts (18), lockwashers (19), and washers (17) from hydraulic pump (5). Discard lockwashers (19).

g. Carefully remove two upper capscrews (20) and lockwashers (21) from mounting bracket (22) and hydraulic pump (5). Discard lockwashers (21).

h. Carefully pull hydraulic pump (5) back, with help from assistant(s), to free it from mounting bracket (22).

i. Lower hydraulic pump (5) to the ground with help from assistant(s).

j. Remove three O-rings (23, 24, and 25) from hydraulic supply and pressure lines (4, 9, and 13). Discard O-rings (23, 24, and 25).

k. Remove key (26) from keyway (27).

2-111. PROPELLER SHAFT - TRANSMISSION TO TRANSFER CASE. Refer to Paragraph 2-120 in this manual for removal of propeller shafts.

2-112. ACCUMULATOR

WARNING

Hydraulics may be under pressure and can spurt out when lines are disconnected. To prevent personal injury, crack all lines slowly, keep face clear of lines, and wear safety glasses when working with hydraulic system.

NOTE

Tag all hydraulic lines before removal to ensure proper installation.

Place a container under accumulator to catch any hydraulic fluid that may spill when hydraulic lines are disconnected.

a. Remove hydraulic line (1, Figure 2-126) from 90° elbow (9).

b. Remove two nuts (2), lockwashers (3), cushion clamp (4), and capscrew (5). Discard lockwashers (3).

c. Remove accumulator (6) from mounting brackets (7).

d. Remove 90° elbow (9), O-ring (10), and nut (8) from accumulator (6). Discard O-ring (10).

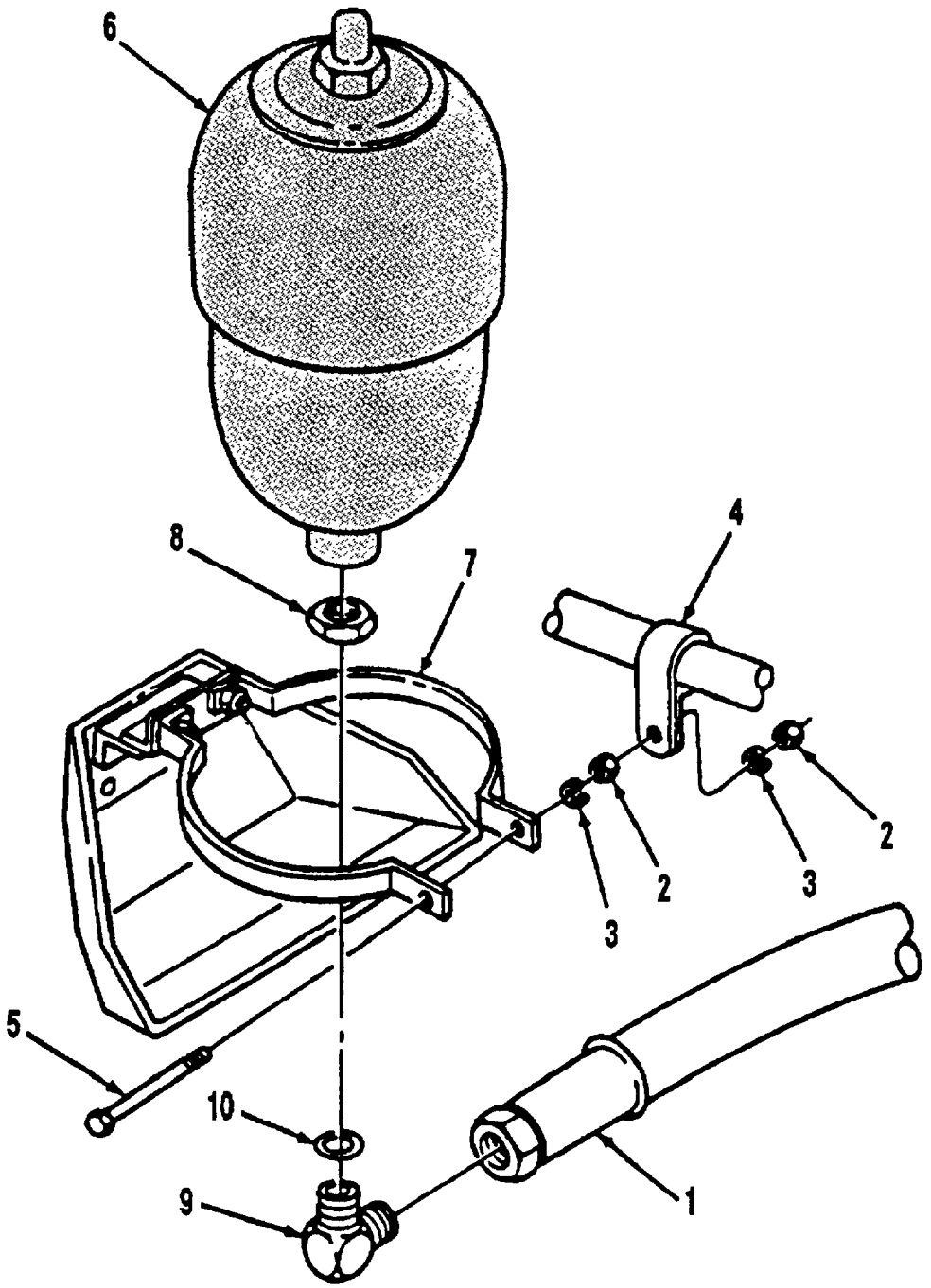

1. Hydraulic Line
2. Nut (2)
3. Lockwasher (2)
4. Cushion Clamp
5. Capscrew
6. Accumulator
7. Mounting Bracket (2)
8. Nut
9. 90° Elbow
10. O-Ring

Figure 2-126. Accumulator

2-112.1 ACCUMULATOR (LVSA1 SERIES VEHICLES ONLY)

WARNING

Hydraulics may be under pressure and can spurt out when lines are disconnected. To prevent personal injury, crack all lines slowly, keep face clear of lines, and wear safety glasses when working with hydraulic system.

NOTE

Tag all hydraulic lines before removal to ensure proper installation.

Place a container under accumulator to catch any hydraulic fluid that may spill when hydraulic lines are disconnected.

a. Remove hydraulic line (1, Figure 2-126.1) from 90° elbow (11).

b. Remove nut (2), lockwasher (3), washer (4) bracket (5), nut (6), and capscrew (7) from mounting bracket (8). Discard lockwasher (3).

c. Remove accumulator (9) from mounting bracket (8).

d. Loosen nut (10) and remove 90° elbow (11) and O-ring (12). Discard O-ring (12).

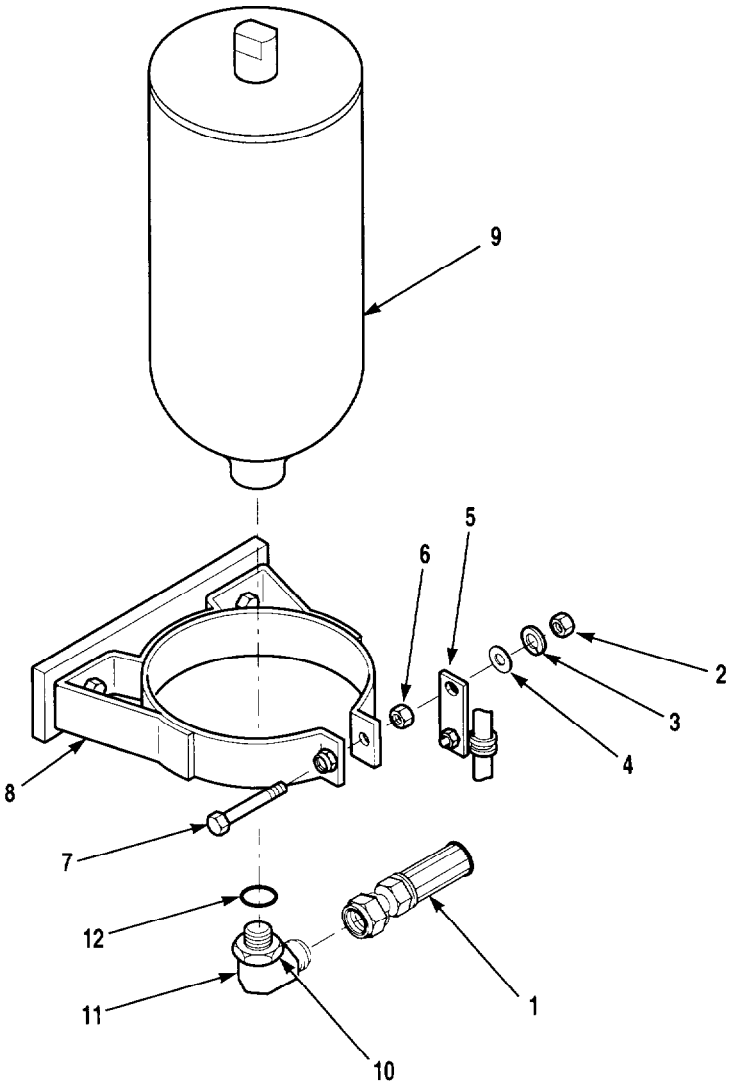

1. Hose
2. Nut
3. Lockwasher
4. Washer
5. Bracket
6. Nut
7. Capscrew
8. Mounting Bracket
9. Accumulator
10. Nut
11. Elbow
12. O-ring

Figure 2-126.1. Accumulator
(LVSA1 Series Vehicles Only)

2-113. FAN CONTROL RELIEF/UNLOAD VALVE

WARNING

Hydraulics may be under pressure and can spurt out when lines are disconnected. To prevent personal injury, crack all lines slowly, keep face clear of lines, and wear safety glasses when working with hydraulic system.

NOTE

Tag all hydraulic lines before removal to ensure proper installation.

Tag all wires before removal to ensure proper installation.

Place a container under fan control relief/unload valve to catch any hydraulic fluid that may spill when hydraulic lines are disconnected.

LVSA1 series vehicles have a new style fan control valve that is not interchangeable with a non-A1 series vehicle. Refer to TM 9-2320-297-24P for correct parts identification.

a. Disconnect plugs (1 and 2, Figure 2-127).

NOTE

Perform step a.1 on LVSA1 series vehicles only.

a.1 Disconnect connectors (1.1) and (2.1).

b. Remove three hydraulic lines (3, 4, and 5) from nipples (12, 13, and 14) respectively.

c. Remove hydraulic line (6) from 90° elbow (15).

d. Remove two nuts (9), lockwashers (10), and capscrews (8) from fan control relief/unload valve (7 or 7.1). Discard lockwashers (10).

e. Remove fan control relief/unload valve (7 or 7.1) from mounting bracket (11).

f. Remove nipples (12, 13, and 14) and 90° elbow (15) from fan control relief/unload valve (7 or 7.1).

2-114. COOLANT FILTER AND ADAPTER

NOTE

Place a container under coolant filter and lines to catch any coolant that might spill when hoses are removed.

Note location and position of valves to ensure proper installation.

a. Close two valves (1 and 2, Figure 2-128) by turning them clockwise.

b. Remove coolant filter (3), using a filter wrench, by turning it counterclockwise until coolant filter (3) is free of coolant filter adapter (10). Discard coolant filter (3).

NOTE

Hose clamps (4) have changed from worm type clamp to a constant torque "Breeze" type clamp. When repairing a non-A1 vehicle, use the new style constant torque clamp to replace the old style clamp. Refer to TM 9-2320-297-24P for correct part identification.

c. Loosen two hose clamps (4) and remove hoses (5 and 6) from valves (1 and 2).

d. Remove hose clamps (4) from hoses (5 and 6).

e. Remove two capscrews (7), lockwashers (8), bracket (9), and coolant filter adapter (10) from engine block (11). Discard lockwashers (8).

1. Plug
1.1. Connector*
2. Plug
2.1. Connector*
3. Hydraulic Line
4. Hydraulic Line
5. Hydraulic Line
6. Hydraulic Line
7. Fan Control Valve
7.1. Fan Control Valve*
8. Capscrew (2)
9. Nut (2)
10. Lockwasher (2)
11. Mounting Bracket
12. Nipple
13. Nipple
14. Nipple
15. Elbow

* LVSA1 Series Vehicles Only

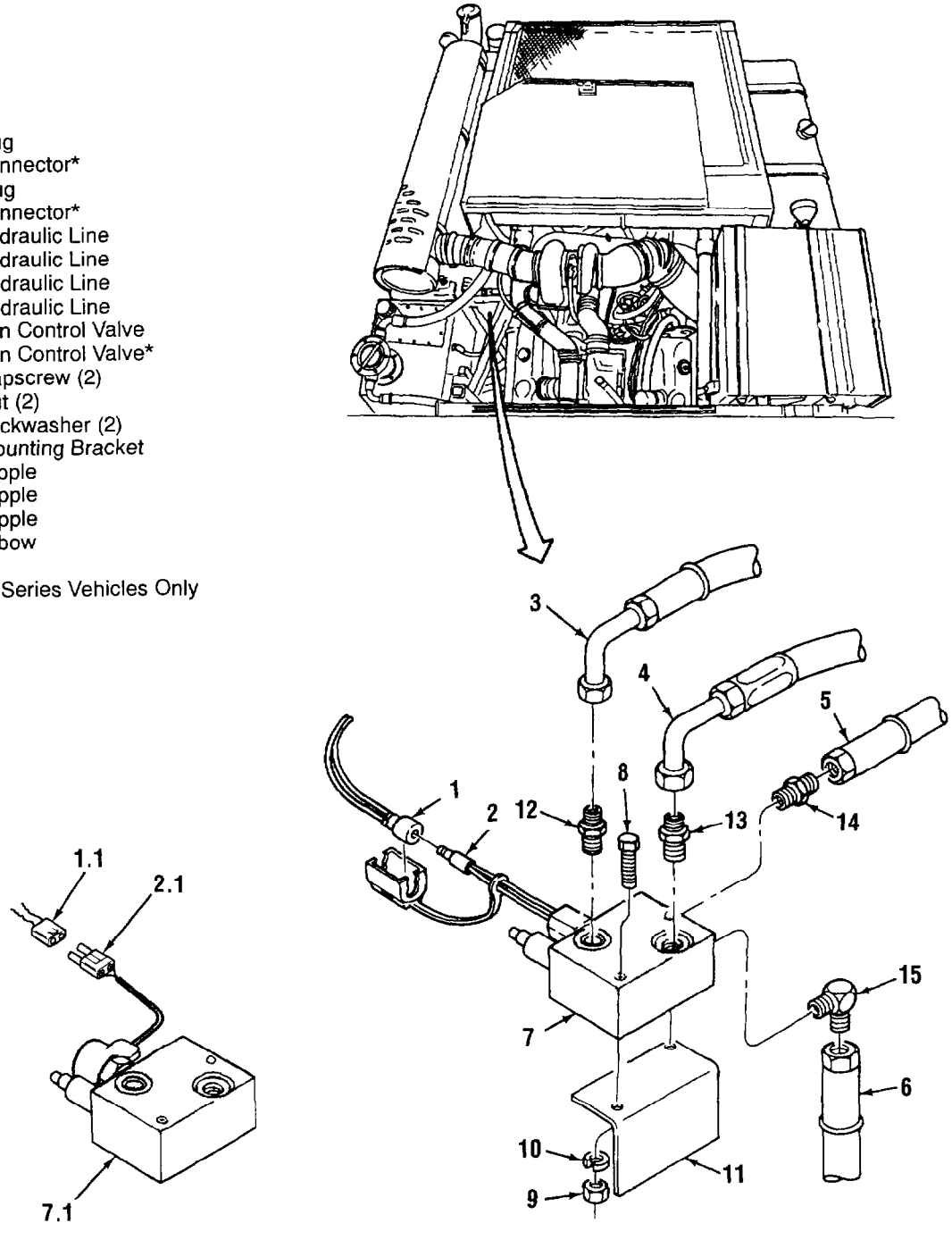

Figure 2-127. Fan Control Relief/Unload Valve

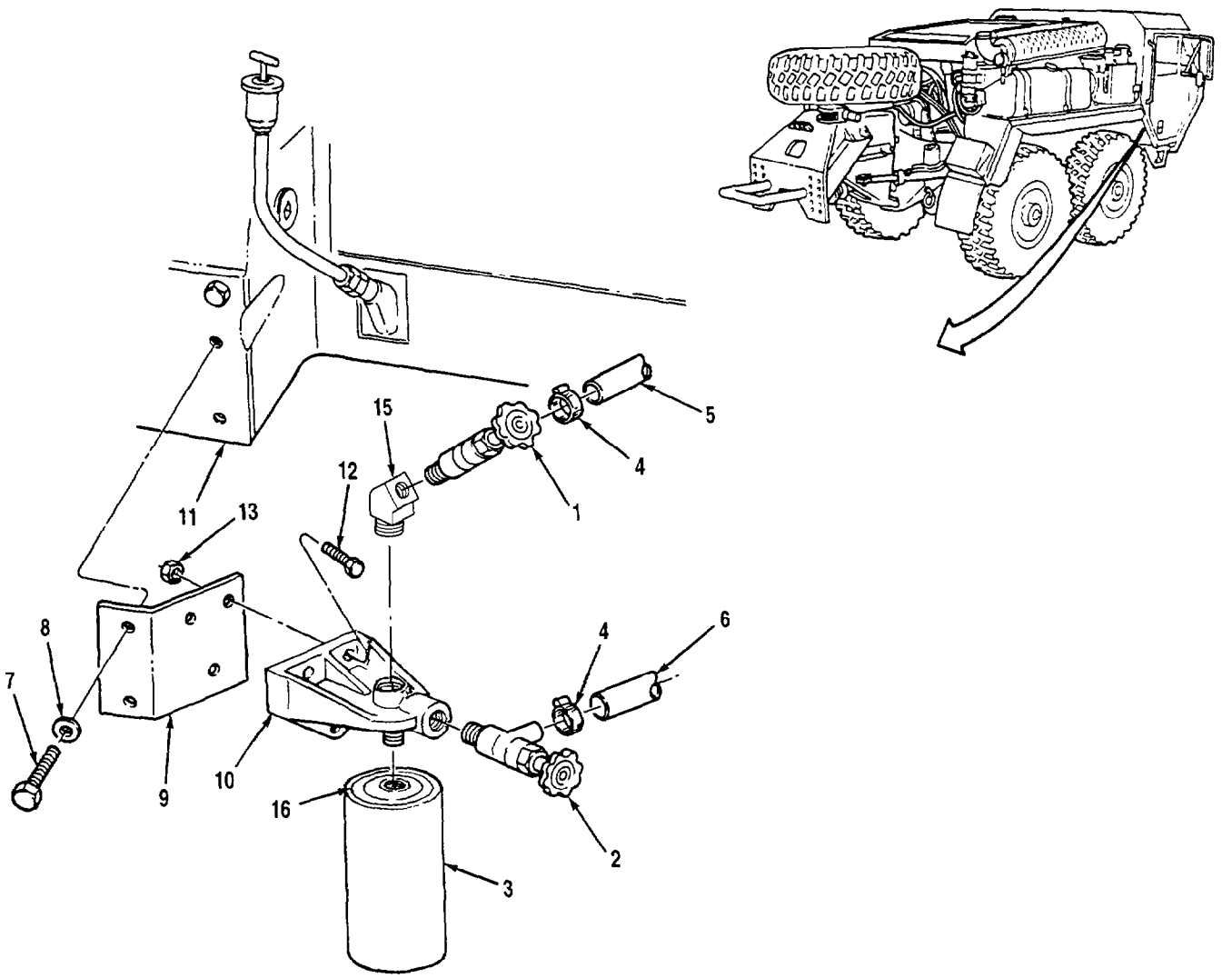

1. Valve
2. Valve
3. Coolant Filter
4. Hose Clamp (2)
5. Hose
6. Hose
7 Capscrew (2)
8. Lockwasher (2)
9. Bracket
10. Coolant Filter Adapter
11. Engine Block
12. Capscrew (3)
13. Nut (3)
14. Deleted
15. Elbow, Street
16. Coolant Filter Seal

Figure 2-128. Coolant Filter and Adapter

f. Remove three nuts (13) and capscrews (12) from bracket (9) and coolant filter adapter (10).

g. Remove valve (2) from coolant filter adapter (10).

NOTE

Fittings for the LVSA1 series vehicles has changed from a nipple and elbow to a street elbow. When repairing a non-A1 vehicle, use the new street elbow to replace the old style fitting. Refer to TM 9-2320-297-24P for correct part identification.

h. Remove street elbow (15), and valve (1) from coolant filter adapter (10).

2-115. POWER PACK. Refer to TM 2320-34/13 for removal of power pack.

2-116. VEHICLE STEP, SPLASH GUARDS, AND FENDER RUBBERS

a. Vehicles Step

NOTE

Mounting hardware for LVSA1 vehicle steps has changed from a capscrew, lockwasher and hex nut to a flanged style capscrew and locknut. When repairing a non-A1 vehicle, use the new flanged style mounting hardware to replace the old style hardware. Refer to TM 9-2320-297-24P for correct mounting hardware.

(1) Remove two locknuts (1, Figure 2-129) and capscrews (2) from upper ends of supports (8) and vehicle. Discard locknuts (1).

(2) Remove two locknuts (3), capscrews (4), vehicle step (5) or (5.1), and supports (8) from vehicle. Discard locknuts (3).

(3) Remove two locknuts (6), capscrews (7), and supports (8) from vehicle step (5) or (5.1). Discard locknuts (6).

NOTE

Perform step (4) for LVSA1 series vehicles only.

(4) Remove two locknuts (9), capscrews (10) and step (11). Discard locknuts (9).

NOTE

Procedures b and c work for both splash guards and both fender rubbers.

b. Splash Guards. Remove three locknuts (1, Figure 2-130), capscrews (2), retainer strip (3), and splash guard (4) from left or right fender (5 or 13). Discard locknuts (1).

NOTE

Mounting hardware for LVSA1 vehicle steps has changed

c. Fender Rubbers

NOTE

Due to the length of the fender rubbers, help may be necessary to support them during removal.

(1) Remove 27 locknuts (6), capscrews (9), and retainer strips (7, 8, and 10) from left or right fender rubber (11 or 12) and left or right fender (5 or 13).

(2) Remove left or right fender rubber (11 or 12) from left or right fender (5 or 13) respectively.

2-117. WHEEL CHOCK RACK, TOOL STOWAGE BOX, AND FENDERS

a. Wheel Chock Rack

NOTE

Attaching hardware for LVS wheel chock rack has changed from four washers and locknuts to four locknuts. When repairing non-A1 vehicles, use the new style hardware to replace the old style hardware. Refer to TM 9-2320-297-24P for correct parts identification.

(1) Remove four locknuts (1, Figure 2-131) from wheel chock rack (3). Discard locknuts (1).

(2) Remove wheel chock rack (3), four washers (2), and angle bracket (4) from left fender (5).

(3) Remove four nuts (5.1) from wheel chock rack (3).

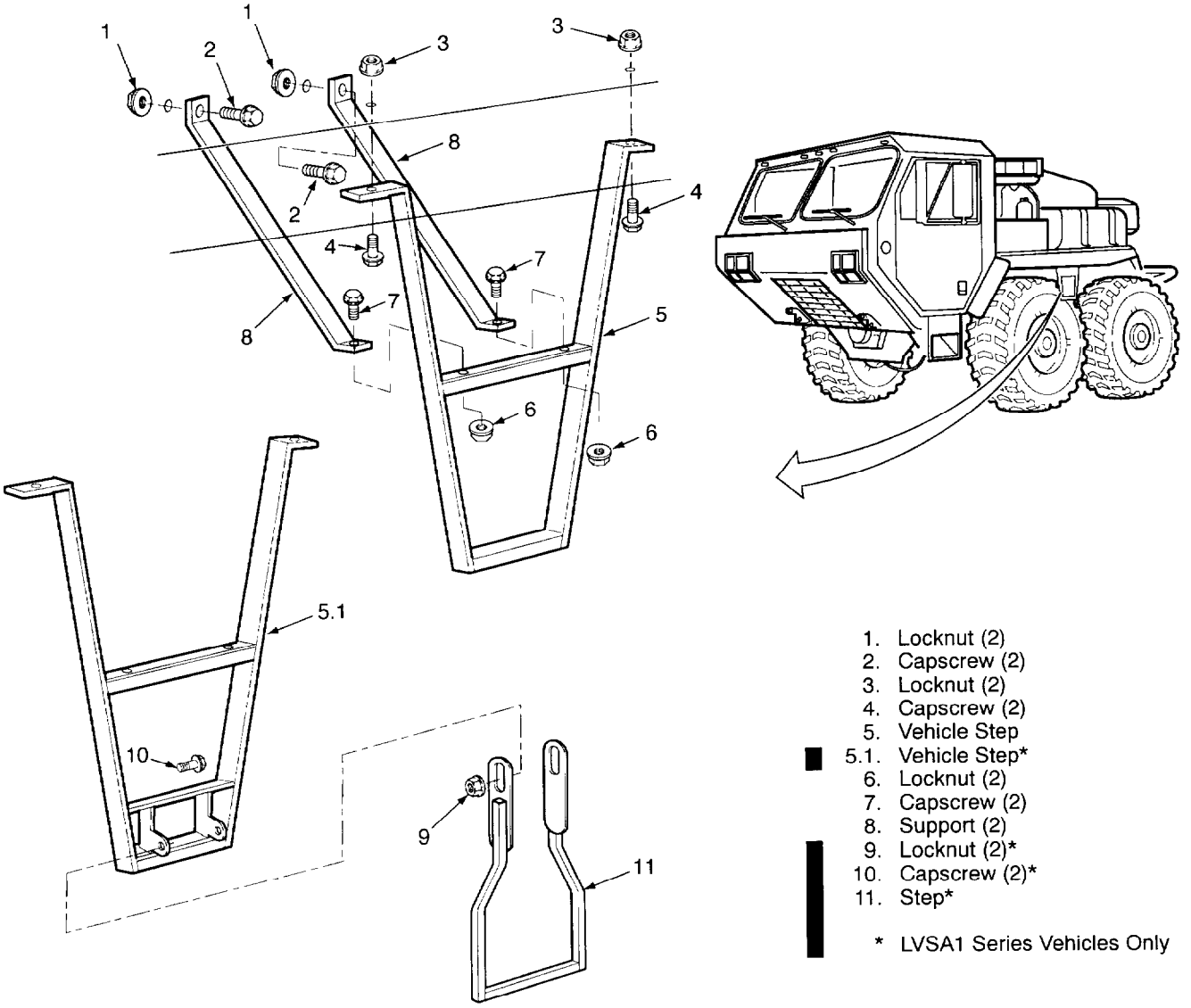

1. Locknut (2)
2. Capscrew (2)
3. Locknut (2)
4. Capscrew (2)
5. Vehicle Step
5.1. Vehicle Step*
6. Locknut (2)
7. Capscrew (2)
8. Support (2)
9. Locknut (2)*
10. Capscrew (2)*
11. Step*

* LVSA1 Series Vehicles Only

Figure 2-129. Vehicle Step

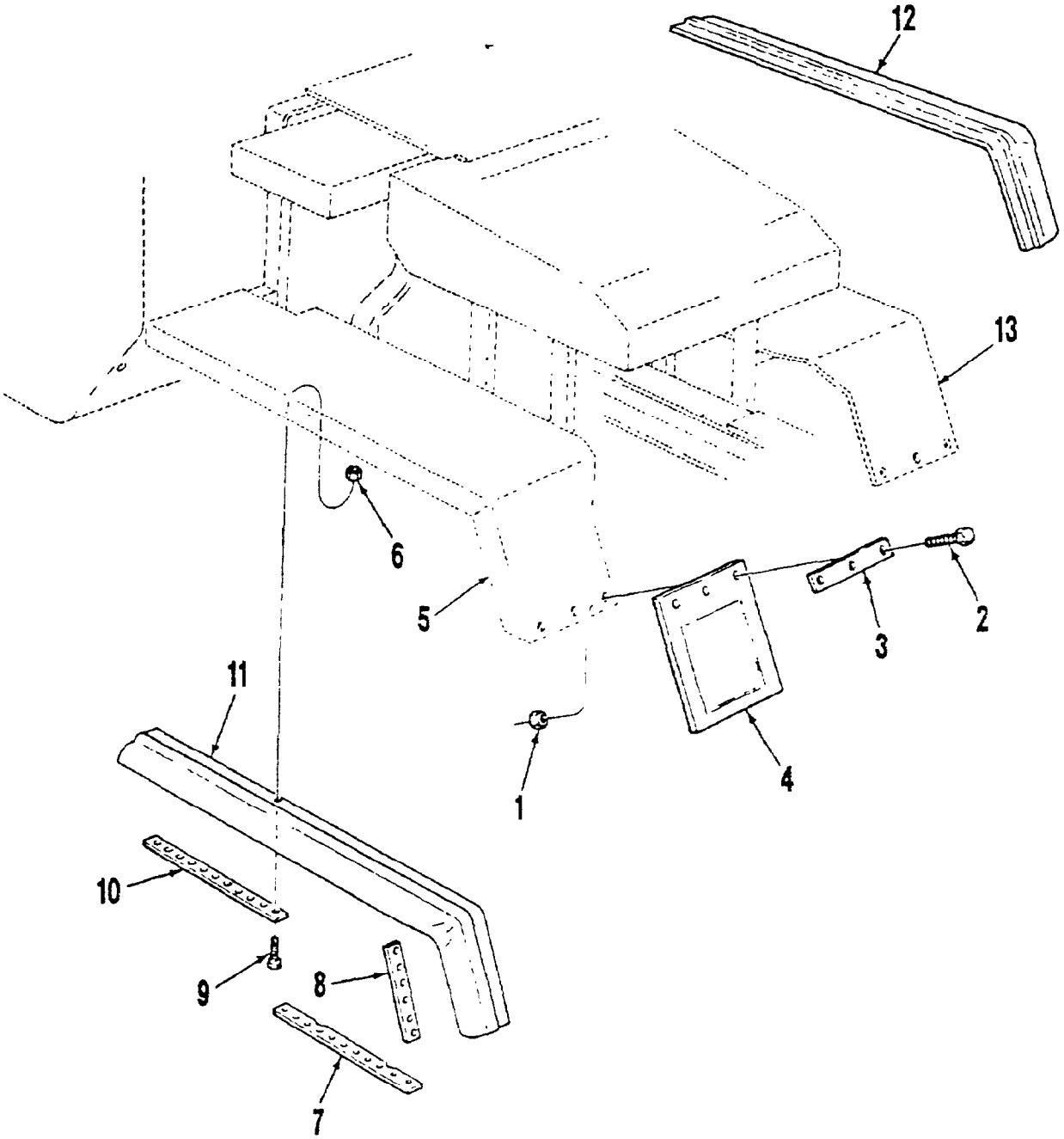

1. Locknut (3)
2. Capscrew (3)
3. Retainer Strip
4. Splash Guard
5. Left Fender
6. Locknut (27)
7. Retainer Strip
8. Retainer Strip
9. Capscrew (27)
10. Retainer Strip
11. Left Fender Rubber
12. Right Fender Rubber
13. Right Fender

Figure 2-130. Splash Guards and Fender Rubbers

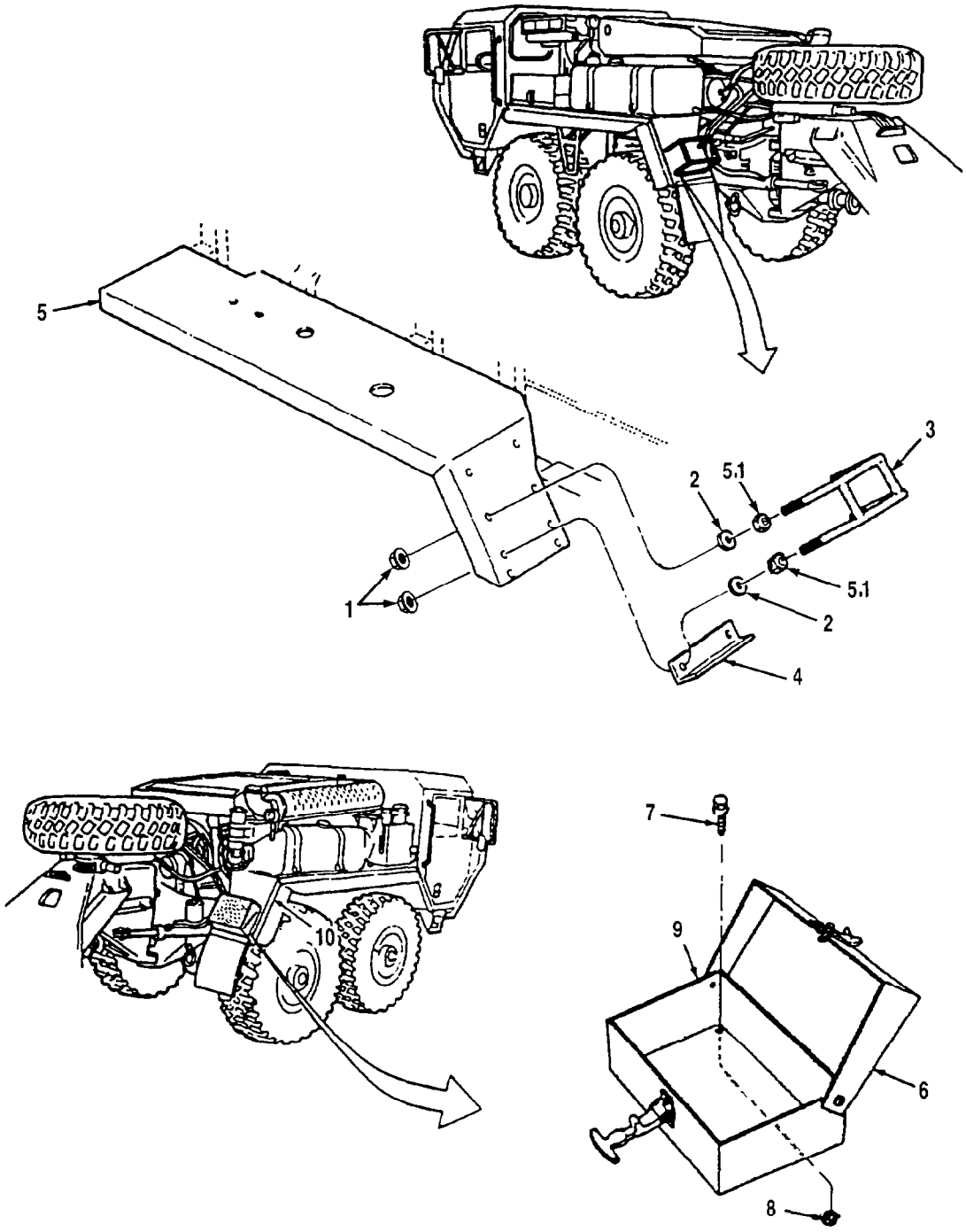

1. Locknut (4)
2. Washer (4)
3. Wheel Chock Rack
4. Angle Bracket
5. Left Fender
5.1. Nut (4)
6. Tool Stowage Box Cover
7. Capscrew (4)
8. Locknut (4)
9. Tool Stowage Box
10. Right Fender

Figure 2-131. Wheel Chock Rack and Tool Stowage Box

b. Tool Stowage Box

(1) Open tool stowage box cover (6) to access capscrews (7).

(2) Remove four locknuts (8), capscrews (7), and tool stowage box (9) from right fender (10). Discard locknuts (8).

c. Fenders

WARNING

The fenders are very heavy and awkward to handle. To prevent personal injury, use an overhead lifting device to remove fenders from vehicle.

NOTE

To remove fenders, all components and accessories must be removed from fenders.

This procedure works for both fenders.

(1) Remove two locknuts (1, Figure 2-132), washers (2), and capscrews (3) from right or left fender (4 or 5). Discard locknuts (1).

(2) Remove right fender (4) from fender supports (6 and 7).

(3) Remove two locknuts (1), capscrews (3), and fender supports (6 and 7) from fender brace (8). Discard locknuts (1).

2-118. PILLOW BLOCK ASSEMBLY

NOTE

Refer to Paragraph 2-120 for removal of companion flange (1, Figure 2-133), eight nuts (3), lockwashers (4), capscrews (5).

a. Remove locknut (6) and washer (7) from shaft (20). Discard locknut (6).

b. Remove companion flange (2) from shaft (20).

c. Remove four nuts (8), lockwashers (9), and capscrews (10) from slip yoke (11). Discard lockwashers (9).

d. Slide slip yoke (11) toward rear of vehicle and remove.

WARNING

The pillow block assembly is very heavy and awkward to handle. To prevent personal injury, use a lifting device or help from assistant(s) to remove pillow block assembly from vehicle.

e. Have assistant(s) support shaft assembly (12, Figure 2-133).

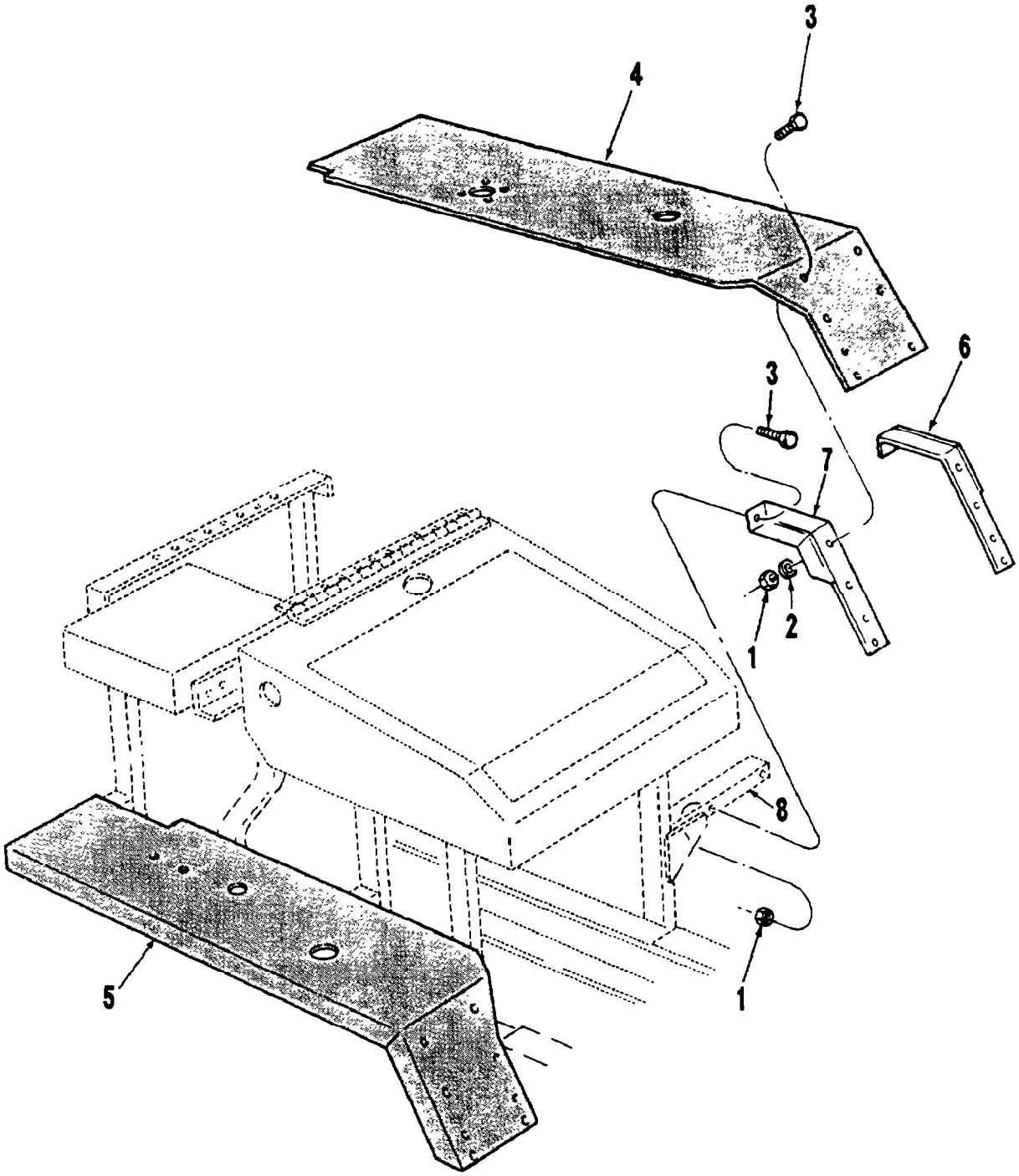

1. Locknut (4)
2. Washer (2)
3. Capscrew (4)
4. Right Fender
5. Left Fender
6. Fender Support
7. Fender Support
8. Fender Brace

Figure 2-132. Fenders

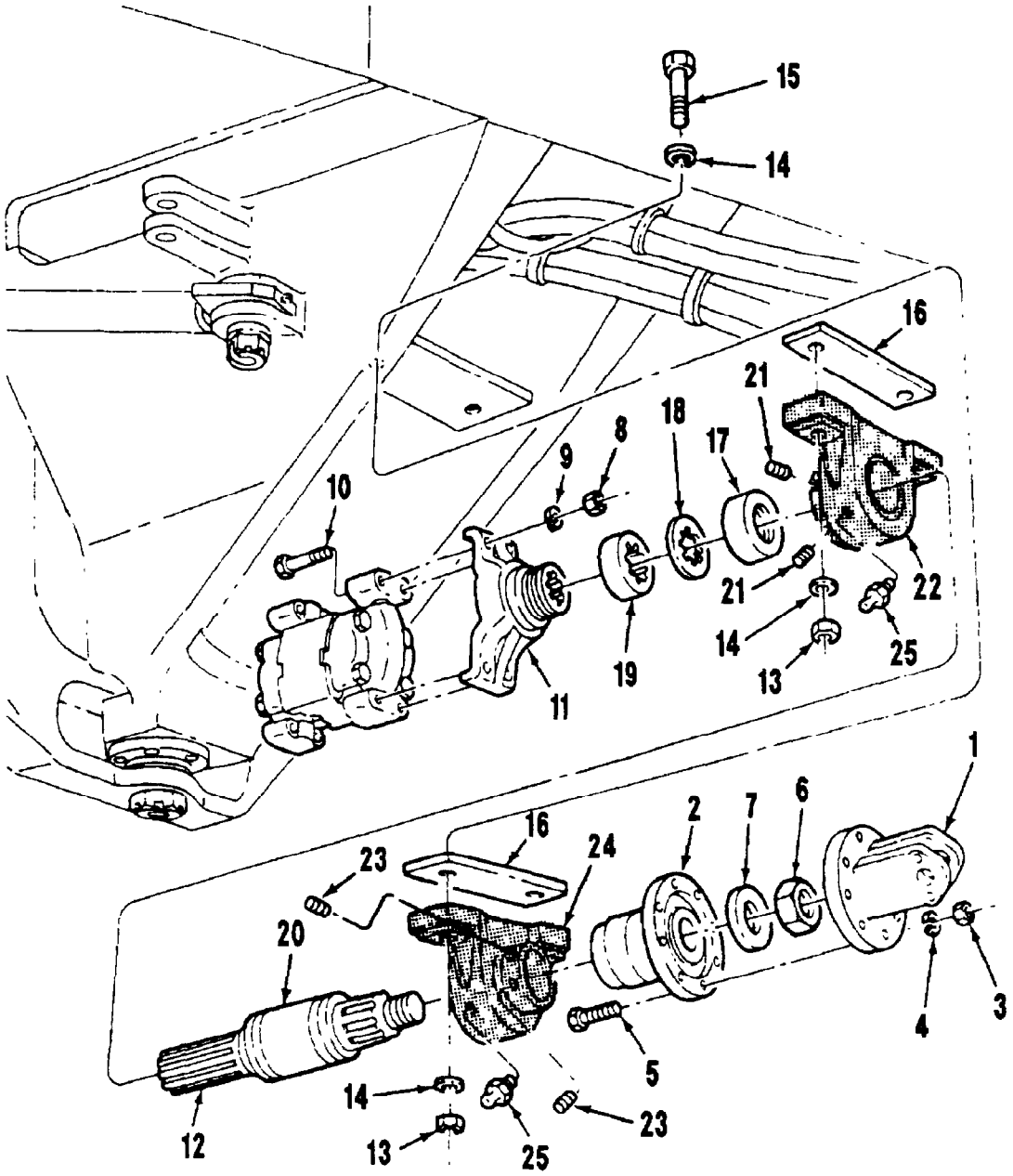

1. Companion Flange
2. Companion Flange
3. Nut (8)
4. Lockwasher (8)
5. Capscrew (8)
6. Locknut
7. Washer
8. Nut (4)
9. Lockwasher (4)
10. Capscrew (4)
11. Slip Yoke
12. Shaft Assembly
13. Locknut (4)
14. Washer (8)
15. Capscrew (4)
16. Pillow Block Spacer (2)
17. Dust Cap
18. Washer
19. Packing
20. Shaft
21. Allen Screw (2)
22. Pillow Block Bearing
23. Allen Screw (2)
24. Pillow Block Bearing
25. Grease Fitting (2)

Figure 2-133. Pillow Block Assembly

f. Remove four locknuts (13), eight washers (14), and four capscrews (15) from pillow block bearings (22 and 24) and vehicle. Discard locknuts (13).

g. Remove shaft assembly (12), pillow block bearings (22 and 24), and two pillow block spacers (16) from vehicle.

2-119. CARDAN JOINT

WARNING

The cardan joint is very heavy and awkward to handle. To prevent personal injury, use a lifting device or help from assistant(s) to remove Cardan joint from vehicle.

a. Remove four nuts (1, Figure 2-134), lockwashers (2), and capscrews (3), from propeller shaft side of Cardan joint (4). Discard lockwashers (2).

b. Slide slip yoke (5) toward rear of truck.

c. Have assistant support Cardan joint (4) and remove four nuts (6), lockwashers (7), and capscrews (8). Discard lockwashers (7).

d. Remove Cardan joint (4) from transfer case output yoke (9).

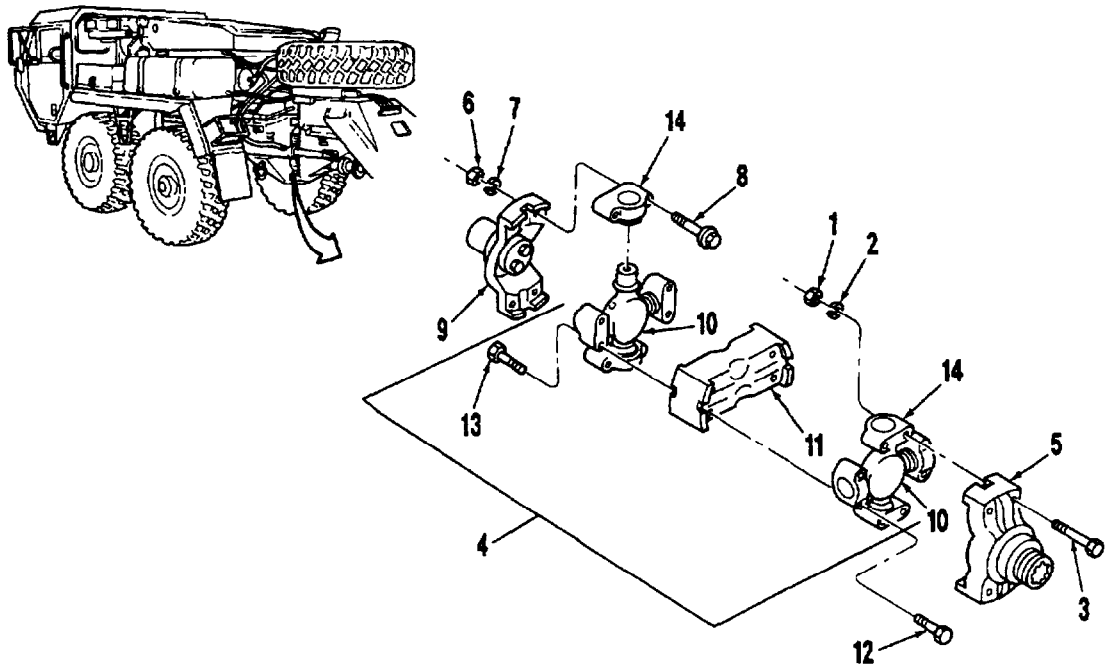

1. Nut (4)
2. Lockwasher (4)
3. Capscrew (4)
4. Cardan Joint
5. Slip Yoke
6. Nut (4)
7. Lockwasher (4)
8. Capscrew (4)
9. Transfer Case Output Yoke
10. Universal Joint (2)
11. Center Plate
12. Capscrew (4)
13. Capscrew (4)
14. Universal Joint Cap (8)

Figure 2-134. Cardan Joint

2-120. PROPELLER SHAFTS AND UNIVERSAL JOINTS

WARNING

Propeller shafts and universal joints are very heavy. To prevent personal injury, be very careful when removing propeller shafts and universal joints. Use proper lifting equipment or assistant(s) when handling propeller shafts and universal joints.

NOTE

For removal of propeller shafts with companion flanges, follow steps a through e.

For removal of propeller shafts with yokes, follow steps f through h.

a. Matchmark companion flanges (1, Figure 2-135).

b. Remove eight nuts (2), lockwashers (3), and capscrews (4) from companion flange (1). Discard lockwashers (3). Repeat steps a and b for companion flanges (1) at other end of propeller shaft (5).

c. Remove locknut (13), chain (10), capscrew (12), and washer (11) from bracket (14). Discard locknut (13).

d. With lifting device or assistant(s) supporting propeller shaft (5), remove two nuts (9), lockwashers (8), and capscrews (7). Discard lockwashers (8).

e. Remove propeller shaft (5) and single center support bearing (6) from MK48.

NOTE

LVSA1 Series vehicles have changed mounting hardware for the bearing caps. The lockstraps are no longer used, and the capscrews have been replaced by a self-locking type of capscrew. When repairing non-A1 vehicles, use the new style hardware to replace the old style hardware. Refer to TM 9-2320-297-24P for correct part identification.

f. On shafts using yokes (3) and that have lockstraps (1, Figure 2-136), bend two lockstraps (1) away from four capscrews (2) and remove four capscrews from yoke (3). Discard capscrews (2) and lockstraps (1).

f.1. On shafts using yokes (3) and that do not have lockstraps, remove four self-locking capscrews (2.1). Discard self locking capscrews (2.1).

g. Remove one bearing cap (4) from yoke (3) and tap universal joint (5) down through yoke (3) to remove other bearing cap (6).

NOTE

It may be easier to remove all four bearing caps (17 and 19) to allow removal of shaft (20), depending on location of cross (18).

h. Disconnect propeller shaft (7) from yoke (3) by moving universal joint (5) to one side. Then tilt universal joint (5) to clear other side. Repeat steps f through g for other end of propeller shaft with yoke. Remove propeller shaft (7) from MK48 using lifting device or help from assistant(s).

2-121 TRANSFER CASE

WARNING

Hydraulics may be under pressure and can spurt out when lines are disconnected. To prevent personal injury, crack all lines slowly, keep face clear of lines, and wear safety glasses when working with hydraulic systems.

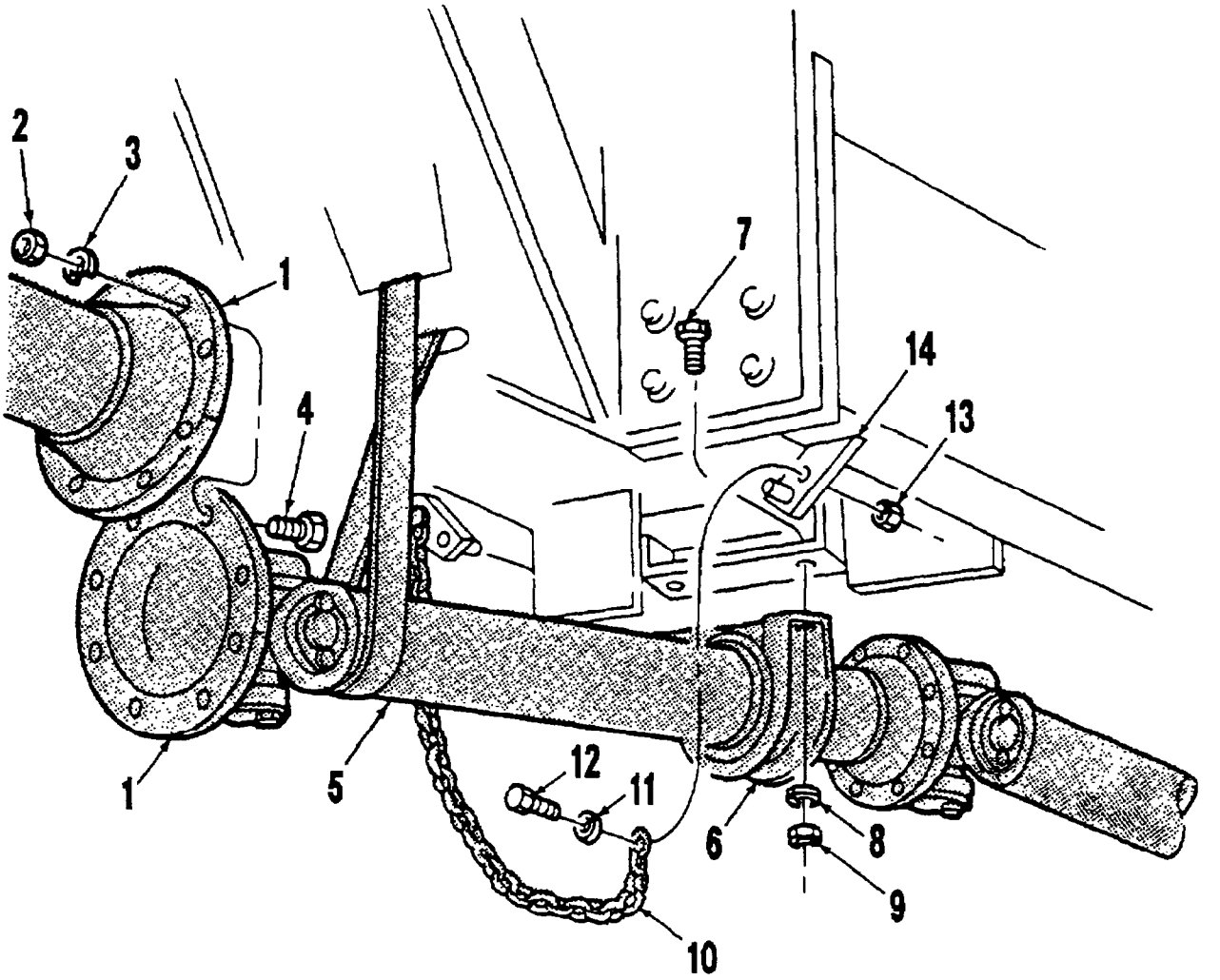

1. Companion Flange
2. Nut (8)
3. Lockwasher (8)
4. Capscrew (8)
5. Propeller Shaft
6. Single Center Support Bearing
7. Capscrew (2)
8. Lockwasher (2)
9. Nut (2)
10. Chain
11. Washer
12. Capscrew
13. Locknut
14. Bracket

Figure 2-135. Propeller Shafts with Companion Flanges

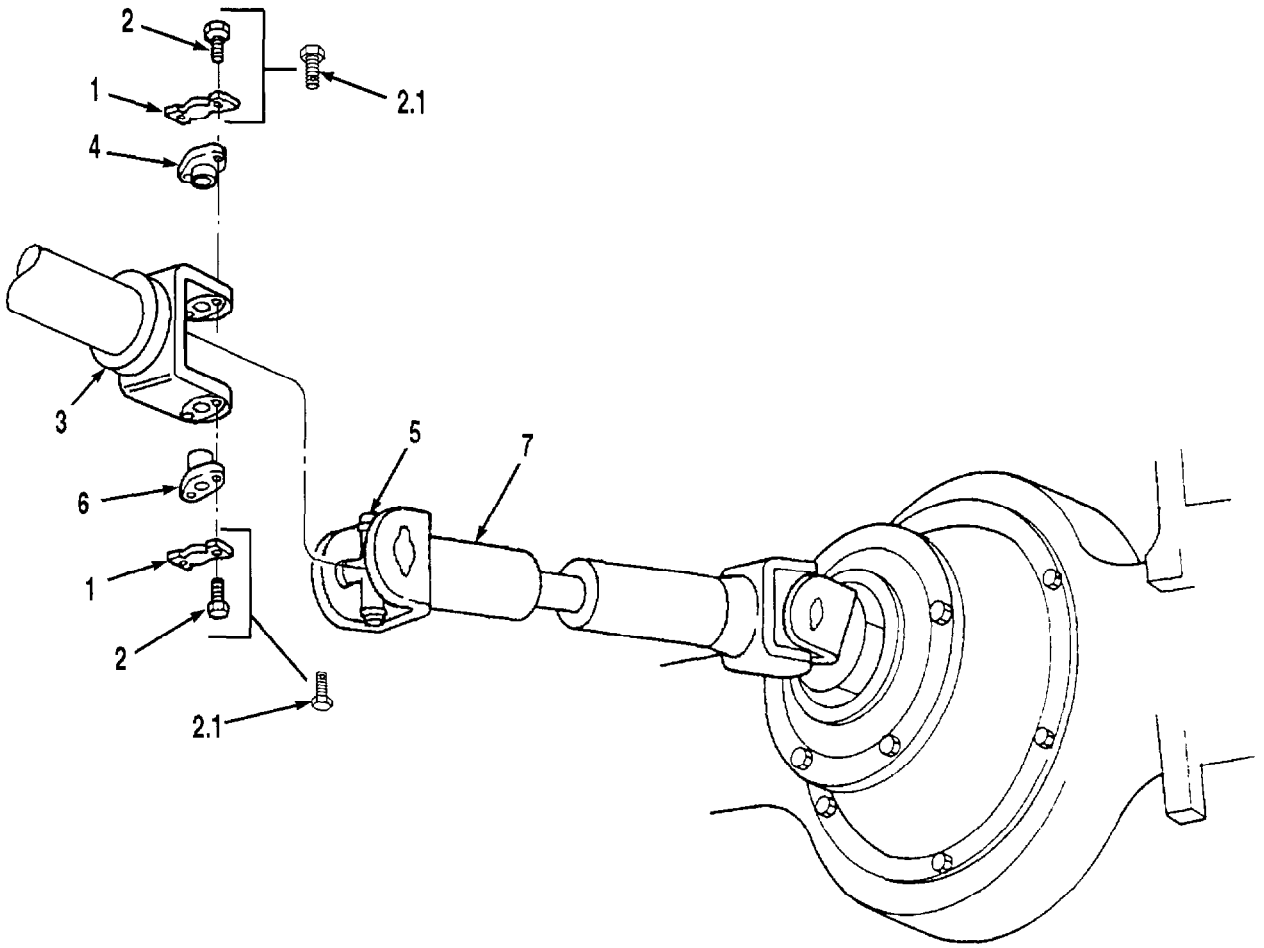

1. Lockstrap (2)
2. Capscrew (4)
2.1. Self-locking Capscrew (4)*
3. Yoke
4. Bearing Cap
5. Universal Joint
6. Bearing Cap
7. Propeller Shaft

* LVSA1 Series Vehicles Only

Figure 2-136. Propeller Shafts with Yokes

NOTE

Remove nylon ties as needed to allow removal of hydraulic lines and air lines.

Tag all hydraulic and air lines before removal to ensure proper installation.

Place a container under fluid (hydraulic, fuel, etc.) lines to catch any fluid that may spill when fluid lines are removed.

a. Remove two capscrews (1, Figure 2-137, Sheet 1 of 4), lockwashers (2), and shift cable bracket (3) from transfer case (4). Discard lockwashers (2).

b. Remove cotter pin (5), pin (6), and transfer case lower restraint (7) from bracket (8). Install pin (6) and old cotter pin (5) back in bracket (8).

c. Remove two air lines (9 and 10) from elbows (9A and 10A) respectively.

d. Remove elbow (10A) from adapter (10B) and remove elbow (9A) and adapter (10B) from lockup air chamber (11).

e. Remove capscrew (12, Figure 2-37, Sheet 2 of 4), lockwasher (13), and fuel line clamp (14) from lubrication pump (15). Screw capscrew (12) with original lockwasher (13) back in lubrication pump (15) finger tight.

f. Loosen and remove fuel line (16) at fitting (16A) and place out of the way.

g. Remove nut (17), lockwasher (18), washer (19), and capscrew (20) from clamp (21) and remove clamp (21) from bracket (21A). Discard lockwasher (18).

h. Remove three front hydraulic lines (22, 23, and 24, Figure 2-137, Sheet 3 of 4) from fittings in bracket (26).

i. Remove two capscrews (25) and bracket (26) from transfer case (4).

NOTE

Perform step i.1 on LVSA1 series vehicles only.

i.1 Remove two capscrews (25), washers (25.1), and bracket (26) from transfer case (4).

j. Install two capscrews (25) back in transfer case (4) finger tight.

NOTE

Perform step j.1 on LVSA1 series vehicles only.

j.1 Install two capscrews (25) and washer (25.1) back in transfer case (4) finger tight.

k. Remove four cotter pins (27, Figure 2-137, Sheet 4 of 4), castellated nuts (28), and washers (29). Discard cotter pins (27).

l. Remove four capscrews (30), washers (31), plates (32), and rubber biscuits (33).

WARNING

The transfer case is very heavy. To prevent personal injury, ensure eyebolt will support the weight of the transfer case.

To prevent personal injury or damage to equipment, have assistant(s) guide transfer case out of frame during removal procedures.

To prevent personal injury, direct personnel to stay clear of transfer case during removal procedures.

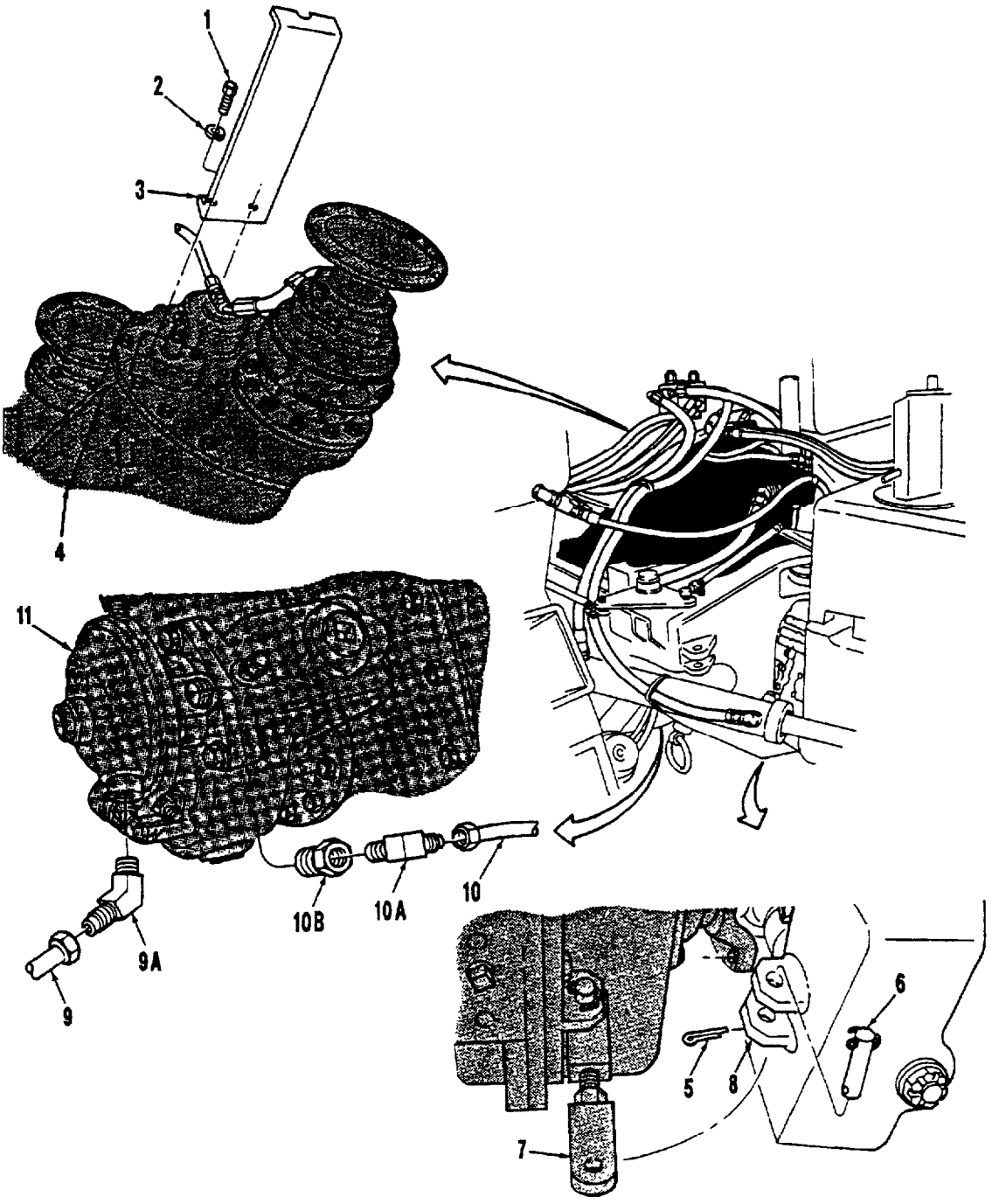

1. Capscrew (2)
2. Lockwasher (2)
3. Shift Cable Bracket
4. Transfer Case
5. Cotter Pin
6. Pin
7. Transfer Case Lower Restraint
8. Bracket
9. Air Line
9A. Elbow
10. Air Line
10A. Elbow
10B. Adapter
11. Lockup Air Chamber

Figure 2-137. Transfer Case (Sheet 1 of 4)

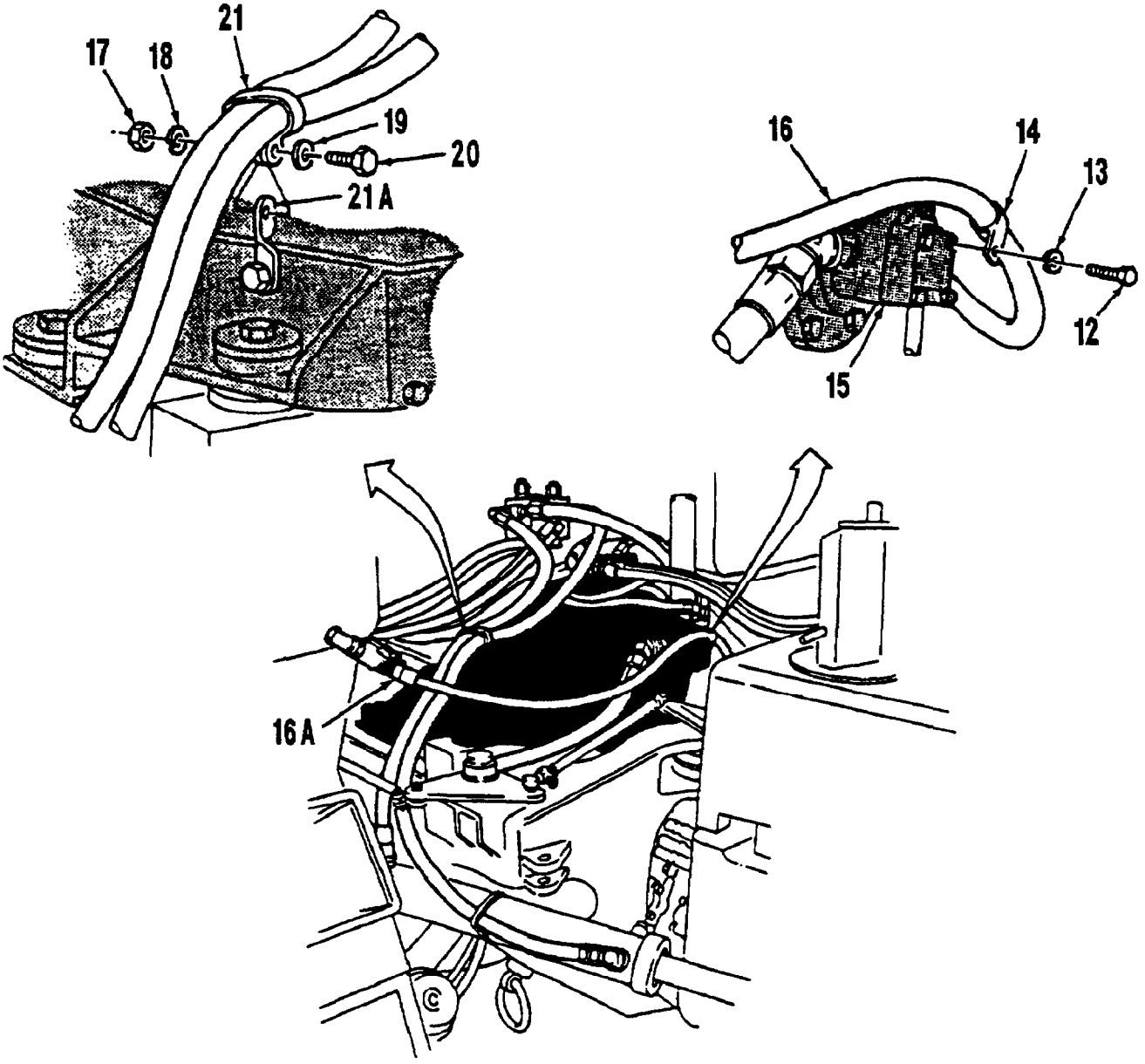

12.	Capscrew	17.	Nut
13.	Lockwasher	18.	Lockwasher
14.	Fuel Line Clamp	19.	Washer
15.	Lubrication Pump	20.	Capscrew
16.	Fuel Line	21.	Clamp
16A.	Fitting	21A.	Bracket

Figure 2-137. Transfer Case (Sheet 2 of 4)

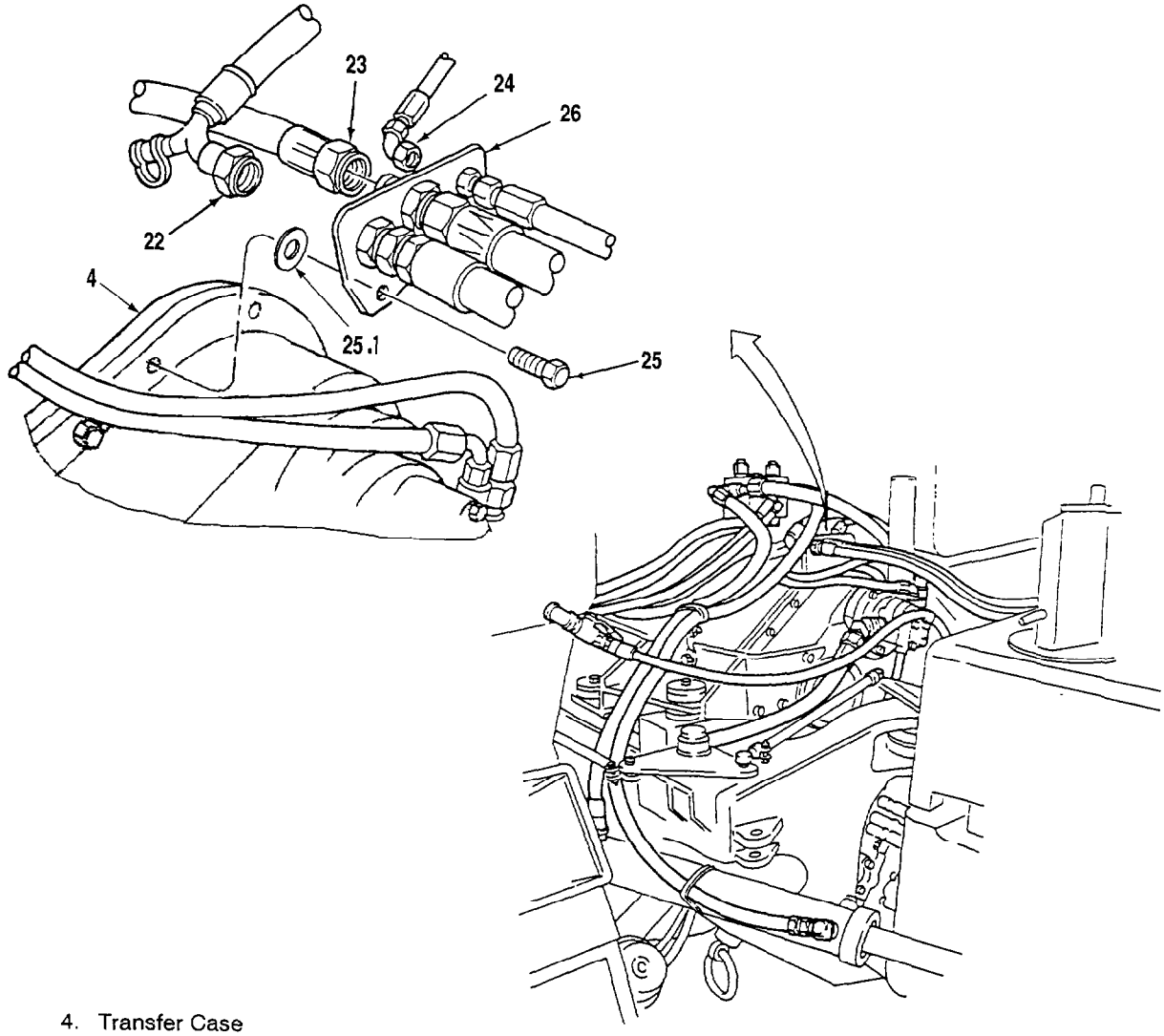

4. Transfer Case
22. Front Hydraulic Line
23. Front Hydraulic Line
24. Front Hydraulic Line
25. Capscrew (2)
25.1. Washer (2)*
26. Bracket

* LVSA1 Series Vehicles Only

Figure 2-137. Transfer Case (Sheet 3 of 4)

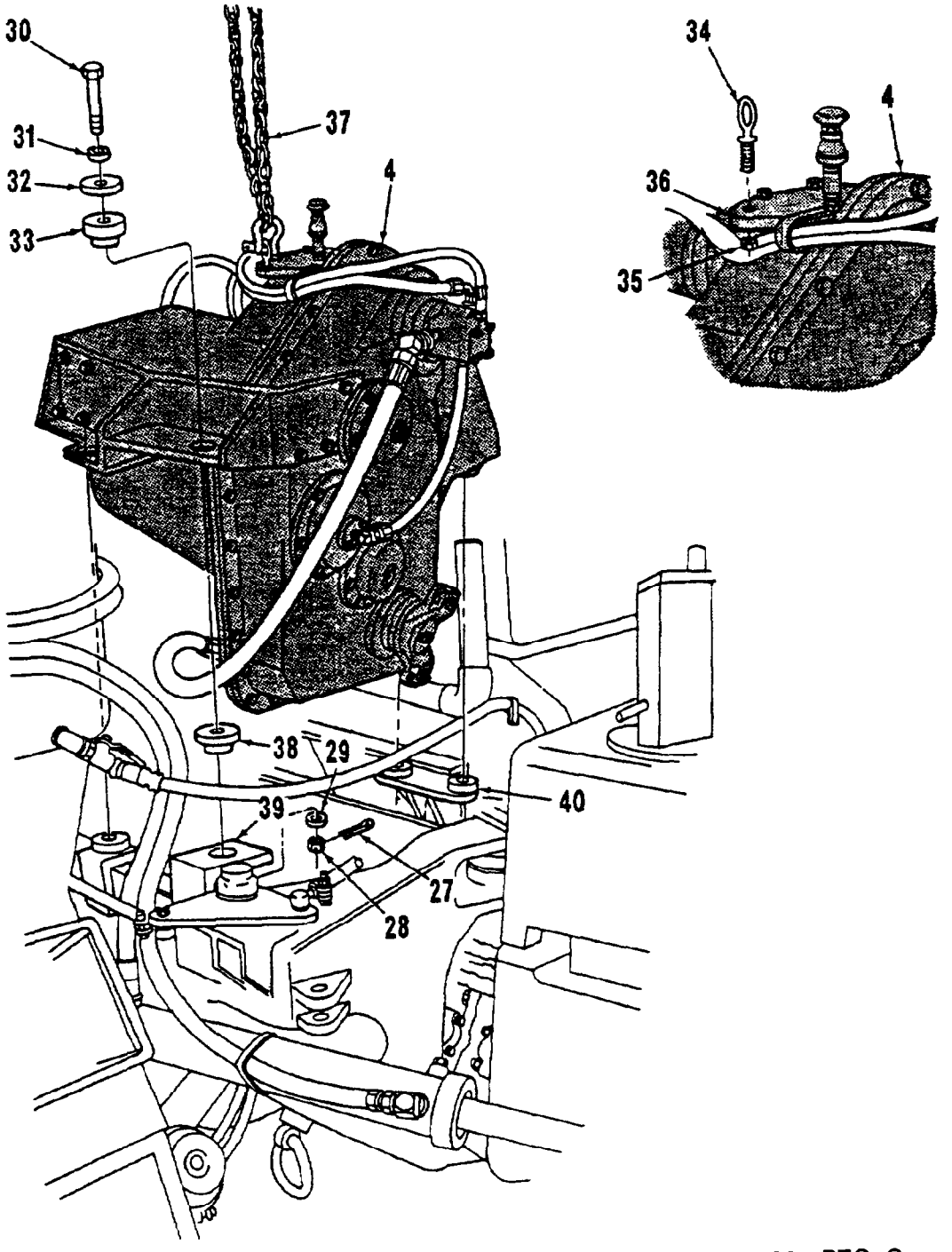

4. Transfer Case
27. Cotter Pin (4)
28. Castellated Nut (4)
29. Washer (4)
30. Capscrew (4)
31. Washer (4)
32. Plate (4)
33. Rubber Biscuit (4)
34. Eyebolt
35. Nut
36. PTO Cover
37. Lifting Device
38. Rubber Biscuit (4)
39. Frame Bracket
40. Frame Bracket

Figure 2-137. Transfer Case (Sheet 4 of 4)

m. Install eyebolt (34) and nut (35), or a suitable sling, to the power take-off (PTO) cover (36). Tighten nut (35) securely.

n. Attach lifting device (37) to eyebolt (34) and lift transfer case (4) up and out of frame.

WARNING

To prevent personal injury, support transfer case when it is on the ground so it will not fall over on personnel.

o. Lower transfer case (4) to the ground and support it securely.

p. Remove lifting device (37) from eyebolt (34).

q. Remove four rubber biscuits (38) from frame bracket (39 and 40).

2-122. DRAG LINKS

WARNING

The drag link is very heavy. To prevent personal injury, have assistant(s) help hold drag link during removal procedures.

NOTE

This procedure works for both drag links.

a. Remove two cotter pins (1, Figure 2-138) from drag link assembly (6). Discard cotter pins (1).

b. Remove castellated nuts (2 and 3) from socket assemblies (5 and 4) respectively.

c. Remove socket assemblies (4 and 5) using drag link removal tool and hammer.

NOTE

New style drag links do not have removable dust covers (11.1 and 11.2).

c.1. Remove dust covers (11.1) and (11.2), if damaged, from socket assemblies (4 and 5).

d. Remove drag link assembly (6) from vehicle.

e. Repeat steps a through d for drag link assembly (7).

2-123. FUSE LINK ASSEMBLY

WARNING

The fuse link assembly is heavy. To prevent personal injury, have assistant(s) help hold fuse link assembly during removal procedures.

a. Remove cotter pin (1, Figure 2-139) from socket assembly (2). Discard cotter pin (1).

b. Remove castellated nut (3) from socket assembly (2).

c. Remove socket assembly (2) from yaw bell crank (4).

d. Remove capscrew (5) and locknut (6) from yaw control valve (7). Discard locknut (6).

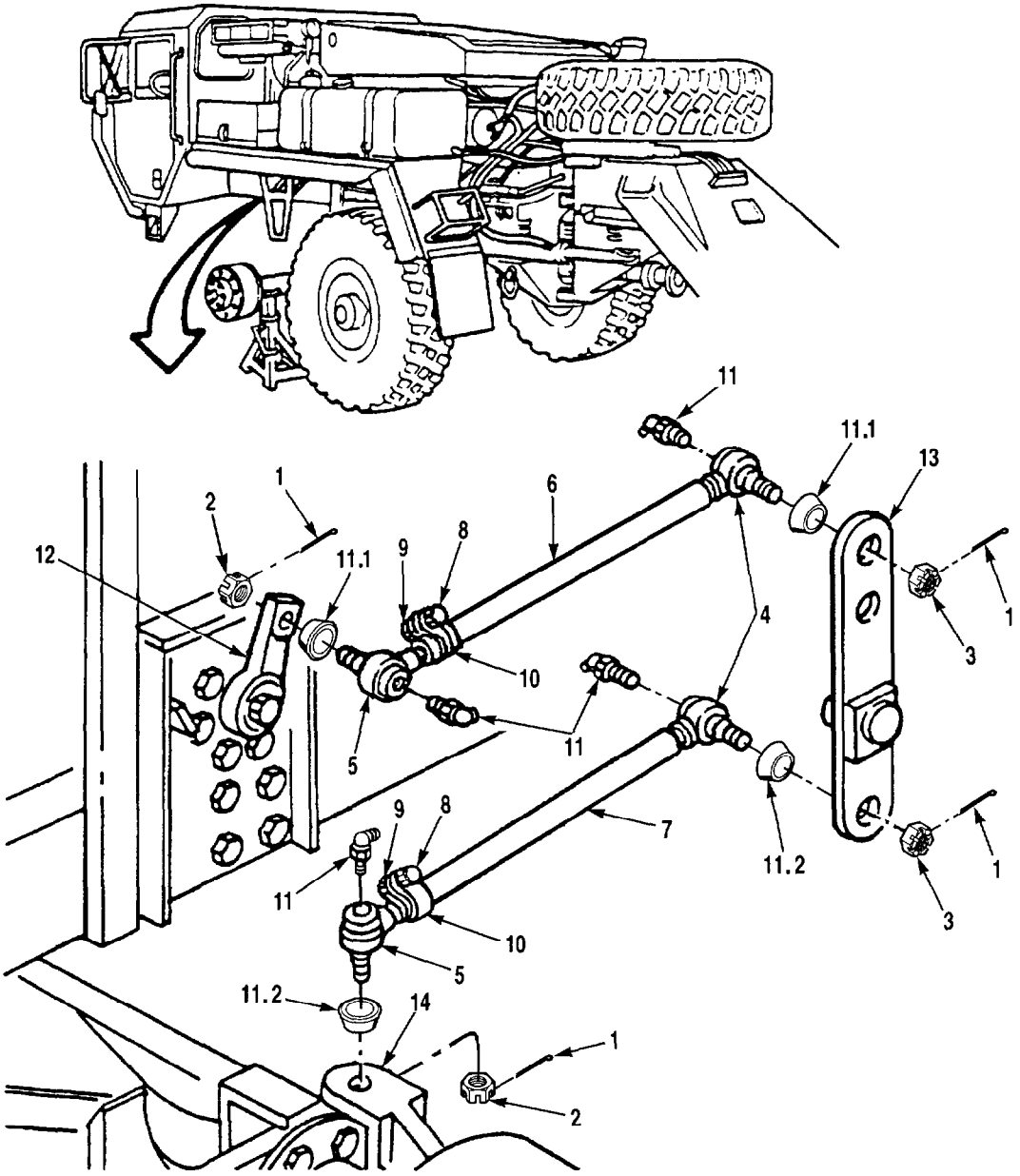

1. Cotter Pin (4)
2. Castle Nut (2)
3. Castle Nut (2)
4. Socket Assembly (2)
5. Socket Assembly (2)
6. Upper Drag Link Assembly
7. Lower Drag Link Assembly
8. Clamping Capscrew (2)
9. Nut (2)
10. Clamp (2)
11. Grease Fitting (4)

11.1. Dust Cover (2)
11.2. Dust Cover (2)

12. Pitman Arm
13. Bell Crank
14. Steering Arm

Figure 2-138. Drag Links

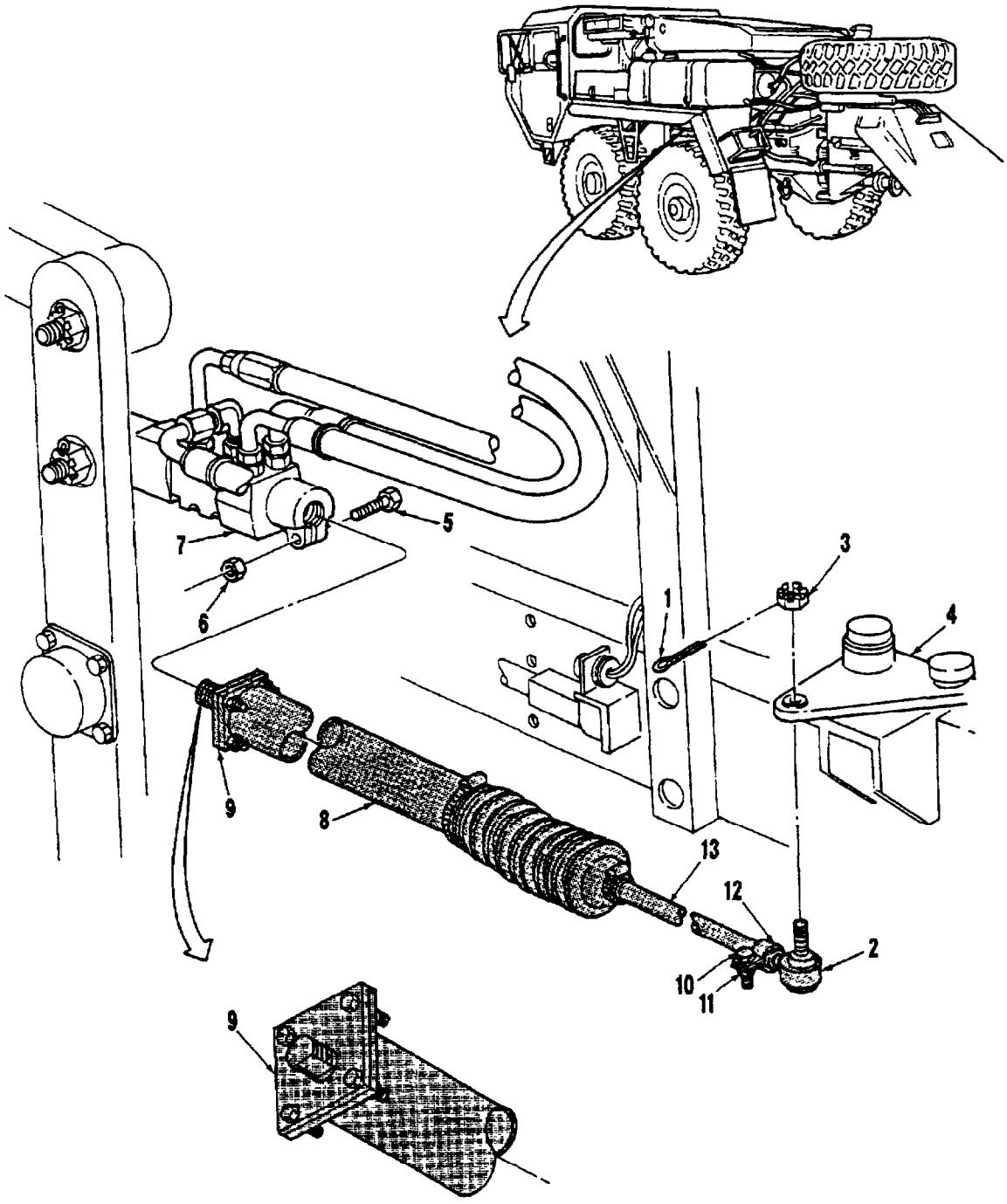

1. Cotter Pin
2. Socket Assembly
3. Castellated Nut
4. Yaw Bell Crank
5. Capscrew
6. Locknut
7. Yaw Control Valve
8. Fuse Link Assembly
9. Fuse Link Cover
10. Capscrew
11. Locknut
12. Clamp
13. Shaft

Figure 2-139. Fuse Link Assembly

e. Turn fuse link assembly (8) with fuse link cover (9) counterclockwise out of yaw control valve (7).

f. Remove fuse link assembly (8) from MK48.

2-124. YAW CONTROL VALVE

WARNING

Hydraulics may be under pressure and can spurt out when lines are disconnected. To prevent personal injury, crack all lines slowly, keep face clear of lines, and wear safety glasses when working with hydraulic system.

NOTE

Tag all hydraulic lines before removal to ensure proper installation.

Place container under yaw control valve to catch any hydraulic fluid that may spill when lines are removed.

a. Remove four hydraulic lines (1, 2, 3, and 4, Figure 2-140) from 90° elbow (13) and three straight fittings (10, 12, and 11) respectively.

b. Remove cotter pin (6) from castellated nut (8) and ball stud (7). Discard cotter pin (6).

c. Remove castellated nut (8) from ball stud (7).

d. Remove yaw control valve (5) from bell crank (9).

NOTE

Note position of all fittings before removal to ensure proper installation.

f. Remove straight fittings (10, 11, and 12) and 90° elbow (13) from yaw control valve (5).

2-125. YAW FEEDBACK LINKAGE

a. Remove two cotter pins (1, Figure 2-141) and castellated nuts (2) from socket assemblies (4 and 5). Discard cotter pins (1).

b. Remove drag link (3), with socket assemblies (4 and 5), from yaw bell crank assembly (6) and lever assembly (7).

c. Remove four capscrews (8), lockwashers (9), and lever assembly (7). Discard lockwashers (9).

CAUTION

Note location of flat washer (12) between capscrew (10) and yaw bell crank assembly (6) to ensure proper attachment of bell crank to casting.

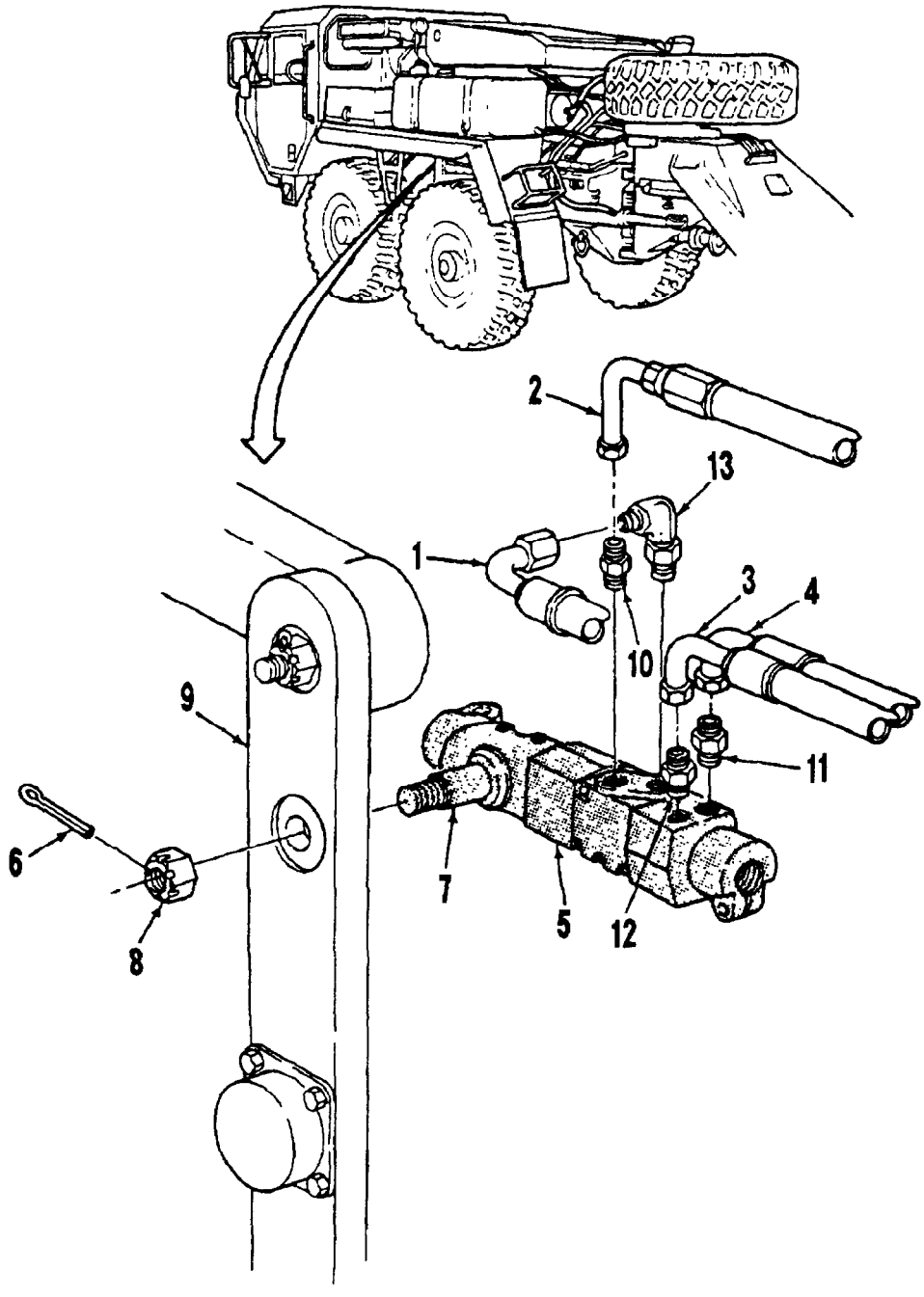

1. Hydraulic Line
2. Hydraulic Line
3. Hydraulic Line
4. Hydraulic Line
5. Yaw Control Valve
6. Cotter Pin
7. Ball Stud
8. Castellated Nut
9. Bell Crank
10. Straight Fitting
11. Straight Fitting
12. Straight Fitting
13. 90° Elbow

Figure 2-140. Yaw Control Valve

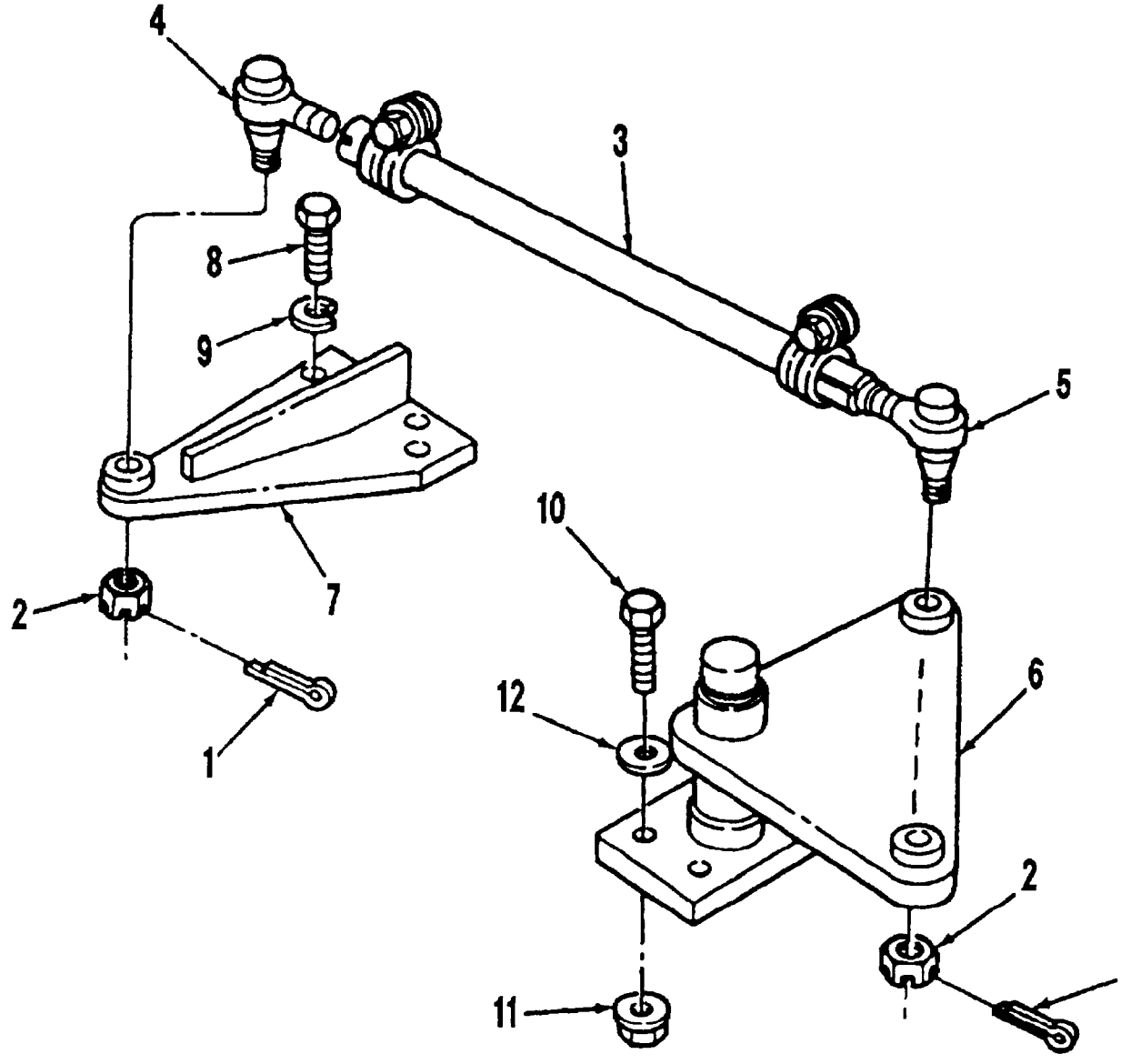

1. Cotter Pin (2)
2. Castellated Nut (2)
3. Drag Link
4. Socket Assembly (Left Hand)
5. Socket Assembly (Right Hand)
6. Yaw Bell Crank Assembly
7. Lever Assembly
8. Capscrew (4)
9. Lockwasher (4)
10. Capscrew (4)
11. Nut (4)
12. Flat Washer

Figure 2-141. Yaw Feedback Linkage

d. Remove four nuts (11), capscrews (10), one flat washer (12), and yaw bell crank assembly (6).

2-126. BELL CRANK

a. Remove four capscrews (1, Figure 2-142), lockwashers (2), and cover (3) from bell crank (9). Discard lockwashers (2).

b. Bend tabs of lockwasher (4) and remove nut (5), lockwasher (4), nut (6), and torque washer (7) from bell crank shaft (19).

NOTE

Do not mix bearing cones. They are matched with bearing cups.

c. Tag and remove outer bearing cone (8) from bell crank (9).

d. Remove bell crank (9) from bell crank bracket (10).

e. Remove seal (11) from bell crank (9). Discard seal (11).

f. Tag and remove inner bearing cone (12) from bell crank (9).

g. Tag and remove outer bearing cup (13) from bell crank (9).

h. Tag and remove inner bearing cup (14) from bell crank (9).

NOTE

Grease fitting may be located on either side of bell crank.

i. Remove grease fitting (15) from bell crank (9).

j. Remove six locknuts (16), capscrews (17), and bell crank bracket (10) from frame (18). Discard locknuts (16).

2-127. YAW STEERING CYLINDERS

WARNING

Hydraulics may be under pressure and can spurt out when lines are disconnected. To prevent personal injury, crack all lines slowly, keep face clear of lines, and wear safety glasses when working with hydraulic system.

NOTE

Tag all hydraulic lines before removal to ensure proper installation.

This procedure works for both yaw steering cylinders.

Place container under yaw steering cylinder to catch hydraulic fluid that may spill when hydraulic lines are removed.

Remove nylon ties as necessary during removal procedures.

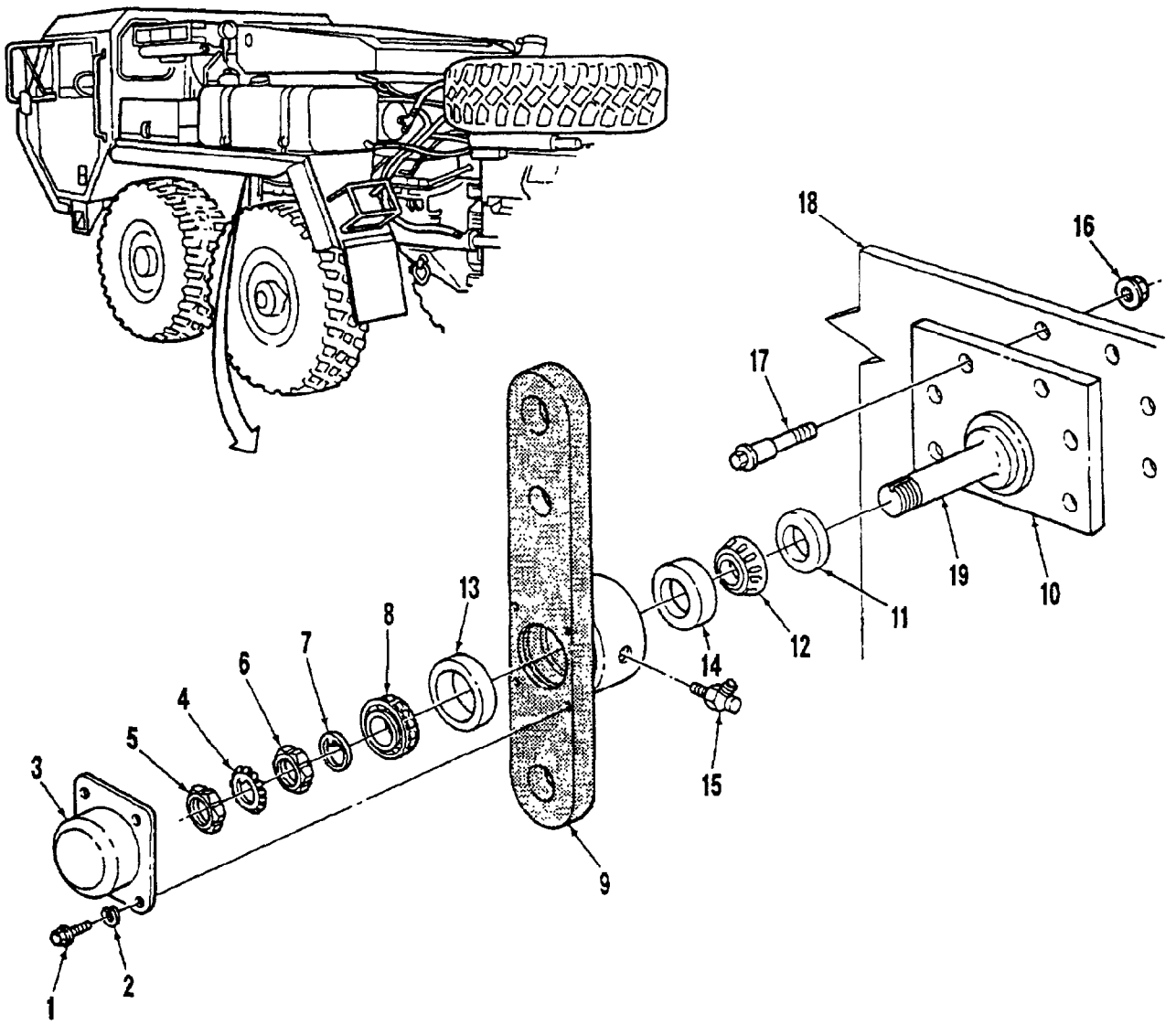

1. Capscrew (4)
2. Lockwasher (4)
3. Cover
4. Lockwasher
5. Nut
6. Nut
7. Torque Washer
8. Outer Bearing Cone
9. Bell Crank
10. Bell Crank Bracket
11. Seal
12. Inner Bearing Cone
13. Outer Bearing Cup
14. Inner Bearing Cup
15. Grease Fitting
16. Locknut (6)
17. Capscrew (6)
18. Frame
19. Bell Crank Shaft

Figure 2-142. Bell Crank

a. Remove hydraulic line 1, figure 2-143) from nipple (8).

b. Remove hydraulic line (2) from 90° elbow (10).

c. Remove cotter pin (4) from yaw steering cylinder pin (7) at each end of yaw steering cylinder (3). Discard cotter pin (4).

d. Remove castellated nut (5) and washer (6) from yaw steering cylinder pin (7) at each end of yaw steering cylinder (3).

e. Remove yaw steering cylinder (3) from vehicle.

f. Remove nipple (8), plug (9), and 90° elbow (10) form yaw steering cylinder.

NOTE

Plug (9) is deleted on LVSA1 series vehicles only.

Perform step f.1 on LVSA1 series vehicles only, with black surfaced cylinder rods.

f.1. Remove nipple (8) and elbow (10) from yaw cylinder (3).

g. Remove four bushings (11), if necessary, from mounting brackets (13).

h. Remove grease fitting (12) from each end of yaw steering cylinder (3).

2-128. ARTICULATION JOINT. Refer to TM 2320-34/13 for removal of articulation joint.

2-129. SHOCK ABSORBERS AND BUSHINGS.

a. Remove two locknuts (1, Figure 2-144) and hardened washers (2) from mounting brackets (5). Discard locknuts (1).

b. Remove two retainers (3) and rubber bushings (7) from mounting brackets (5). Discard rubber bushings (7).

c. Remove shock absorber (4) from mounting brackets (5).

d. Remove two inner retainers (6) and rubber bushings (7) from mounting brackets (5). Discard rubber bushings (7).

2-130. TORQUE RODS

WARNING

Due to the weight of the nose box, axle assembly no 1. is extremely front-heavy. Use a differential jack that will support the nose box on axle assembly no. 1 and will prevent it from falling forward when torque rods are removed. To prevent possible serious injury to personnel and damage to equipment, be extremely careful when removing torque rods.

Axle assembly no. 1 is heavier on left side. To prevent personal injury or possible damage to equipment, axle assembly no. 1 must be chained to differential jack to be properly supported and balanced.

The torque rods are very heavy. To prevent personal injury, have assistant(s) help remove torque rods from vehicles.

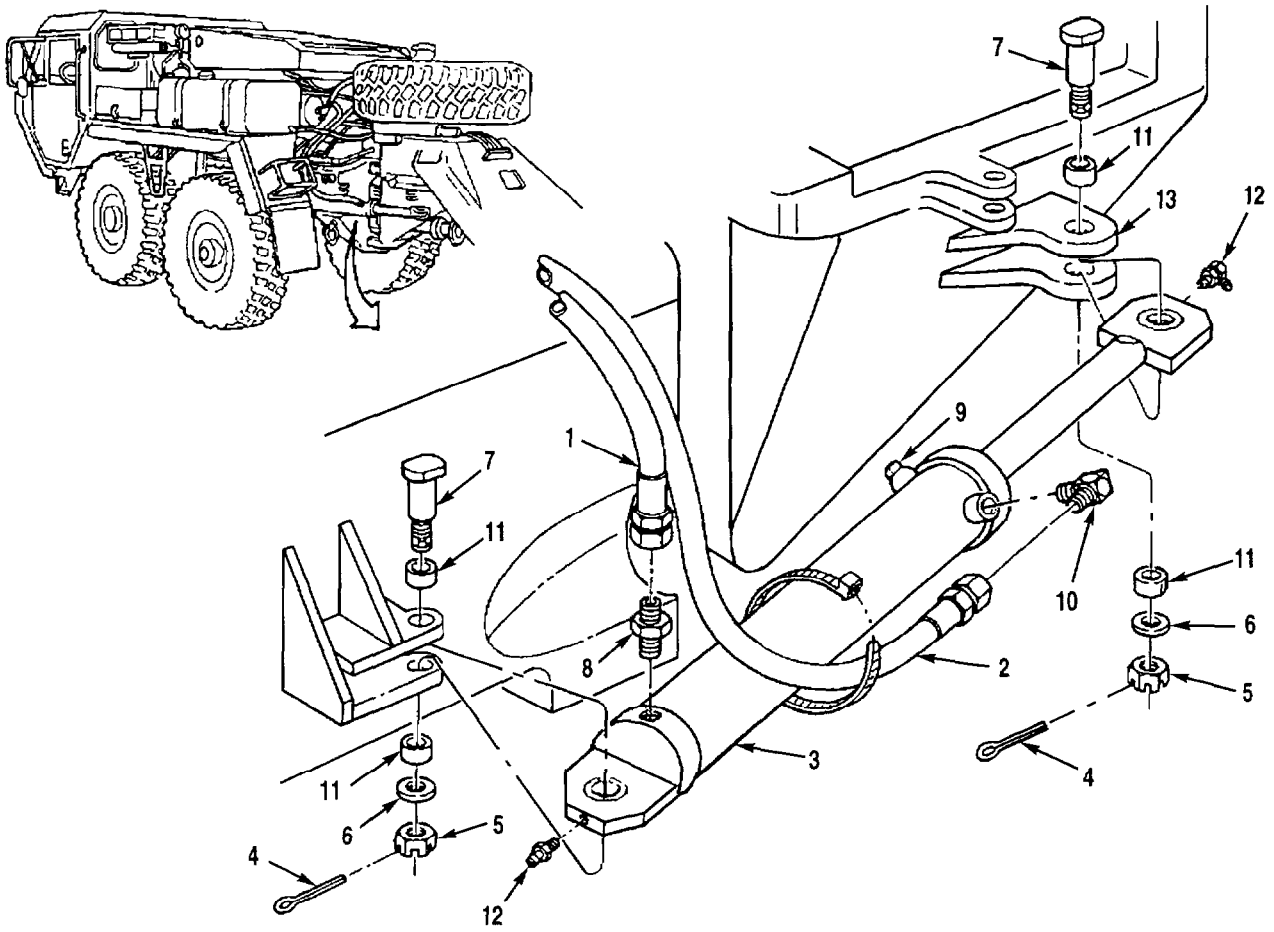

1. Hydraulic Line
2. Hydraulic Line
3. Yaw Steering Cylinder
4. Cotter Pin (2)
5. Castellated Nut (2)
6. Washer (2)
7. Yaw Steering Cylinder Pin (2)
8. Nipple
9. Plug*
10. 90 ° Elbow
11. Bushing (4)
12. Grease Fitting (2)
13. Mounting Bracket

* Deleted On LVSA1 Series Vehicles Only

Figure 2-143. Yaw Steering Cylinders

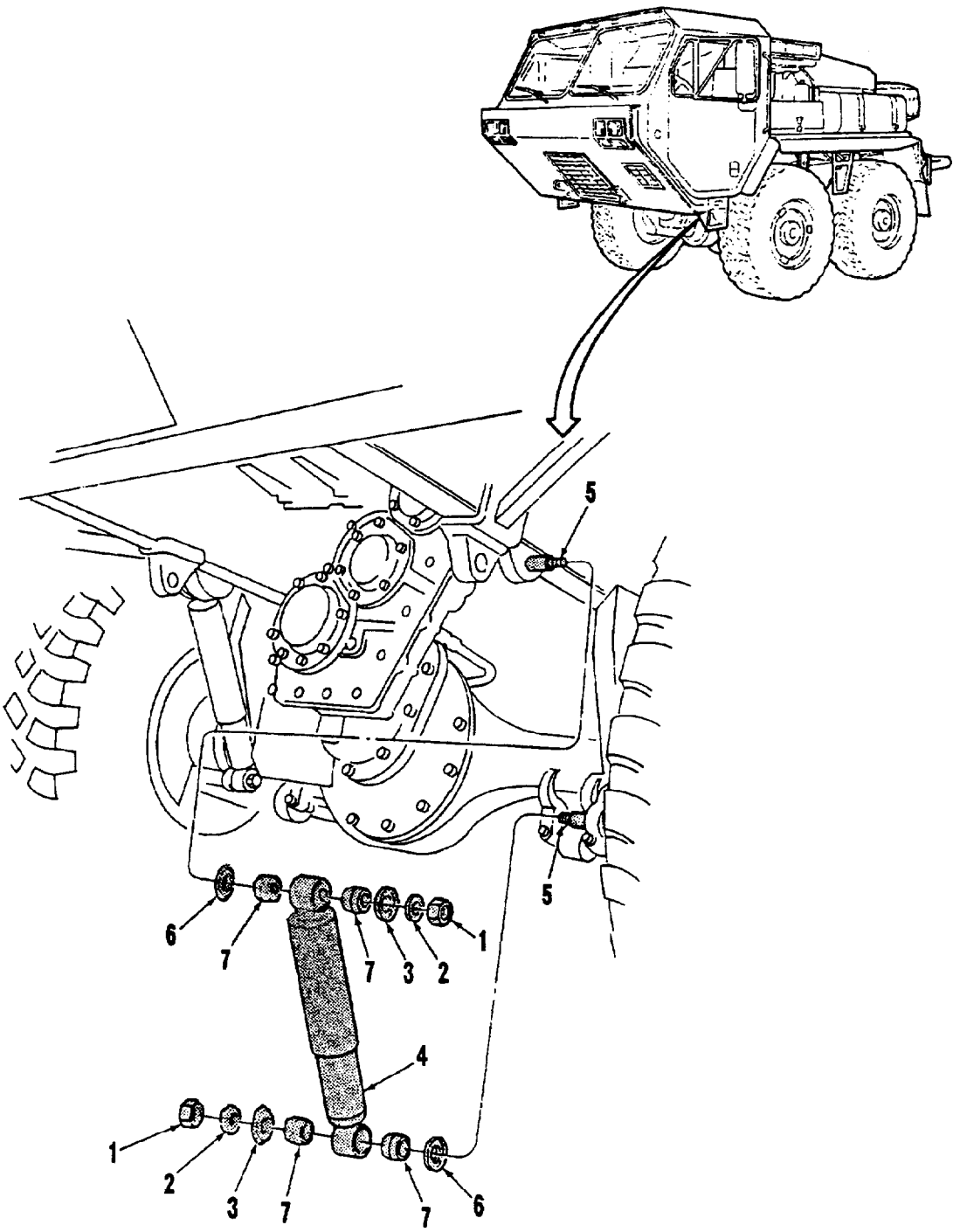

1. Locknut (2)
2. Hardened Washer (2)
3. Retainer (2)
4. Shock Absorber
5. Mounting Bracket (2)
6. Inner Retainer (2)
7. Rubber Bushing (4)

Figure 2-144. Shock Absorbers and Bushings

a. Upper Torque Rods

(1) Remove nut (1, Figure 2-145, Sheet 1 of 2), two washers (2), and capscrew (3) from two clamps (4).

(2) Remove two clamps (4) from upper front torque rod (5).

(3) Remove two locknuts (6), washers (7), capscrews (8), and washers (9) from axle housing (hsg) no. 1 (10) and upper front torque rod (5). Discard locknuts (6).

(4) Remove two locknuts (11), washers (12), capscrews (13), washers (14), and one end of upper front torque rod (5) from suspension bracket (15). Discard locknuts (11).

(5) Remove nut (16), two washers (17), and capscrew (18) from two clamps (19).

(6) Remove two clamps (19) from upper rear torque rod (20).

(7) Remove two locknuts (21), washers (22), capscrews (23), washers (24), and two hardened washer(s) (25) from axle housing no. 2 (26) and upper rear torque rod (20). Discard locknuts (21).

(8) Remove two locknuts (27), washers (28), capscrews (29), washers (30), and one end of upper rear torque rod (20) from suspension bracket (31). Discard locknuts (27).

b. Lower Torque Rods

(1) Remove two locknuts (32, Figure 2-145, Sheet 2 of 2), washers (33), capscrews (34), and washers (35) from axle housing no. 1 (10) and one end of lower front torque rod (36). Discard locknuts (32).

(2) Remove two capscrews (37), washers (38), lower front torque rod (36), and hardened washer(s) (39) from suspension bracket (31).

(3) Repeat steps (1) and (2) for opposite lower front torque rod.

(4) Remove two locknuts (40), washers (41), capscrews (42), washers (43), and hardened washer(s) (44) from axle housing no. 2 (26) and one end of lower rear torque rod (45). Discard locknuts (40).

(5) Remove two capscrews (46), washers (47), lower rear torque rod (45), and hardened washer(s) (48) from suspension bracket (31).

(6) Repeat steps (4) and (5) for opposite lower rear torque rod.

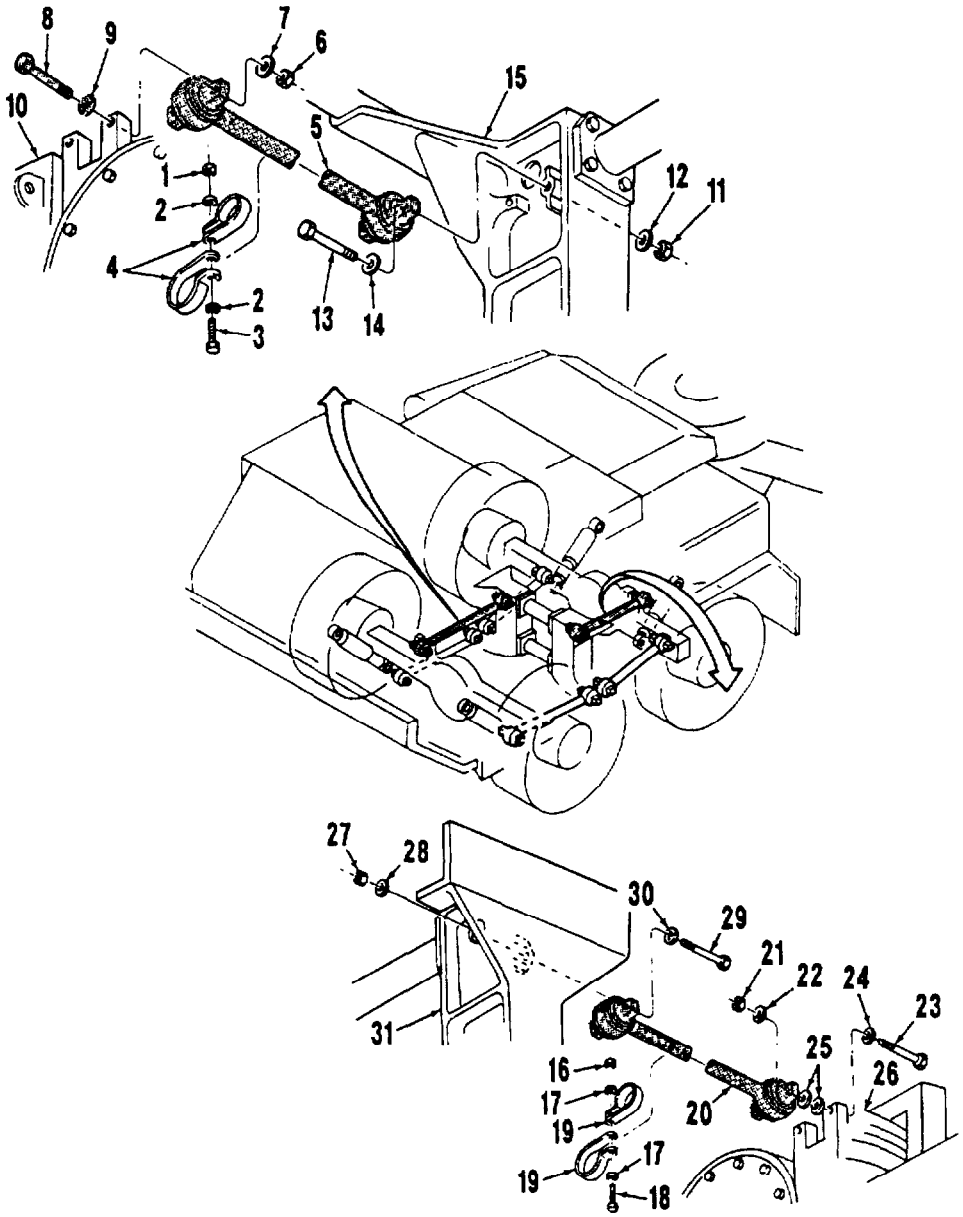

1. Nut
2. Washer (2)
3. Capscrew
4. Clamp (2)
5. Upper Front Torque Rod
6. Locknut (2)
7. Washer (2)
8. Capscrew (2)
9. Washer (2)
10. Axle Housing No. 1
11. Locknut (2)
12. Washer (2)
13. Capscrew (2)
14. Washer (2)
15. Suspension Bracket
16. Nut
17. Washer (2)
18. Capscrew
19. Clamp (2)
20. Upper Rear Torque Rod
21. Locknut (2)
22. Washer (2)
23. Capscrew (2)
24. Washer (2)
25. Hardened Washer(s)
26. Axle Housing No. 2
27. Locknut (2)
28. Washer (2)
29. Capscrew (2)
30. Washer (2)
31. Suspension Bracket

Figure 2-145. Torque Rods (Sheet 1 of 2)

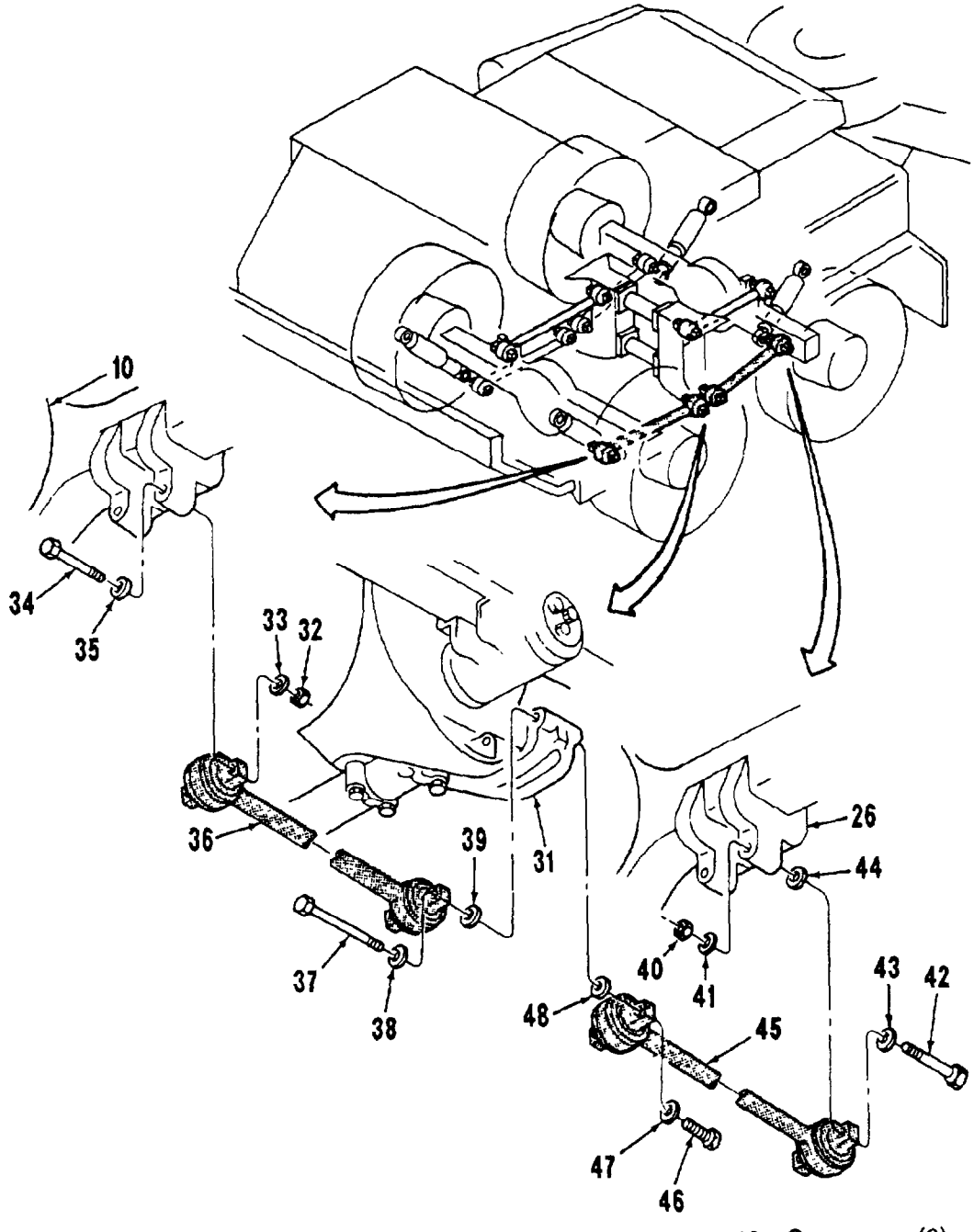

10. Axle Hsg No. 1
26. Axle Hsg No. 2
31. Suspension Brkt
32. Locknut (2)
33. Washer (2)
34. Capscrew (2)
35. Washer (2)
36. Lower Front Torque Rod
37. Capscrew (2)
38. Washer (2)
39. Hardened Washer(s)
40. Locknut (2)
41. Washer (2)
42. Capscrew (2)
43. Washer (2)
44. Hardened Washer(s)
45. Lower Rear Torque Rod
46. Capscrew (2)
47. Washer (2)
48. Hardened Washer(s)

Figure 2-145. Torque Rods (Sheet 2 of 2)

2-131. AXLE ASSEMBLY NO. 1

a. Axle Assembly No. 1

WARNING

Axle assembly no. 1 is very awkward to handle due to the weight of the nose box which causes axle assembly no. 1 to be extremely front-heavy. Use a differential jack that will support the nose box on axle assembly no. 1 and prevent it from falling forward during removal procedures. To prevent possible serious injury to personnel and damage to equipment, be extremely careful when removing axle assembly no. 1.

Axle assembly no. 1 is heavier on left side. To prevent personal injury or possible damage to equipment, axle assembly no. 1 must be chained to differential jack to be properly supported and balanced.

NOTE

Remove nylon ties as needed. Note location for replacement during assembly.

Tag all air lines to ensure proper installation.

For this procedure, torque rods were removed previously. Refer to Paragraph 2-130.

Steps (1 and 2) work for both limiting chains and clevis'.

(1) Remove dowel pin (1, Figure 2-146, Sheet 1 of 2), spacer (4), and two clevis halves (2) from limiting chain (3).

(2) Remove nut (5), lockwasher (6), capscrew (7), and washers (8) from two clamps (9) and bracket (9A). Discard lockwasher (6).

(3) Remove clamps (9) from bracket (9A) and air lines (10).

(4) Disconnect air line (10) from 90° elbow (11).

(5) Remove cotter pin (12), castellated nut (13), and drag link (14) from steering arm (15). Discard cotter pin (12).

(6) Position two jack stands (not shown) under axle housing no. 2 (16) to keep springs (17) from moving during axle assembly no. 1 (18) removal.

(7) Remove air line (19, Figure 2-146, Sheet 2 of 2) from axle shift unit (20).

(8) Position differential jack (21) with nose box support (22) under axle assembly no. 1 (18) and secure with a chain.

(9) Raise axle assembly no. 1 (18) just enough to remove tension from springs (17).

(10) Move axle assembly no. 1 (18) forward until springs (17) are clear of spring mounts (24).

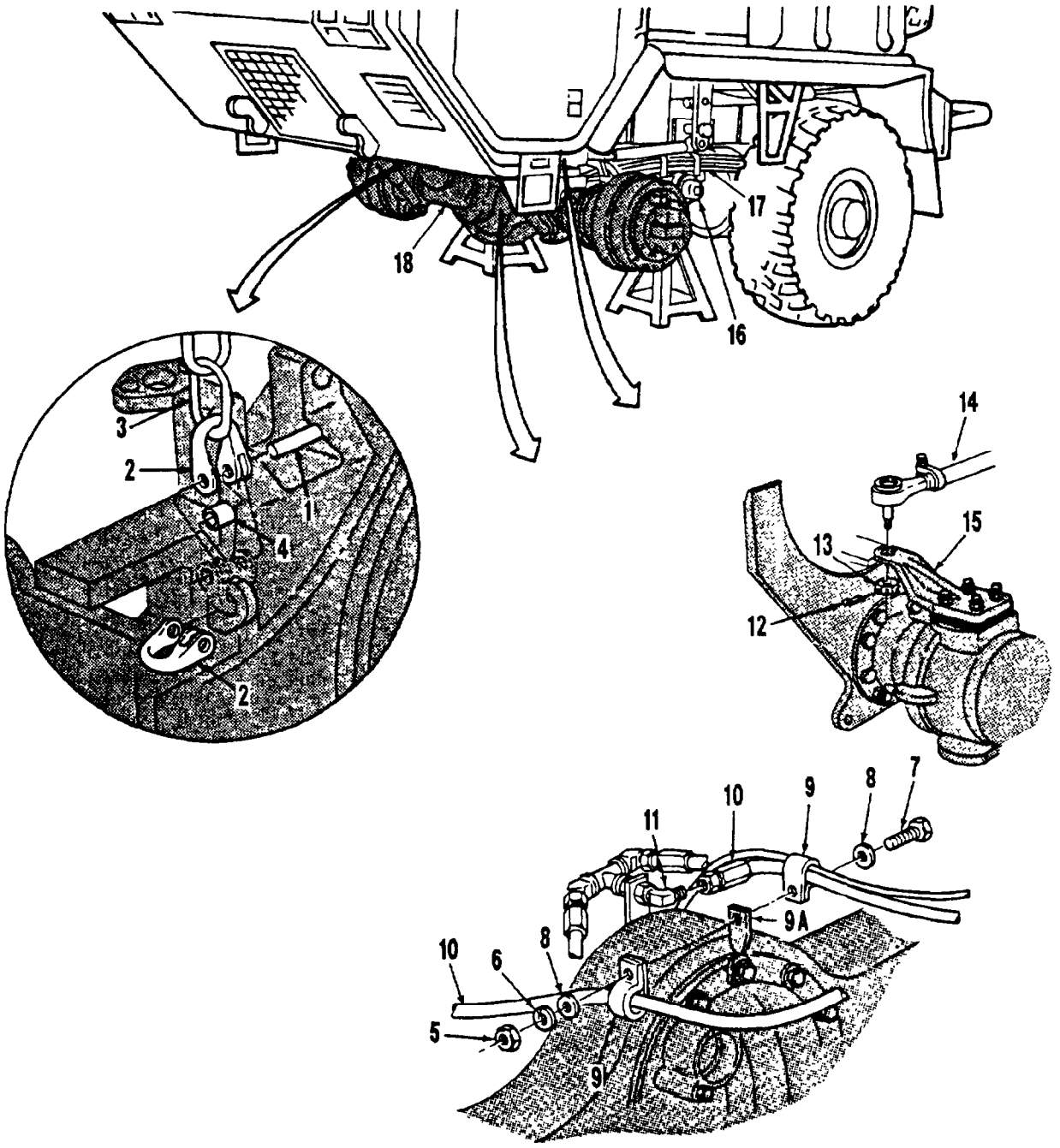

1. Dowel Pin (2)
2. Clevis Half (4)
3. Limiting Chain (2)
4. Spacer (2)
5. Nut
6. Lockwasher
7. Capscrew
8. Washer (2)
9. Clamp (2)
9A. Bracket
10. Air Line
11. 90° Elbow
12. Cotter Pin
13. Castellated Nut
14. Drag Link
15. Steering Arm
16. Axle Housing No. 2
17. Spring (2)
18. Axle Assembly No. 1

Figure 2-146. Axle Assembly No. 1 (Sheet 1 of 2)

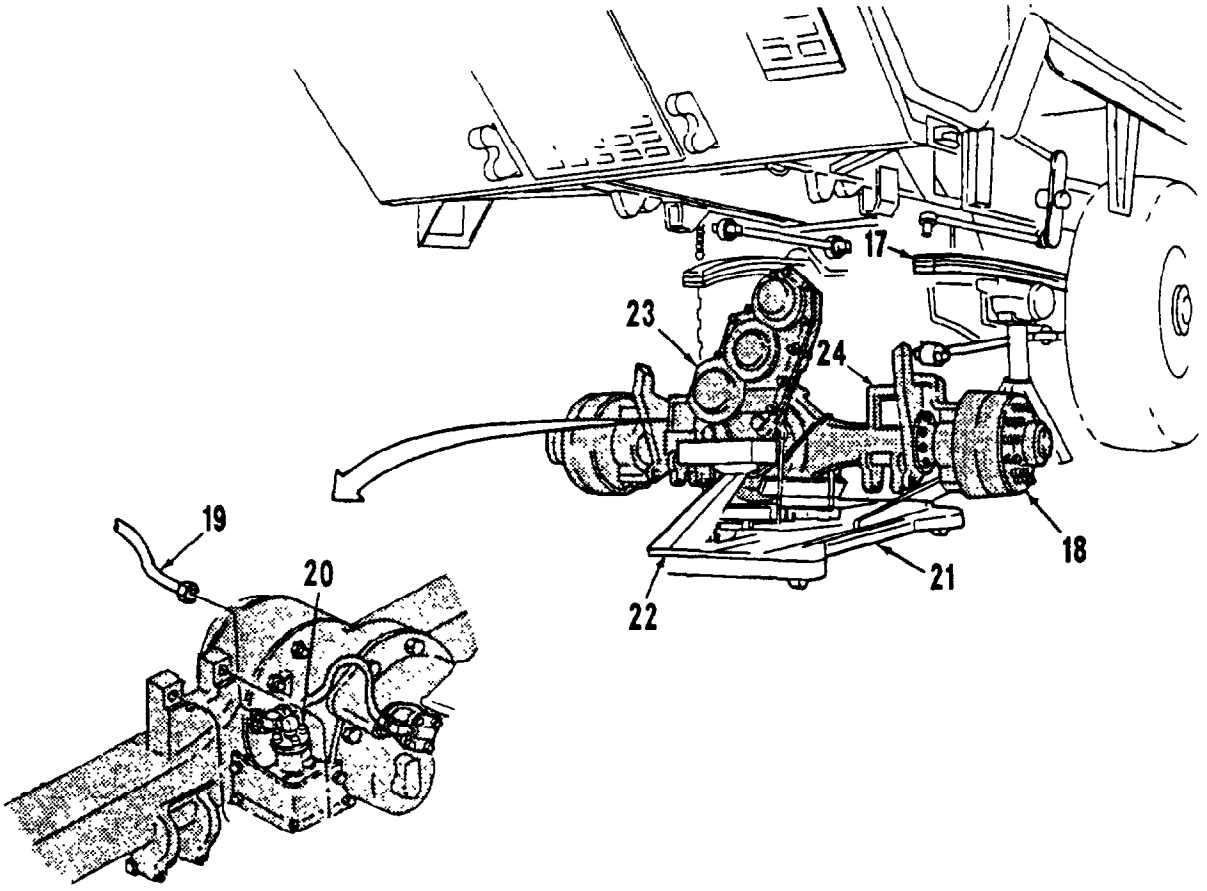

17. Spring (2)
18. Axle Assembly No. 1
19. Air Line
20. Axle Shift Unit
21. Differential Jack
22. Nose Box Support
23. Nose Box
24. Spring Mount (2)

Figure 2-146. Axle Assembly No. 1 (Sheet 2 of 2)

(11) Lower axle assembly no. 1 (18) and/or raise front of MK48 until nose box (23) will clear bottom of MK48.

(12) Remove axle assembly no. 1 (18) out from under MK48.

b. Hub and Drum Assembly and Wheel Bearings

(1) Loosen brake adjustment so that hub and drum assembly (1, Figure 2-147) will slide off easily.

(2) Remove ten nuts (2) and lockwashers (3) from hub cap (4). Discard lockwashers (3).

(3) Screw two capscrews (5) in hub cap (4). This will release hub cap (4) from hub (6).

(4) Remove hub cap (4) and capscrews (5) from hub (6).

(5) Position a floor jack under hub and drum assembly (1) and raise jack to support hub and drum assembly (1).

NOTE

Align notch in hub (6) to allow access to capscrew (7).

(6) Remove capscrew (7) and lockwasher (8) from wheel bearing (brg) nut (9). Discard lockwasher (8).

(7) Remove lock plate (10) from wheel bearing nut (9).

(8) Remove wheel bearing nut (9) using front wheel bearing nut wrench.

(9) Remove wheel bearing cone (11) and tag for later use.

WARNING

Hub and drum assembly is extremely heavy. To prevent serious injury, hub and drum assembly must not fall on personnel. Ensure hub and drum assembly is safely secured to floor jack.

(10) Remove hub and drum assembly (1) using floor jack.

c. Brake Shoes and Linings

WARNING

To prevent damage to lungs, respirator shall be worn when working with brake linings or other materials containing asbestos.

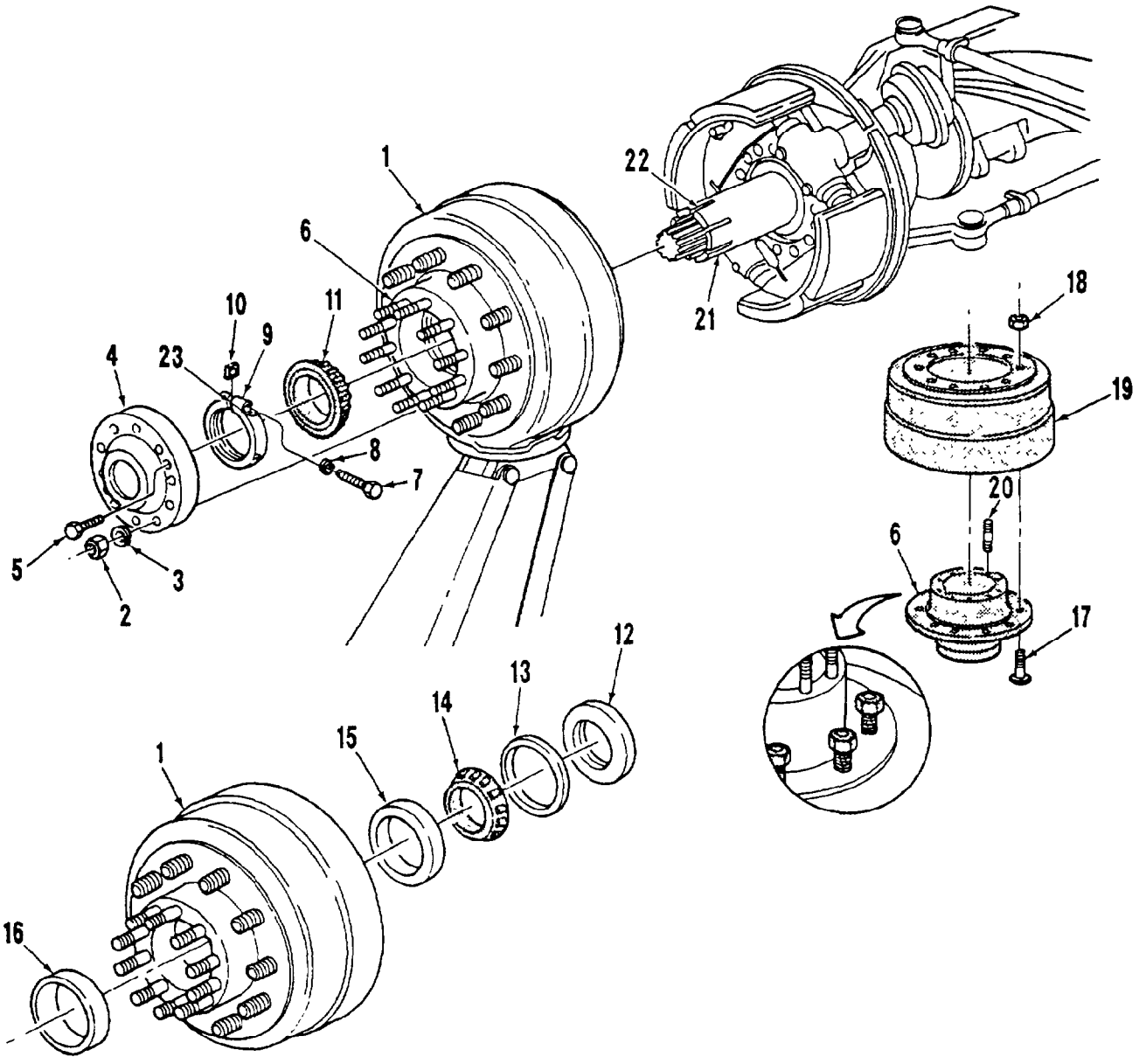

1. Hub and Drum Assembly
2. Nut (10)
3. Lockwasher (10)
4. Hub Cap
5. Capscrew (2)
6. Hub
7. Capscrew
8. Lockwasher
9. Wheel Brg Nut
10. Lock Plate
11. Bearing Cone
12. Oil Seal
13. Seal Spacer
14. Bearing Cone
15. Bearing Cup
16. Bearing Cup
17. Wheel Lug Stud (10)
18. Lug Nut (10)
19. Brake Drum
20. Stud (10)
21. Skein
22. Slot
23. Slot

Figure 2-147. Hub and Drum Assembly and Wheel Bearings
(Axle Assembly No. 1)

WARNING

Dispose of brake linings according to local, state, and federal regulations governing the disposal of asbestos or material containing asbestos.

NOTE

Hub, drum, and wheel bearings removed previously.

(1) Remove two cotter pins (1, Figure 2-148) and nuts (2) from screws (10). Discard cotter pins (1).

(2) Remove two washers (3) and springs (4) from screws (10).

(3) Remove two brake shoe retainer plates (5) from screws (10) and brake shoes (9).

(4) Back off adjusting bolts (6) to relieve spring pressure.

(5) Pry upper return spring (7) free of bracket (8).

(6) Carefully pry brake shoes (9) away from adjusting bolts (6).

(7) Pull outward until brake shoes (9) are clear of screws (10).

(8) Remove two brake shoe and lining assemblies (9) with upper and lower return springs (7 and 11) from brake spider (14).

(9) Remove upper and lower return springs (7 and 11) from brake shoe and lining assemblies (9). Discard springs (7 and 11).

d. Brake Chamber

WARNING

Air lines under pressure will move violently when removed. To prevent personal injury, drain all air pressure from system before removing pressurized components.

NOTE

Tag all air lines before removal to ensure proper installation.

Air line (1.1) and air fitting (3.1) are present on LVSA1 series vehicles only.

(1) Remove air lines (1 and 1.1, Figure 2-149) from fitting (3).

(2) Remove fittings (3 and 3.1) from brake chamber (2).

(3) Loosen collet nut (4) using a punch and hammer.

(4) Remove brake chamber (2) by turning it counterclockwise until it is free of plunger housing (6).

(5) Remove collet nut (4) from brake chamber (2).

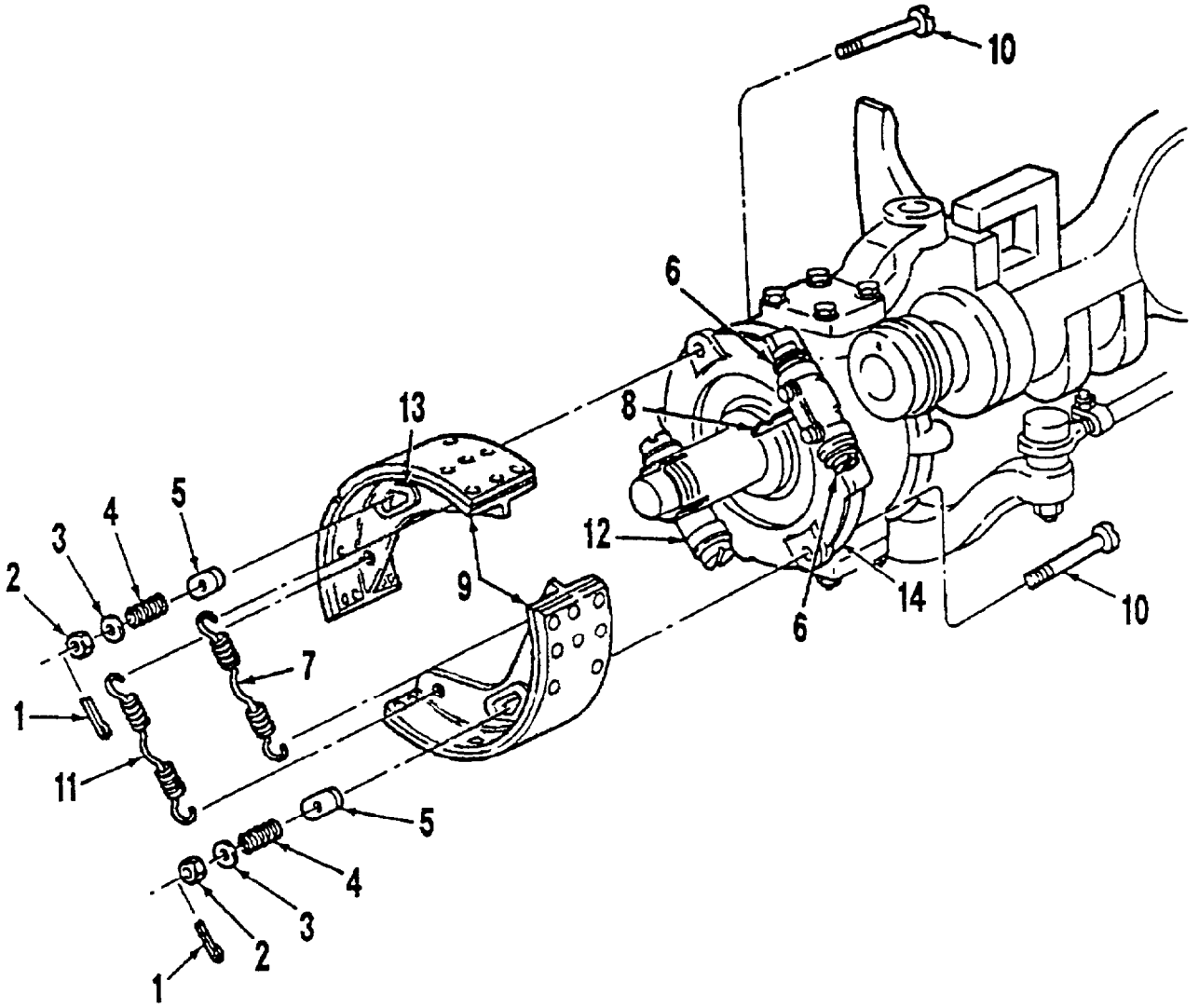

1. Cotter Pin (2)
2. Nut (2)
3. Washer (2)
4. Spring (2)
5. Retainer Plate (2)
6. Adjusting Bolt (2)
7. Upper Return Spring
8. Bracket
9. Brake Shoe and Lining Assembly (2)
10. Screw (2)
11. Lower Return Spring
12. Anchor Assembly
13. Triangle Opening
14. Brake Spider

Figure 2-148. Brake Shoes and Linings
(Axle Assembly No. 1)

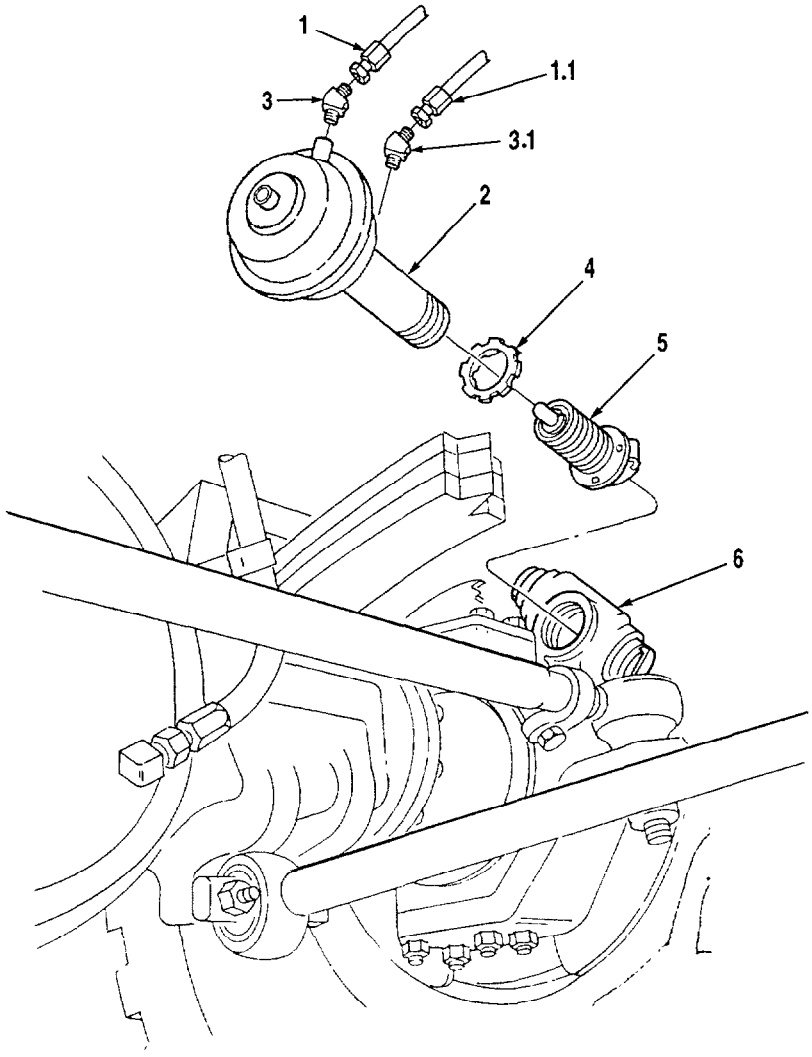

1. Air Line
1.1. Air Line*
2. Brake Chamber
3. Fitting
3.1. Fitting*
4. Collet Nut
5. Wedge Assembly
6. Plunger Housing

* LVSA1 Series Vehicles Only

Figure 2-149. Brake Chamber
(Axle Assembly No. 1)

NOTE

Note position of wedge assembly before removal to ensure proper installation.

(6) Remove wedge assembly (5) from brake chamber (2).

e. Plunger Assemblies (Actuating and Anchor)

NOTE

Wedge assembly (1, Figure 2-150) and wedge shaft (24) removed previously.

(1) Bend tab on locking plate (3) and remove capscrew (4), spring (5), and adjusting pawl (6) from actuating plunger housing (2).

(2) Remove retainer (7) and detent washer (8) from adjusting bolt (10).

(3) Remove snapring (9) from retainer (7).

(4) Remove adjusting bolt (10), plunger seal (11), and adjusting sleeve (12) from actuating plunger housing (2).

(5) Turn adjusting bolt (10) in adjusting sleeve (12) until snapring (13) can be removed and remove snapring (13) from adjusting bolt (10).

(6) Remove adjusting bolt (10) from adjusting sleeve (12).

(7) Remove plunger seal (11) from adjusting bolt (10). Discard plunger seal (11).

(8) Remove adjusting plunger (14) from actuating plunger housing (2).

(9) Bend tab on locking plate (15) and remove capscrew (16) from anchor plunger housing (19).

NOTE

Tag left and right anchor plungers to ensure proper installation.

(10) Remove left and right anchor plungers (17 and 18) from anchor plunger housing (19).

f. Brake Spider and Skein

(1) Brake Spider

(a) Remove 12 locknuts (1, Figure 2-151) and washers (2) from studs (3). Discard locknuts (1).

(b) Remove two capscrews (4), washers (5), and bracket (6) from axle ball socket assembly (13) and brake spider (7).

(c) Remove brake spider (7) from axle ball socket assembly (13).

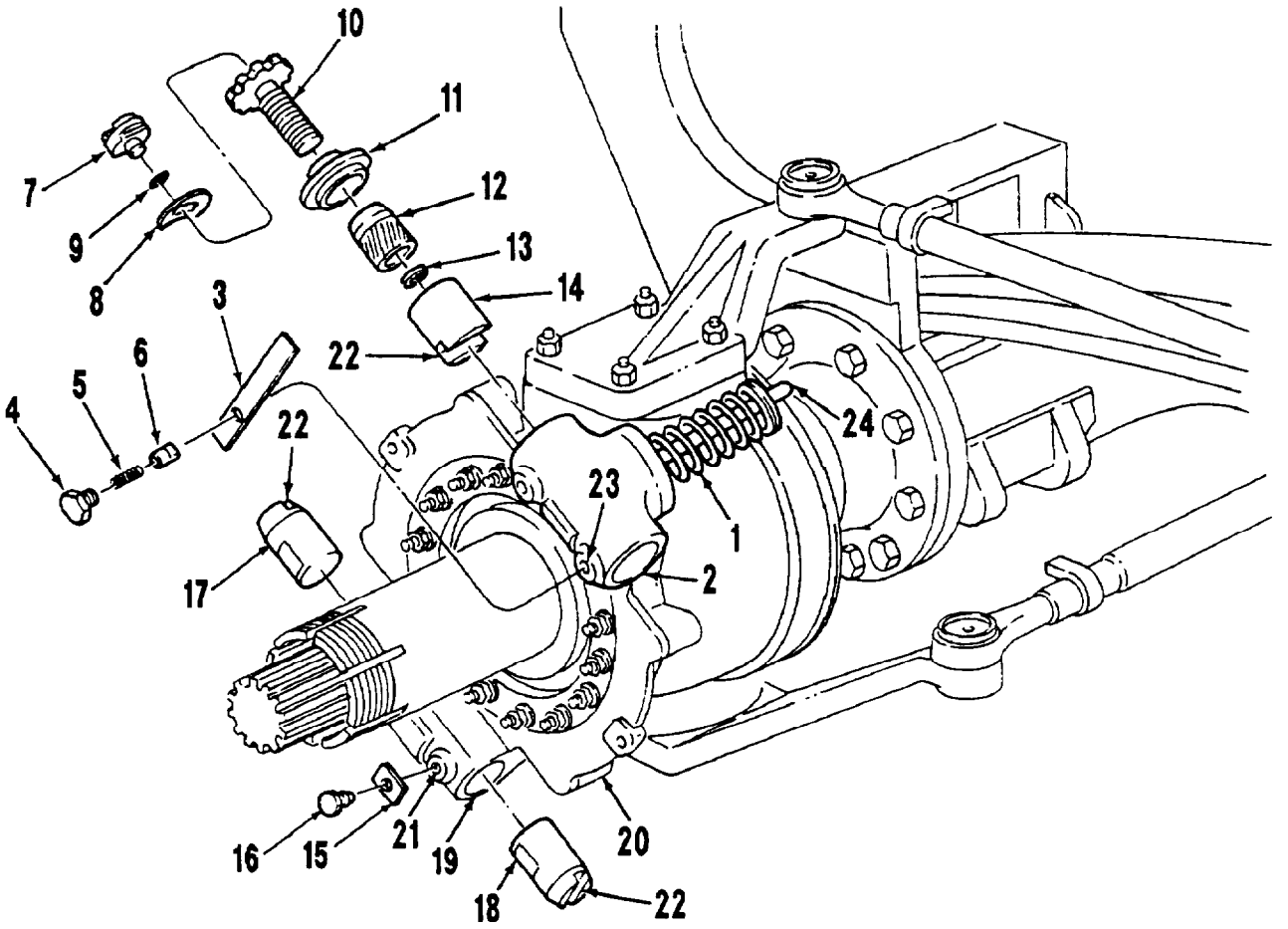

1. Wedge Assembly
2. Actuating Plunger Hsg
3. Locking Plate
4. Capscrew
5. Spring
6. Adjusting Pawl
7. Retainer
8. Detent Washer
9. Snapring
10. Adjusting Bolt
11. Plunger Seal
12. Adjusting Sleeve
13. Snapring
14. Adjusting Plunger
15. Locking Plate
16. Capscrew
17. Left Anchor Plunger
18. Right Anchor Plunger
19. Anchor Plunger Hsg
20. Brake Spider
21. Capscrew Hole
22. Slot
23. Capscrew Hole
24. Wedge Shaft

Figure 2-150. Plunger Assemblies (Actuating and Anchor)
Axle Assembly No. 1

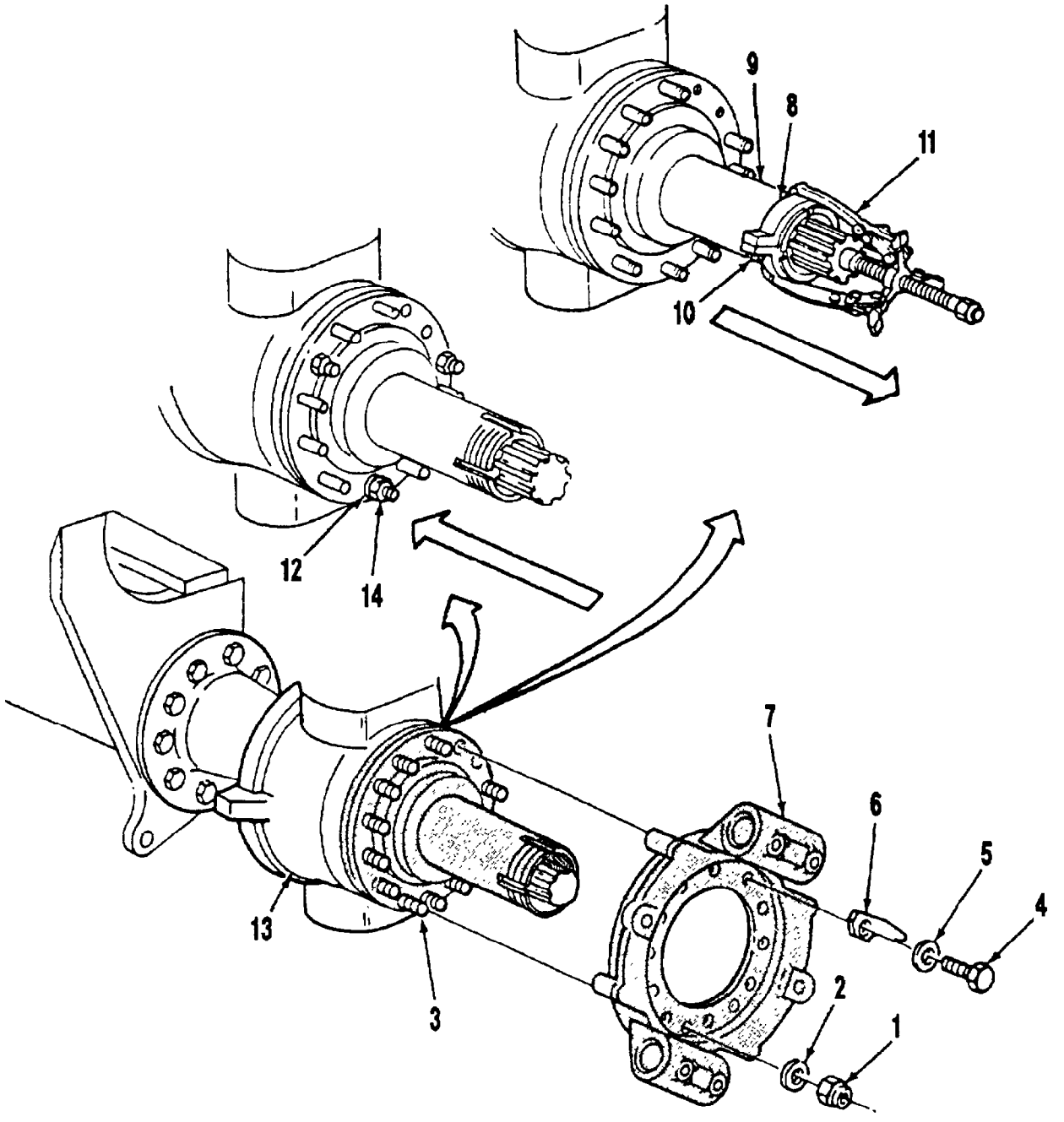

1. Locknut (12)
2. Washer (12)
3. Stud (12)
4. Capscrew (2)
5. Washer (2)
6. Bracket
7. Brake Spider
8. Wheel Bearing Locknut
9. Skein
10. Capscrew
11. Three-Jaw Puller
12. Washer (9)
13. Axle Ball Socket Assembly
14. Nut (3)

Figure 2-151. Brake Spider and Skein
(Axle Assembly No. 1)

(2) Skein

(a) Install wheel bearing locknut (8) on skein (9).

(b) Install capscrew (10) in wheel bearing locknut (8). Tighten capscrew (10) securely.

CAUTION

To prevent damage to skein during removal, pull skein straight off axle ball socket assembly using a puller.

(6) Remove skein (9), using three-jaw puller (11), from axle ball socket assembly (13).

g. Axle Shaft Assembly

WARNING

The axle shaft assembly is heavy. To prevent personal injury, have assistant(s) help remove axle shaft assembly from axle ball socket assembly.

NOTE

This procedure works for both axle shafts.

(1) Position axle ball socket assembly (2, Figure 2-152) as shown.

(2) Pull axle shaft assembly (1) straight out from axle ball socket assembly (2). Be careful not to damage oil seal (3).

h. Tie Rod and Axle Ball Socket Wiper Seal

WARNING

The tie rod is heavy. To prevent personal injury, have assistant(s) help remove tie rod from under vehicle.

(1) Tie Rod

(a) Remove cotter pin (1, Figure 2-153) from castellated nut (2) and tie rod end (3). Discard cotter pin (1).

(b) Remove castellated nut (2) from tie rod end (3).

(c) Remove tie rod end (3) from tie rod arm (4).

(d) Repeat steps (a through c) above for other end of tie rod (5).

(e) Remove tie rod (5) from under vehicle.

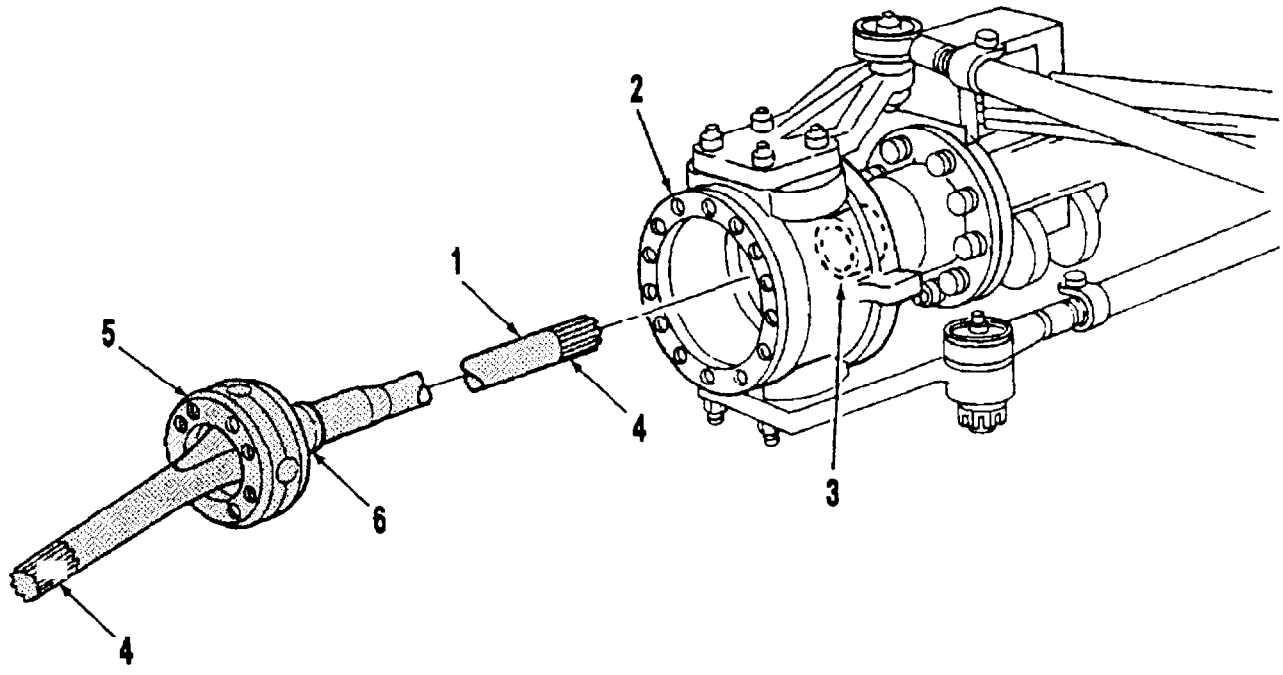

1. Axle Shaft Assembly
2. Axle Ball Socket Assembly
3. Oil Seal
4. Splines
5. Cage Ring
6. Oil Seal Surface

Figure 2-152. Axle Shaft (Axle Assembly No. 1)

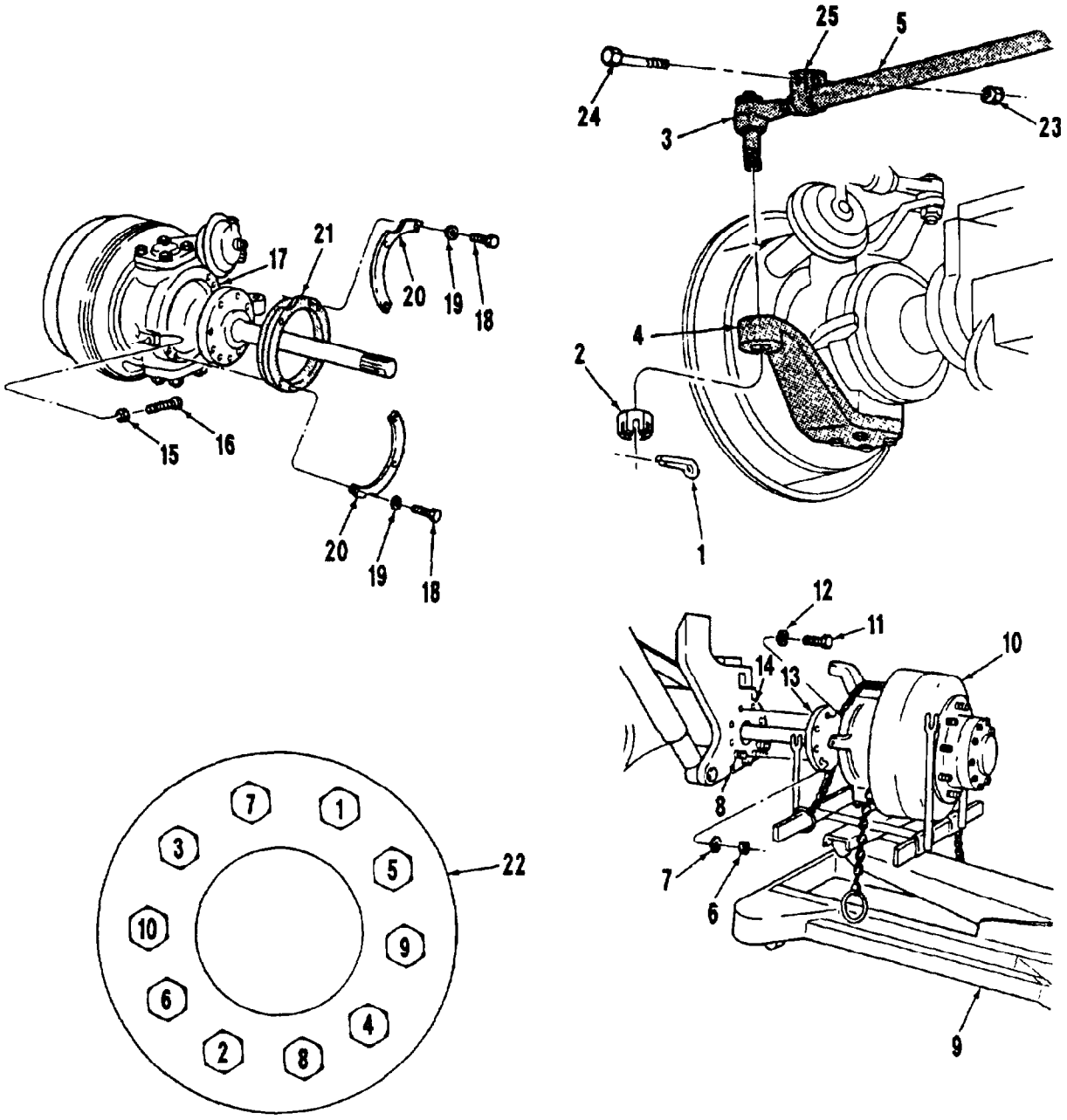

1. Cotter Pin
2. Castellated Nut
3. Tie Rod End
4. Tie Rod Arm
5. Tie Rod
6. Nut (4)
7. Washer (4)
8. Stud (4)
9. Transmission Jack
10. Axle Ball Socket Assembly
11. Capscrew (6)
12. Washer (6)
13. Axle Ball
14. Axle Housing
15. Nut
16. Steering Stop Capscrew
17. Axle Ball Socket Hsg
18. Capscrew (6)
19. Lockwasher (6)
20. Retainer Half (2)
21. Axle Ball Socket Wiper Seal
22. Torque Pattern
23. Locknut
24. Capscrew
25. Clamp

Figure 2-153. Tie Rod and Axle Ball Socket Wiper Seal (Axle Assembly No. 1)

(2) Axle Ball Socket Wiper Seal

WARNING

The axle ball socket is very heavy. To prevent personal injury, secure axle ball socket to transmission jack when removing axle ball socket from axle housing.

(a) Remove four nuts (6, Figure 2-153) and washers (7) from studs (8).

(b) Position transmission jack (9) under axle ball socket assembly (10).

(c) Remove six capscrews (11) and washers (12) from axle housing (14) and axle ball (13).

(d) Separate axle ball socket assembly (10) from axle housing (14).

(e) Remove nut (15) and steering stop capscrew (16) from axle ball socket housing (17).

(f) Remove six capscrews (18), lockwashers (19), and two retainer halves (20). Discard lockwashers (19).

(g) Remove axle ball socket wiper seal (21) from axle ball socket housing (17). Discard axle ball socket wiper seal (21).

i. Axle Ball Socket and Trunnion Bearings. Refer to TM 2320-34/13 for removal of axle ball socket and trunnion bearings.

2-132. AXLE ASSEMBLY NO. 2

a. Axle Assembly No. 2

NOTE

Torque rods removed previously. Refer to Paragraph 2-130.

Tag all air lines before removal to ensure proper installation.

(1) Remove dowel pin (1, Figure 2-154, Sheet 1 of 2), two clevis halves (2), and spacer (3).

(2) Remove two air lines (4 and 5) from left brake chamber (6).

(3) Remove two air lines (7 and 8) from right brake chamber (9).

(4) Remove air line (10) from axle shift unit (11).

(5) Remove nut (12), lockwasher (13), and bracket (14) from axle housing (15) and axle housing stud (16).

(6) Install lockwasher (13) and nut (12) back on axle housing stud (16).

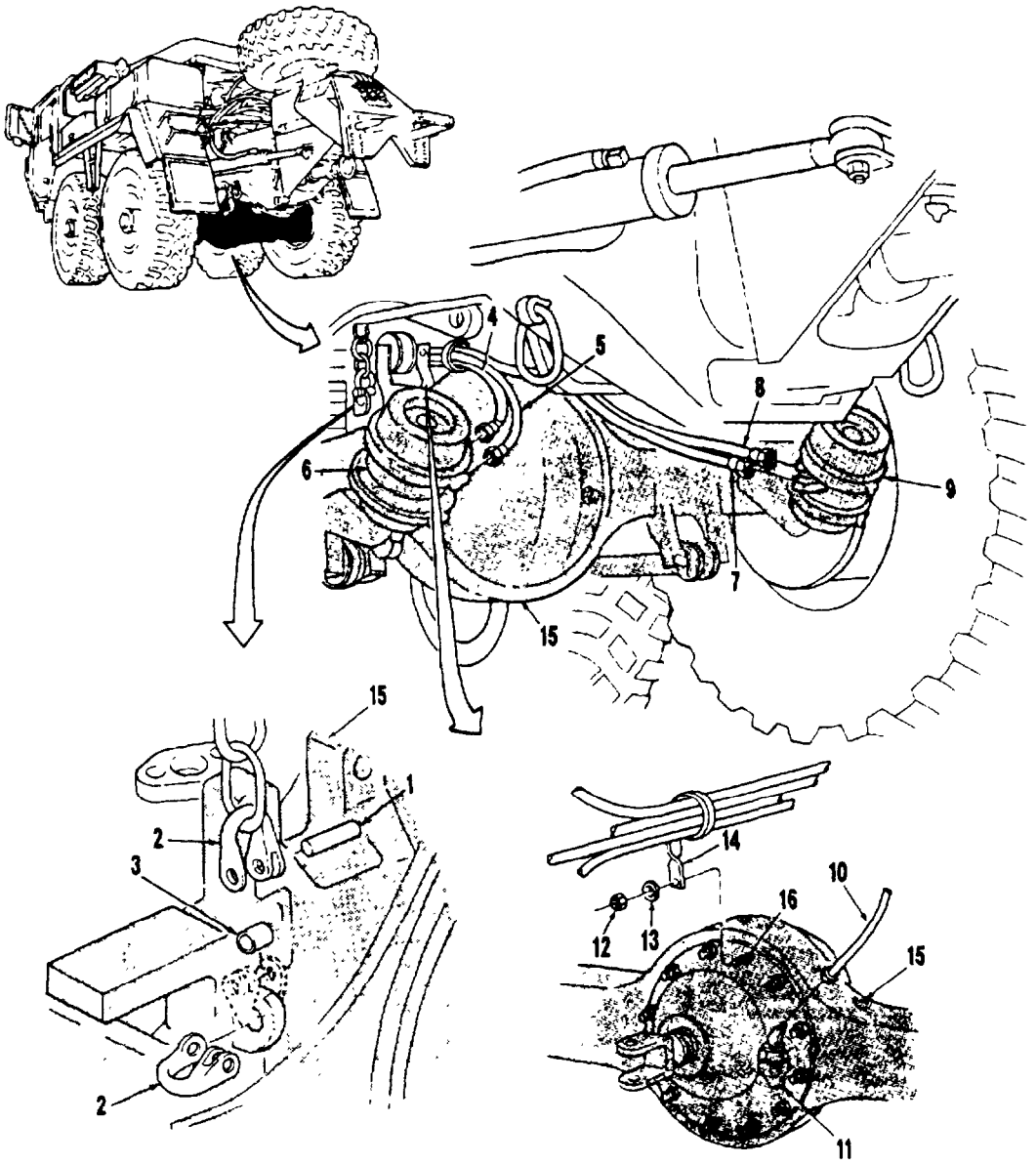

1. Dowel Pin (2)
2. Clevis Half (4)
3. Spacer (2)
4. Air Line
5. Air Line
6. Left Brake Chamber
7. Air Line
8. Air Line
9. Right Brake Chamber
10. Air Line
11. Axle Shift Unit
12. Nut
13. Lockwasher
14. Bracket
15. Axle Housing
16. Axle Housing Stud

Figure 2-154. Axle Assembly No. 2 (Sheet 1 of 2)

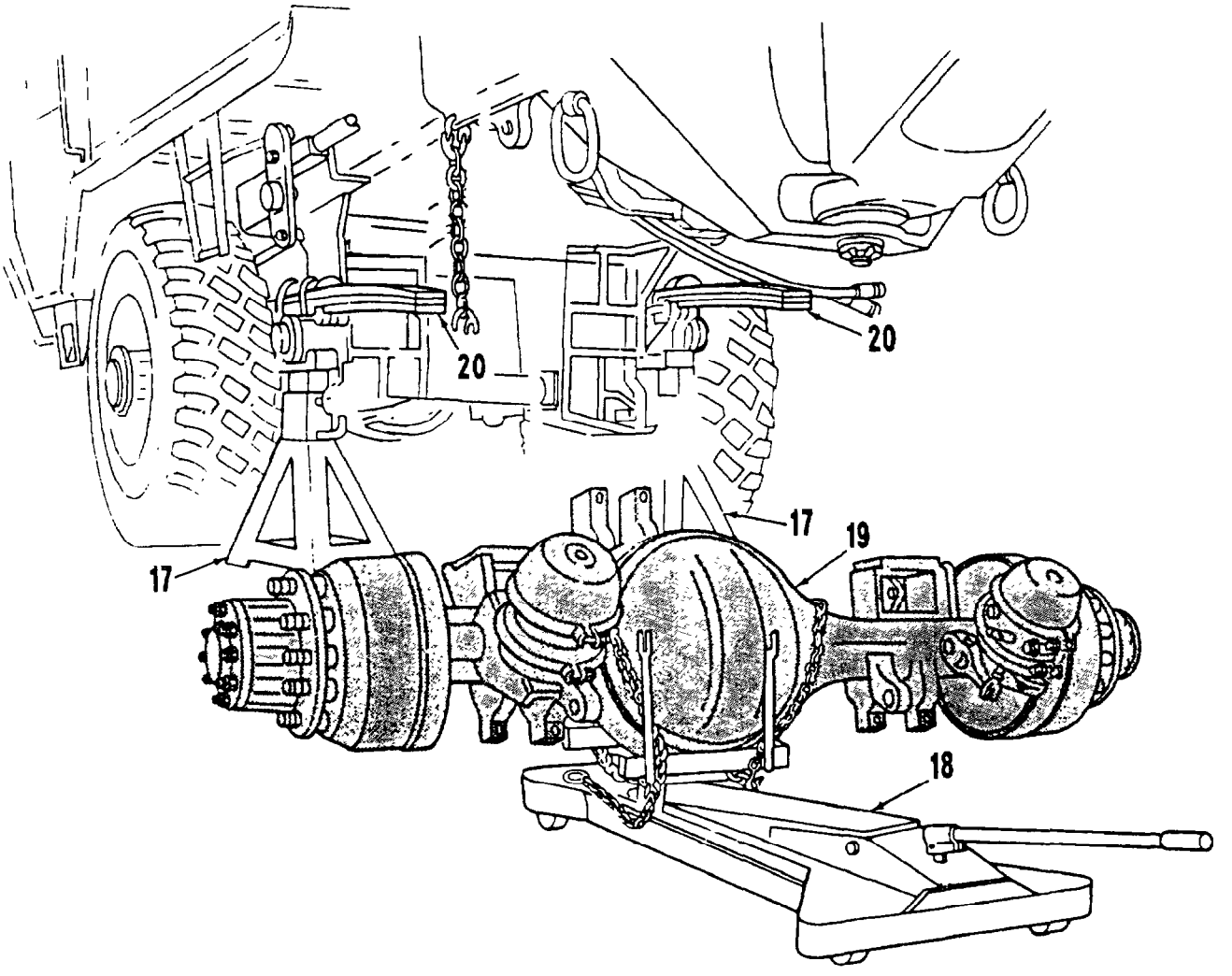

17. Jack Stand (2)
18. Differential Jack
19. Axle Assembly No. 2
20. Spring (2)

Figure 2-154. Axle Assembly No. 2 (Sheet 2 of 2)

NOTE

Two jack stands (17, Figure 2-154, Sheet 2 of 2) should still be under axle assembly no. 2 from axle assembly no. 1 removal procedure.

(7) Attach differential jack (18) to axle assembly no. 2 (19).

(8) Raise axle assembly no. 2 (19) high enough until weight is off springs (2) and two jack stands (17).

(9) Remove jack stands (17) from under axle assembly no. 2 (19).

(10) Move axle assembly no. 2 (19) toward rear of MK48 until free of springs (20).

(11) Lower axle assembly no. 2 (19) and remove it from under MK48.

b. Brake Chamber

WARNING

The brake chamber contains a spring under great pressure. To prevent personal injury or death, never work directly behind the brake chamber. Cage spring before removing brake chamber. If caging bolt will not engage properly, spring may be broken.

Air lines under pressure will move violently when removed. To prevent personal injury, drain all air pressure from system before removing pressurized components.

If brake chamber is clogged with mud, sand, or dirt, do not proceed with spring caging operation. To prevent personal injury, brake chamber must be cleared before spring caging operation.

NOTE

Brake chambers have changed to a new style with a crimped ring around the parking brake section of the chamber rather than a bolt together ring. When repairing a non-A1 vehicle, use the new style chamber to replace the old style chamber. Refer to TM 9-2320-297-24P for correct part identification.

(1) Remove caging bolt (1, Figure 2-155), nut (2), and washer (3) from side of brake chamber (4).

(2) Remove dust cap (5) from caging bolt hole in brake chamber (4).

NOTE

T-end must engage keyway inside brake chamber (4).

(3) Insert T-end of caging bolt (1) in hole in the back of brake chamber (4).

(4) Turn caging bolt (1) clockwise until it stops (about 1/4 turn).

(5) With caging bolt (1) properly inserted in brake chamber (4), install washer (3) and nut (2) on caging bolt (1).

1. Caging Bolt
2. Nut
3. Washer
4. Brake Chamber
5. Dust Cap
6. Clevis
7. Air Line (2)
8. Air Fitting (2)
9. Cotter Pin
10. Pin
11. Locknut (2)*
12. Washer (2)
13. Bracket
14. Stud (2)
15. Slot (2)

* LVSA1 Series Vehicles Only

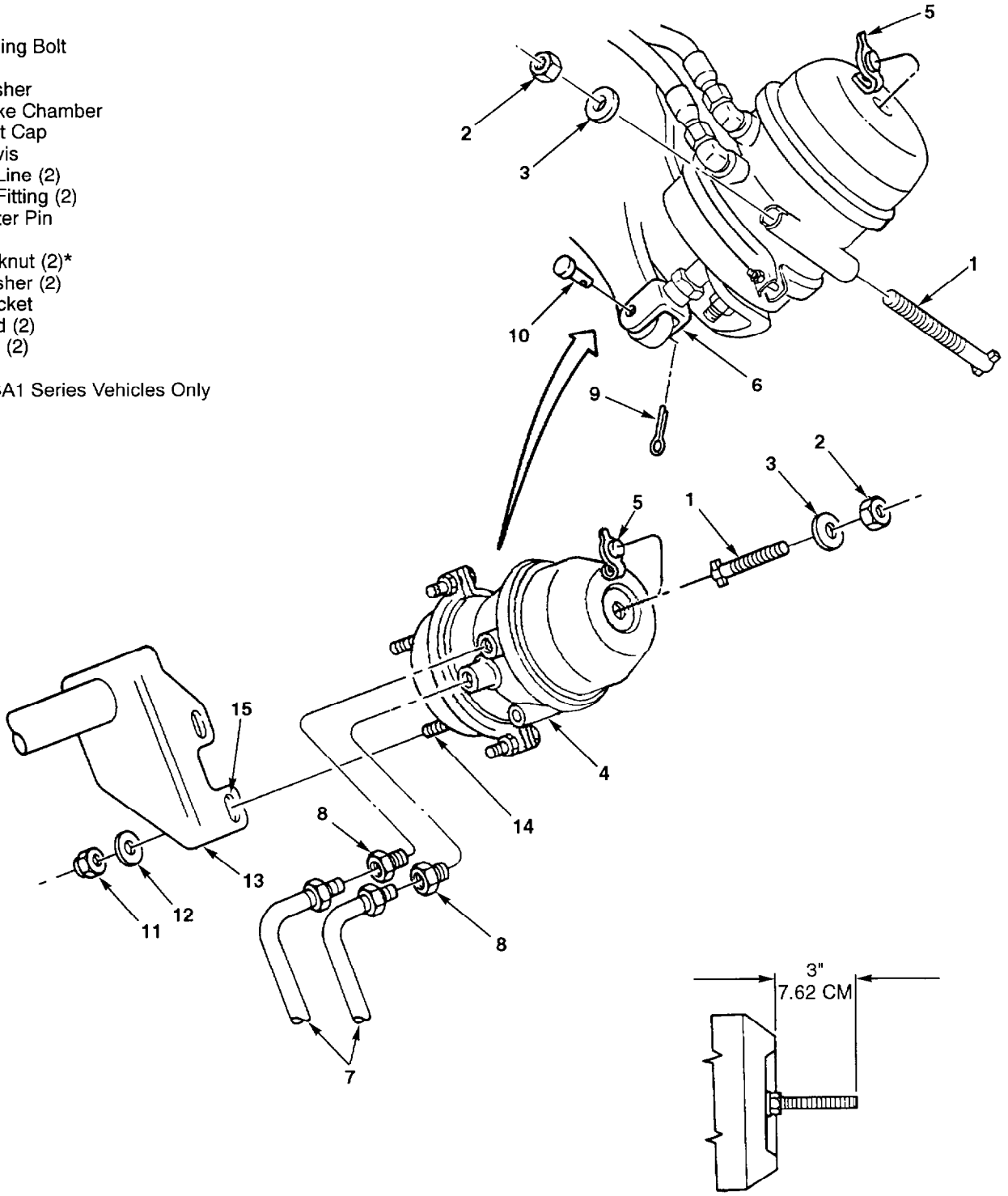

Figure 2-155. Brake Chamber (Axle Assembly No. 2)

NOTE

When properly inserted, caging bolt cannot be pulled out of brake chamber.

When spring is fully caged, caging bolt (1) will stick out 3 inches (7.62 cm).

If unable to cage spring properly, tension on push rod may be be released by backing off adjuster.

Tag all air lines to ensure proper installation.

Watch clevis (6), it must retract while nut (2) is being tightened. Do not torque nut (2) beyond 50 foot-pounds (ft-lb) (67 Newton Meters (N·m)).

(6) Tighten nut (2) until spring is fully caged.

(7) Remove two air lines (7) and air fittings (8) from brake chamber (4).

(8) Remove cotter pin (9) from pin (10) and remove pin (10) from clevis (6). Discard cotter pin (8).

(9) Remove two locknuts (11), washers (12), and brake chamber (4) with studs (14) from bracket (13). Discard locknuts (11).

c. Axle Shaft

(1) Remove eight nuts (1, Figure 2-156) and washers (2) from studs (7).

WARNING

To prevent personal injury, wear eye protection for the following step.

(2) Strike center of axle shaft (3) with a sledgehammer.

(3) Remove eight dowels (4) from studs (7).

(4) Remove axle shaft (3) by sliding it off studs (7) away from hub (6).

(5) Remove gasket (5) from hub (6). Discard gasket (5).

d. Hub and Drum Assembly and Wheel Bearings

(1) Straighten tabs on nut lock (1, Figure 157).

(2) Remove outer nut (2) using axle bearing nut wrench.

(3) Remove nut lock (1) from skein (16). Discard nut lock (1).

(4) Remove inner nut (3) from skein (16).

(5) Remove outer bearing cone (4) from skein (16).

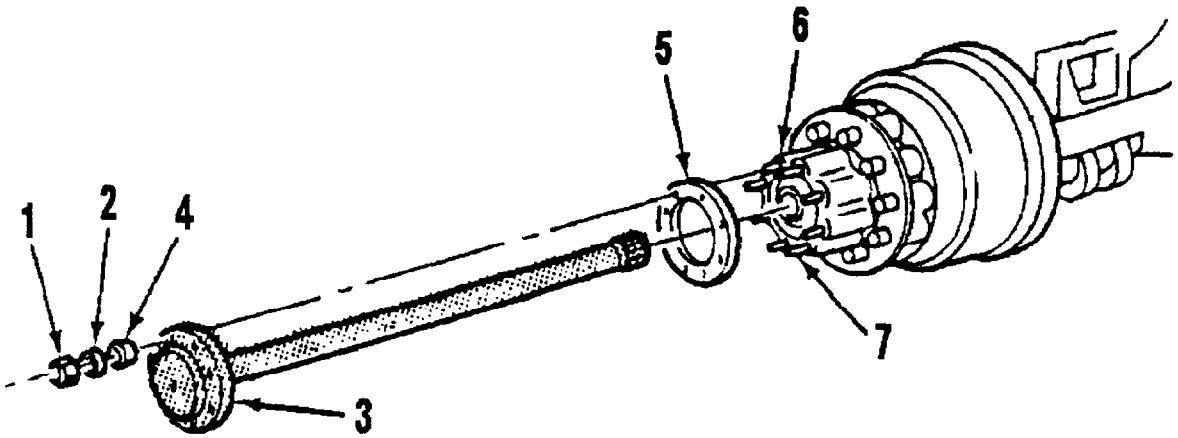

1. Nut (8)
2. Washer (8)
3. Axle Shaft
4. Dowel (8)
5. Gasket
6. Hub
7. Studs (8)

Figure 2-156. Axle Shaft (Axle Assembly No. 2)

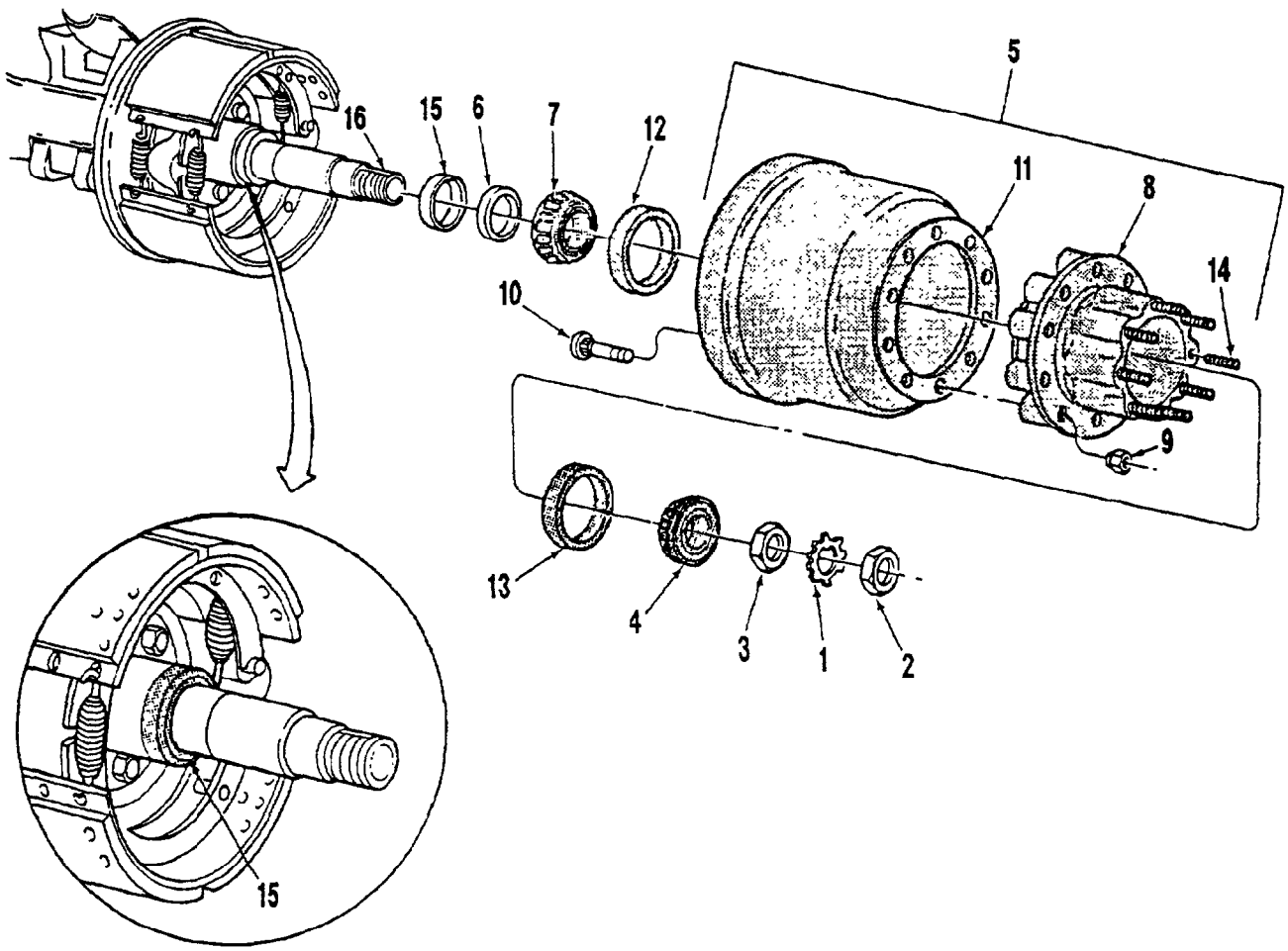

1. Nut Lock
2. Outer Nut
3. Inner Nut
4. Outer Bearing Cone
5. Hub and Drum Assembly
6. Seal
7. Inner Bearing Cone
8. Hub
9. Lug Nut (10)
10. Stud (10)
11. Drum
12. Bearing Cup
13. Bearing Cup
14. Stud (8)
15. Wear Sleeve
16. Skein

Figure 2-157. Hub and Drum Assembly and Wheel Bearings
(Axle Assembly No. 2)

WARNING

Hub and drum assembly is extremely heavy. To prevent serious injury, hub and drum assembly must not fall on personnel. Ensure hub and drum assembly is safely secured to floor jack.

(6) Position and raise a floor jack under hub and drum assembly (5) for support.

(7) Remove hub and drum assembly (5) from skein (16).

NOTE

Seals on LVSA1 number two axles have changed from a wear sleeve and oil seal to an oil seal only. When repairing non-A1 vehicles, use the new hardware to replace the old hardware. Refer to TM 9-2320-297-24P for correct parts identification.

(8) Remove wear sleeve (15), oil seal (6), and inner bearing cone (7) from hub (8).

(9) Install ten lug nuts (9) on studs (10) until outside edge of lug is even with end of stud (10).

(10) Drive ten studs (10) out of hub (8).

(11) Separate hub (8) and drum (11).

(12) Remove bearing cups (12 and 13) from hub (8) if needed.

(13) Remove eight studs (14) if hub (8) will be replaced.

e. Brake Shoes and Linings

WARNING

To prevent damage to lungs, respirator shall be worn when working with brake linings or other materials containing asbestos.

Dispose of brake linings according to local, state, and federal regulations governing the disposal of asbestos or material containing asbestos.

NOTE

Axle shaft, hub, and drum must be removed before brake shoes and linings can be replaced.

(1) Carefully pry brake shoe and lining assemblies (1 and 2, Figure 2-158) away from S-cam (3), brake spider (8), and anchor pin (9).

(2) Remove two rollers (4) and pins (5).

(3) Lift brake shoe and lining assembly (2) and remove spring (6). Discard spring (6).

(4) Remove brake shoe and lining assemblies (1 and 2) from brake spider (8).

(5) Place brake shoe and lining assemblies (1 and 2) on floor and remove two springs (7). Discard springs (7).

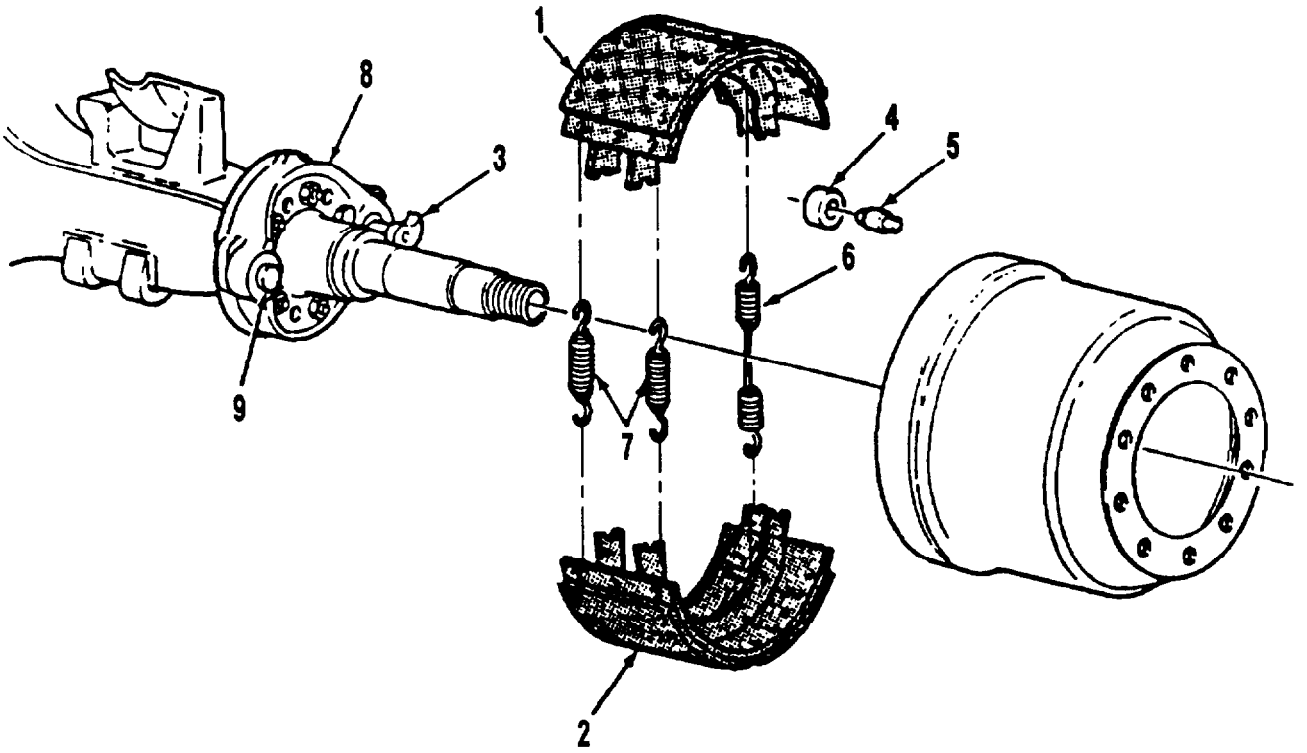

1. Brake Shoe and Lining Assembly
2. Brake Shoe and Lining Assembly
3. S-Cam
4. Roller (2)
5. Pin (2)
6. Spring
7. Spring (2)
8. Brake Spider
9. Anchor Pin

Figure 2-158. Brake Shoes and Linings
(Axle Assembly No. 2)

f. Camshaft and Slack Adjuster

(1) Remove cotter pin (1, Figure 2-159) and pin (2) from slack adjuster (3). Discard cotter pin (1).

NOTE

The number of shims (5) may vary when adjusting end play.

(2) Remove C-clip (4) and shim(s) (5) from camshaft (6). Discard C-clip (4).

(3) Remove slack adjuster (3) and washer (7) from camshaft (6).

(4) Remove seals (8 and 9) from camshaft (6). Discard seals (8 and 9).

(5) Remove bushings (10 and 11) from bracket (12).

g. Brake Spider and Bracket

(1) Remove four capscrews (1, Figure 2-160) and washers (2) from brake spider (6) and bracket (3).

(2) Remove bracket (3) from brake spider (6).

(3) Remove six locknuts (4) and washers (5) from brake shoe side of brake spider (6). Discard locknuts (4).

NOTE

Mark brake spider before removal to ensure proper installation.

(4) Remove two locknuts (4) and washers (5) from axle housing (8). Discard locknuts (4).

(5) Remove eight capscrews (7) from axle housing (8) and brake spider (6).

(6) Remove brake spider (6) from axle housing (8).

2-133. SPRING AND SEAT ASSEMBLY

WARNING

The spring and seat assembly is very heavy. To prevent personal injury, use an overhead lifting device to remove spring and seat assembly.

To prevent personal injury, direct personnel to stay clear of spring and seat assembly during removal procedures.

NOTE

Help from assistant(s) may be needed to guide spring and seat assembly when removing it from MK48.

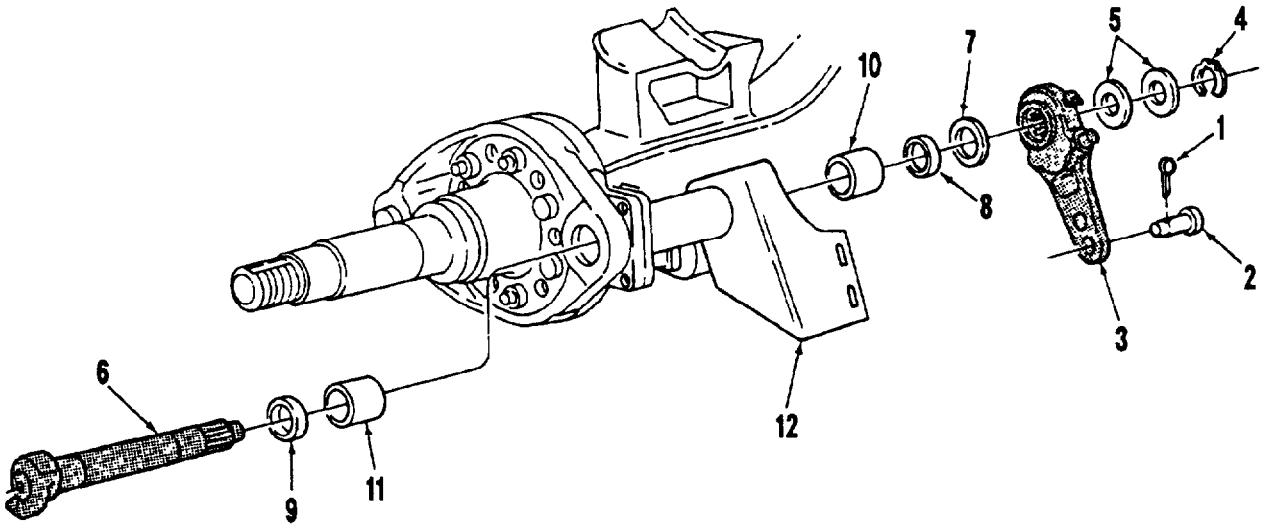

1. Cotter Pin
2. Pin
3. Slack Adjuster
4. C-Clip
5. Shim(s)
6. Camshaft
7. Washer
8. Seal
9. Seal
10. Bushing
11. Bushing
12. Bracket

Figure 2-159. Camshaft and Slack Adjuster
(Axle Assembly No. 2)

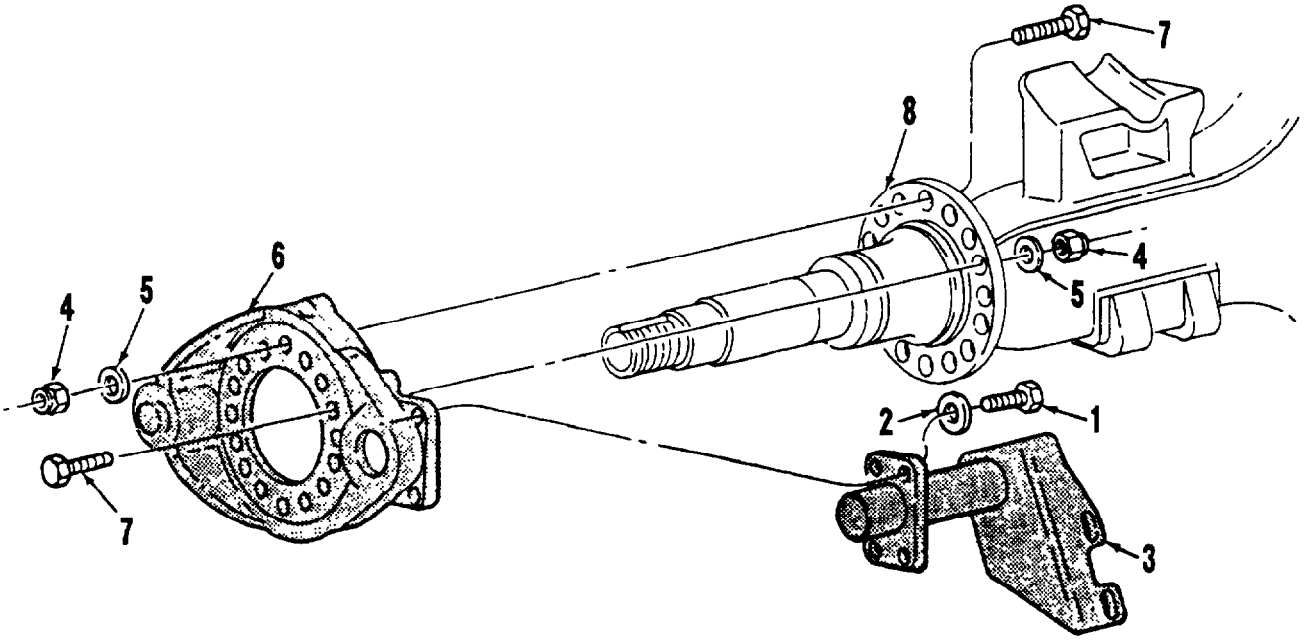

1. Capscrew (4)
2. Washer (4)
3. Bracket
4. Locknut (8)
5. Washer (8)
6. Brake Spider
7. Capscrew (8)
8. Axle Housing

Figure 2-160. Brake Spider and Bracket
(Axle Assembly No. 2)

a. Loosen two capscrews (1, Figure 2-161). Do not remove capscrews (1) yet.

b. Loosen four nuts (2). Do not remove nuts (2) yet.

c. Remove six capscrews (3) and lockwashers (4) from cover (5). Discard lockwashers (4).

d. Remove cover (5) from spring and seat assembly (8).

e. Remove two roll pins (6) from nut-locking (7). Discard roll pins (6).

f. Remove nut-locking (7) from skein (10).

g. Pull spring and seat assembly (8) out to loosen bearing cone (9).

h. Remove bearing cone (9) from skein (10).

i. Remove spring and seat assembly (8) from MK48 using an overhead lifting device.

2-134. PRESSURE PROTECTION VALVE

WARNING

Air lines under pressure will move violently when removed. To prevent personal injury, drain all air pressure from system before removing pressurized components.

NOTE

Air lines are compression type lines. These air lines have sleeves inserted in the ends to help support line. They also use eyelets to seal lines. When removing air lines the eyelet may stay with the line or may stay with the fitting.

Tag all air lines and note location and position of fittings before removal to ensure proper installation.

a. Remove air line (1, Figure 2-162) from 90° elbow (2).

b. Remove pressure protection valve (4) from nipple (6).

c. Remove 90° elbow (2) from pressure protection valve (4).

d. Remove nipple (6) from adapter (3).

e. Remove adapter (3) from quick buildup air reservoir (5).

2-135. QUICK BUILDUP AIR RESERVOIR

WARNING

Air lines under pressure will move violently when removed. To prevent personal injury, drain all air pressure from system before removing pressurized components.

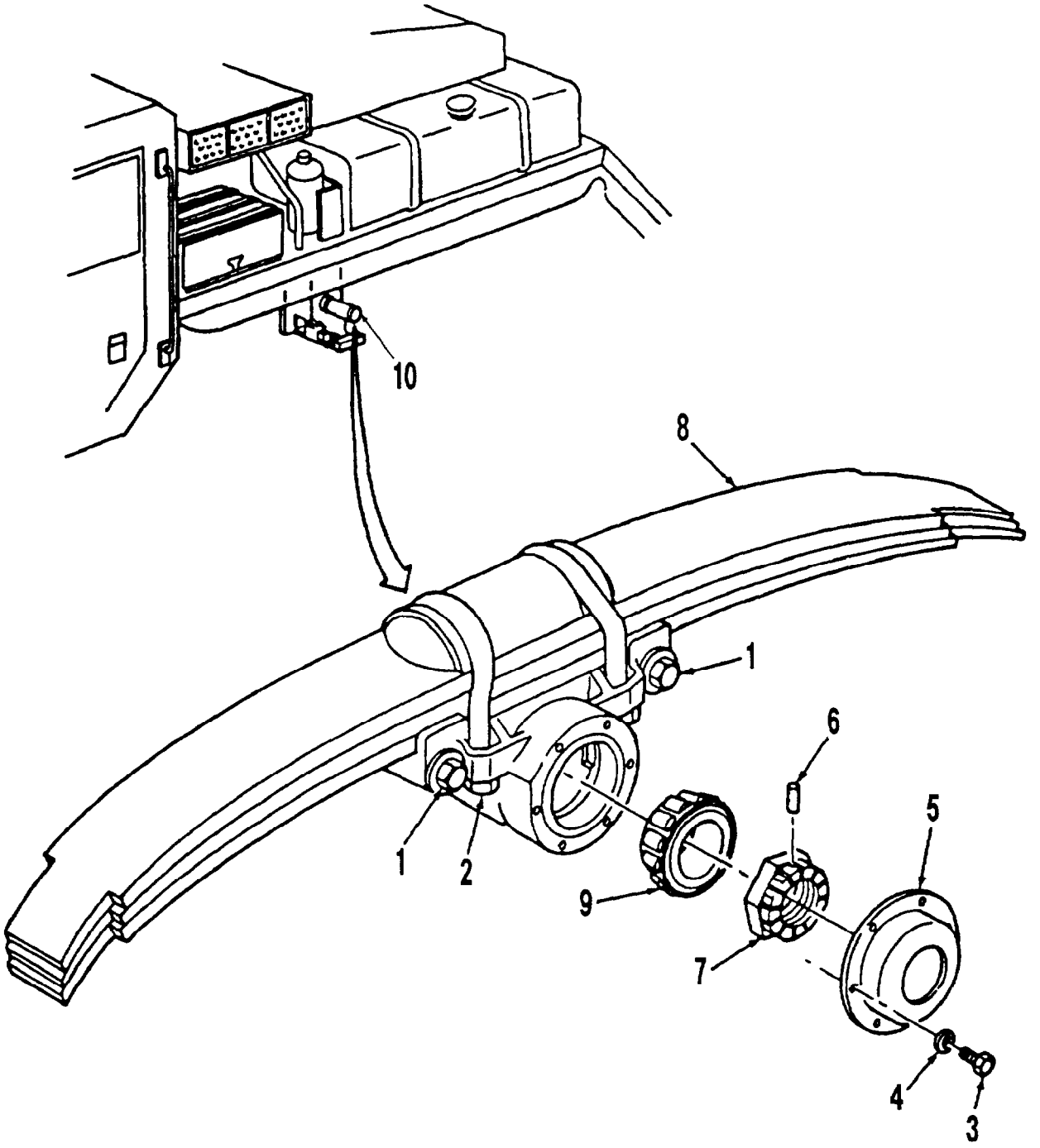

1. Capscrew (2)
2. Nut (4)
3. Capscrew (6)
4. Lockwasher (6)
5. Cover
6. Roll Pin (2)
7. Nut-Locking
8. Spring and Seat Assembly
9. Bearing Cone
10. Skein

Figure 2-161. Spring and Seat Assembly

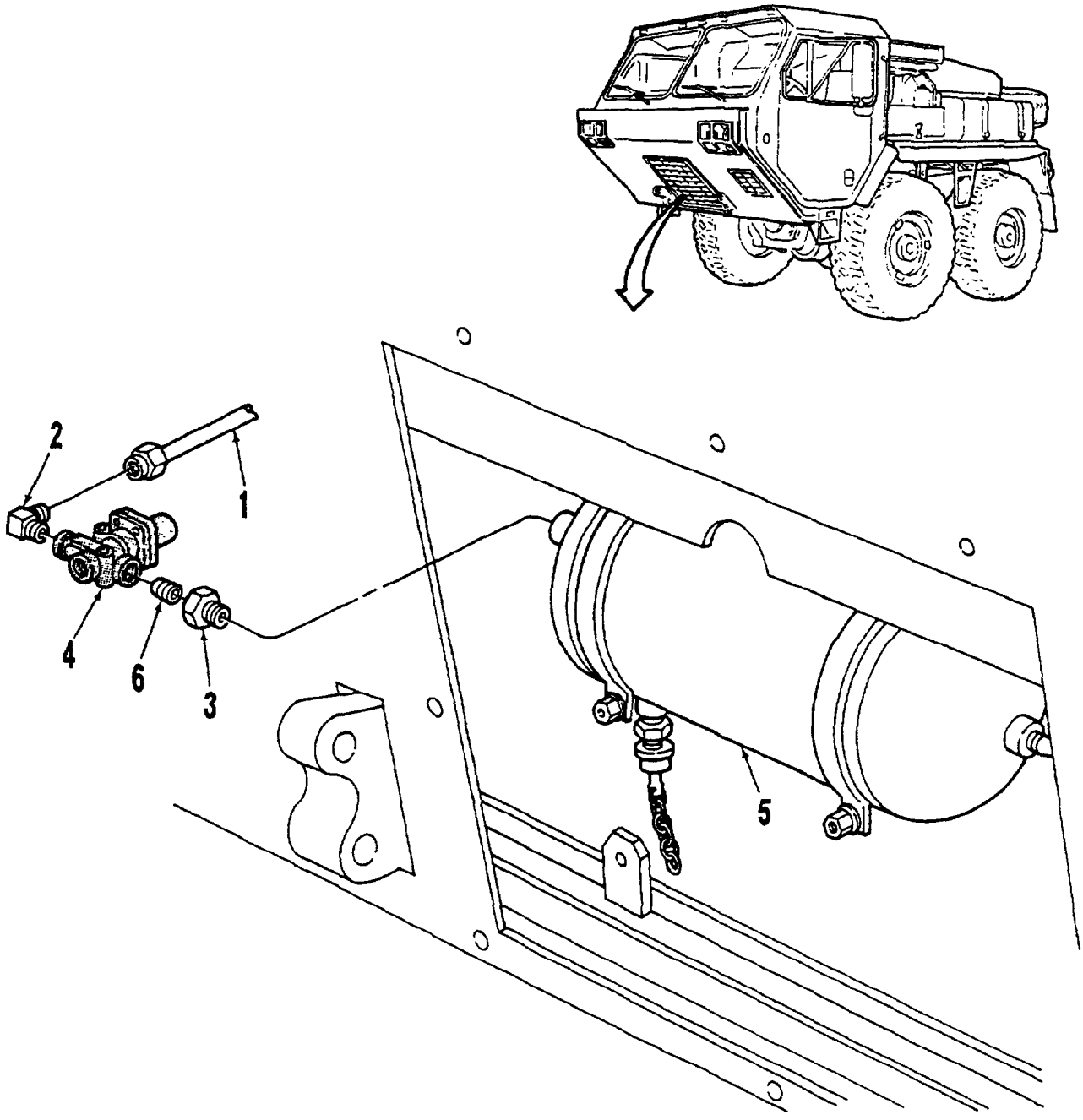

1. Air Line
2. 90° Elbow
3. Adapter
4. Pressure Protection Valve
5. Quick Buildup Air Reservoir
6. Nipple

Figure 2-162. Pressure Protection Valve

NOTE

Air lines are compression type lines. These air lines have sleeves inserted in the ends to help support line. They also use eyelets to seal lines. When removing air lines, the eyelet may stay with the line or may stay with the fitting.

Tag all air lines and note location and position of fittings before removal to insure proper installation.

a. Remove three air lines (1, Figure 2-163) from 90° elbows (11 and 12) and straight fitting (15).

b. Remove pull chain (2) from drain valve (18).

c. Remove two nuts (3) and lockwashers (4) from capscrews (6). Discard lockwashers (4).

d. Remove two capscrews (6) from mounting brackets (5).

e. Spread mounting brackets (5) and remove quick buildup air reservoir (7).

f. Remove four locknuts (8), mounting brackets (5), and capscrews (10) from frame mounting brackets (20). Discard locknuts (8).

g. Remove 90° elbows (11 and 12) from left and top of quick buildup air reservoir (7) respectively.

NOTE

Air line fittings for the LVSA1 quick build-up air reservoir has changed from a nipple and tee to street tee. When repairing a non-A1 vehicle, use the new style tee to replace the old style tee. Refer to TM 9-2320-297-24P for correct parts identification.

h. Remove safety valve (13), straight fitting (15), tee fitting (14), and reducer (17) from rear of quick buildup air reservoir (7).

i Remove drain valve (18) and reducer (19) from bottom of quick buildup air reservoir (7).

2-136. PRIORITY FLUID CONTROL VALVE

WARNING

Hydraulics may be under pressure and can spurt out when lines are disconnected. To prevent personal injury, crack all lines slowly, keep face clear of lines, and wear safety glasses when working with hydraulic system.

NOTE

Tag all hydraulic lines before removal to ensure proper installation.

Place a container under priority fluid control valve to catch any hydraulic fluid that may spill when hydraulic lines are removed.

a. Remove three hydraulic lines (1, 2, and 3, Figure 2-164) from straight fittings (9 and 11) and 90° elbow (13) respectively.

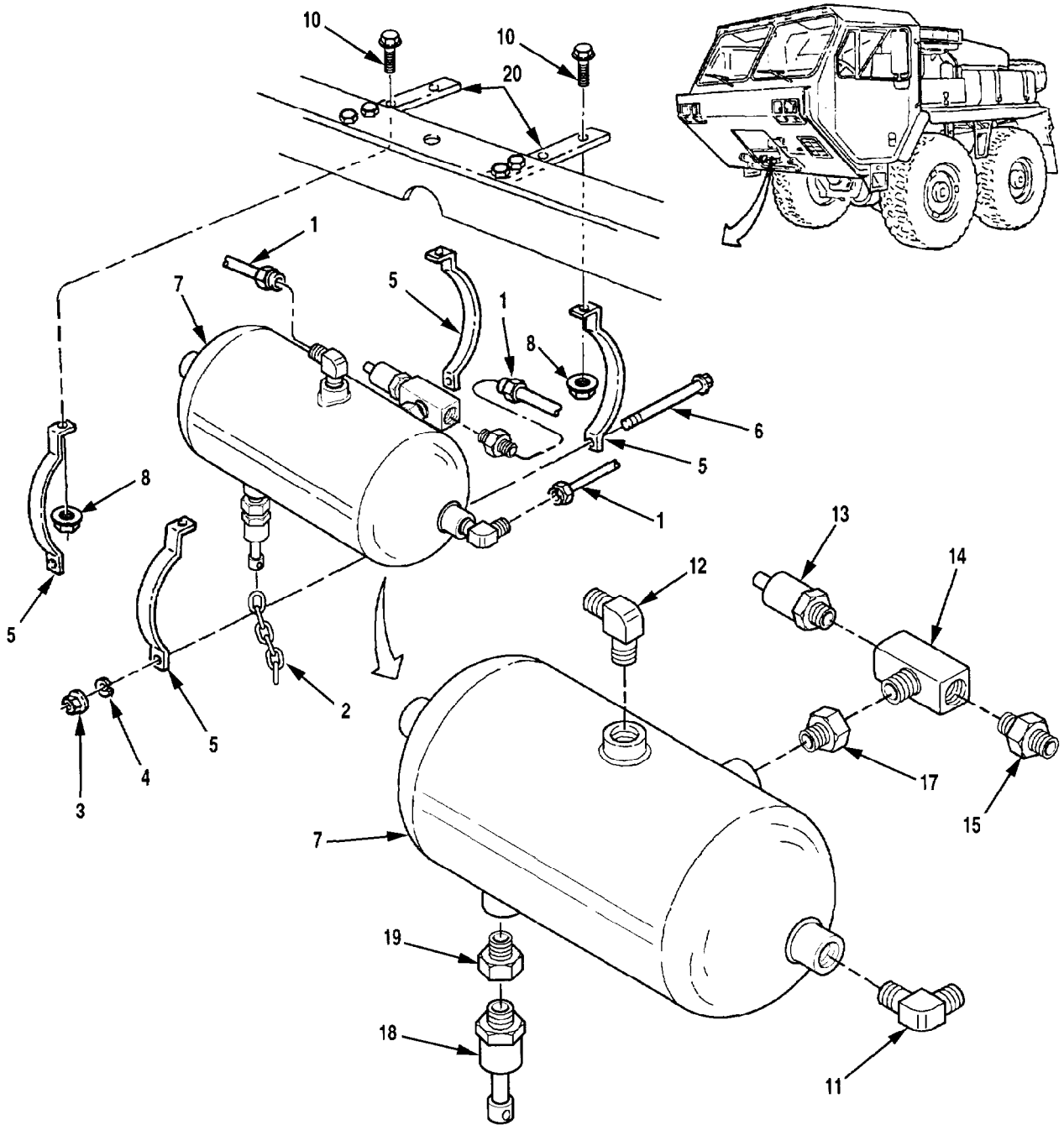

1. Air Line (3)
2. Pull Chain
3. Nut (2)
4. Lockwasher (2)
5. Mounting Bracket (4)
6. Capscrew (2)
7. Quick Buildup Air Reservoir
8. Locknut (4)
9. Deleted
10. Capscrew (4)
11. 90° Elbow
12. 90° Elbow
13. Safety Valve
14. Tee Fitting
15. Straight Fitting
16. Deleted
17. Reducer
18. Drain Valve
19. Reducer
20. Frame Mounting Bracket (2)

Figure 2-163. Quick Buildup Air Reservoir

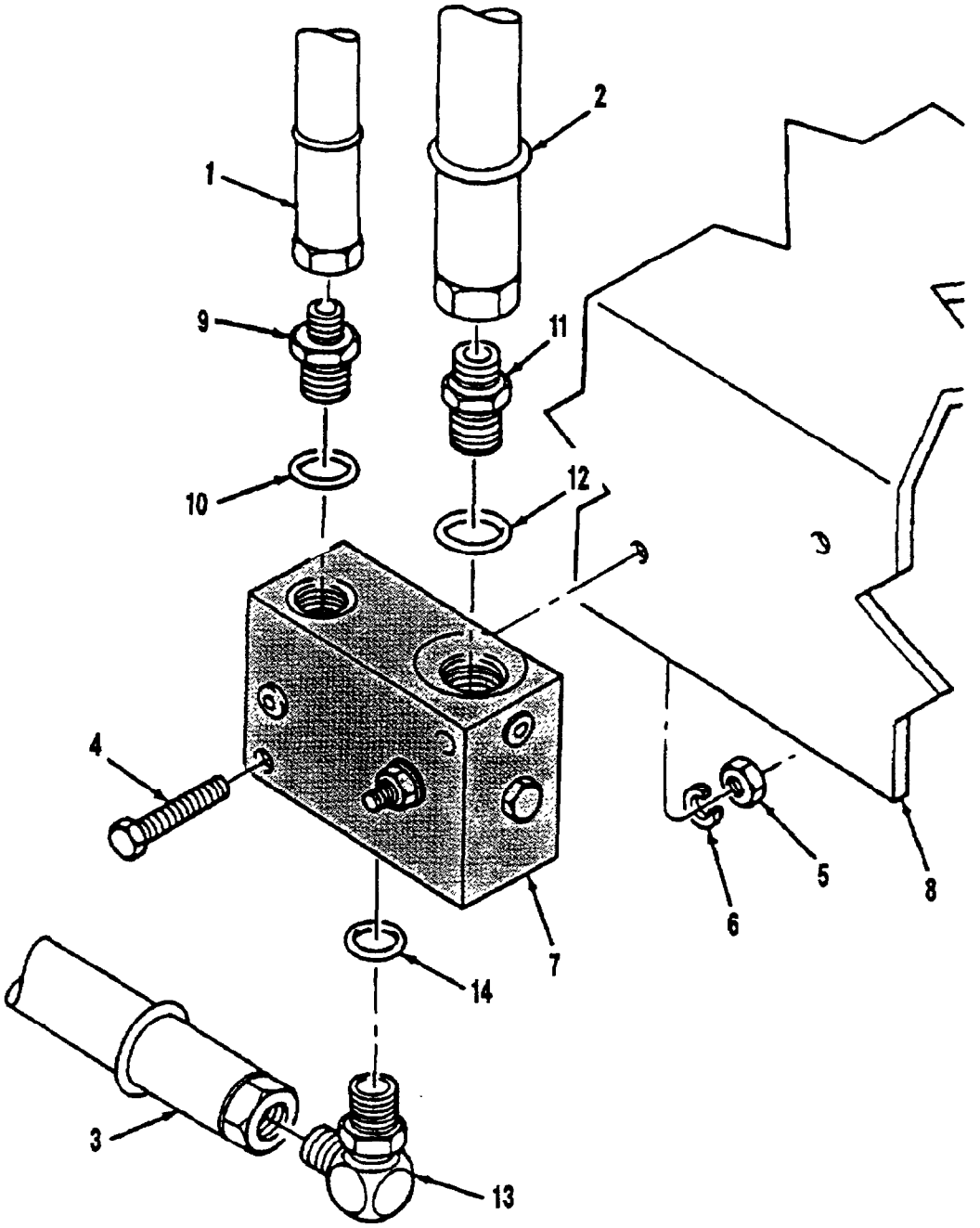

1. Hydraulic Line
2. Hydraulic Line
3. Hydraulic Line
4. Capscrew (2)
5. Nut (2)
6. Lockwasher (2)
7. Priority Fluid Control Valve
8. Crossmember
9. Straight Fitting
10. O-Ring
11. Straight Fitting
12. O-Ring
13. 90° Elbow
14. O-Ring

Figure 2-164. Priority Fluid Control Valve

b. Remove two nuts (5), lockwashers (6), capscrews (4), and priority fluid control valve (7) from crossmember (8). Discard lockwashers (6).

c. Remove straight fittings (9 and 11) and O-rings (10 and 12), respectively, from priority fluid control valve (7). Discard O-rings (10 and 12).

d. Remove 90° elbow (13) and O-ring (14) from priority fluid control valve (7). Discard O-ring (14).

2-137. DEMAND VALVE

WARNING

Hydraulics may be under pressure and can spurt out when lines are disconnected. To prevent personal injury, crack all lines slowly, keep face clear of lines, and wear safety glasses when working with hydraulic system.

The demand valve is very heavy. To prevent personal injury, have assistant(s) help remove demand valve from MK48.

NOTE

Tag all hydraulic lines before removal to ensure proper installation.

Place a container under demand valve to catch any hydraulic fluid that may spill when hydraulic lines are removed.

a. Remove four capscrews (5, Figure 2-165), lockwashers (6), two split flange brackets (7), hydraulic line (1), and O-ring (14) from demand valve (11). Discard lockwashers (6) and O-ring (14).

b. Repeat step b for each remaining hydraulic line (2 through 4). Discard lockwashers (6) and O-rings (13, 15, and 16).

c. Remove three nuts (9), lockwashers (10), capscrews (8), and demand valve (11) from mounting bracket (12). Discard lockwashers (10).

2-138. HYDRAULIC STEERING MANIFOLD

WARNING

Hydraulics may be under pressure and can spurt out when lines are disconnected. To prevent personal injury, crack all lines slowly, keep face clear of lines, and wear safety glasses when working with hydraulic system.

NOTE

Tag all hydraulic lines before removal to ensure proper installation.

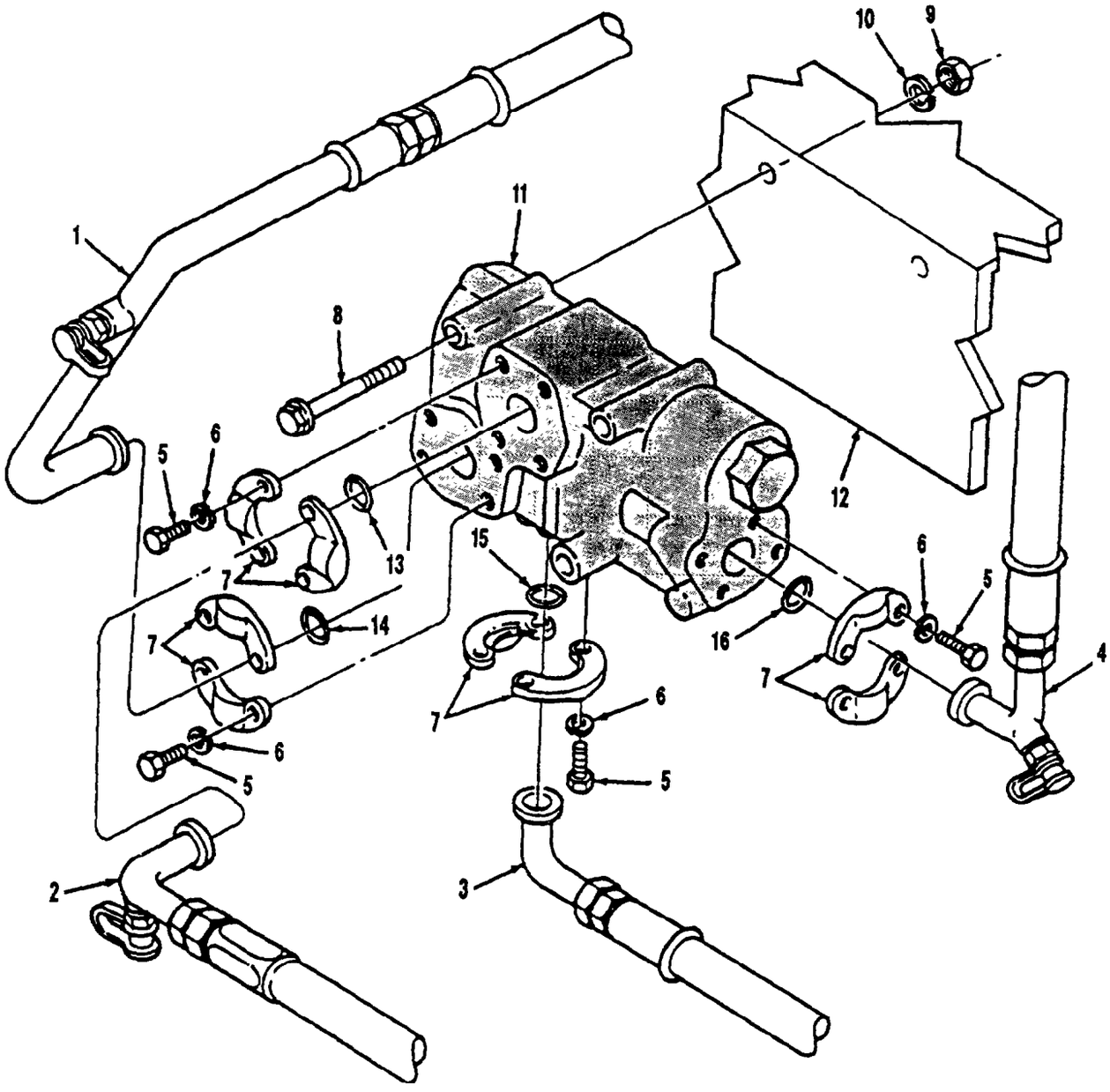

1. Hydraulic Line
2. Hydraulic Line
3. Hydraulic Line
4. Hydraulic Line
5. Capscrew (16)
6. Lockwasher (16)
7. Split Flange Bracket (8)
8. Capscrew (3)
9. Nut (3)
10. Lockwasher (3)
11. Demand Valve
12. Mounting Bracket
13. O-Ring
14. O-Ring
15. O-Ring
16. O-Ring

Figure 2-165. Demand Valve

NOTE

Place a container under hydraulic steering manifold to catch any hydraulic fluid that may spill when hydraulic lines are removed.

a. Remove three hydraulic lines (1, 2, and 3, Figure 2-166) from 90° elbow (4) and straight fittings (5 and 6) respectively.

b. Remove two nuts (10), lockwashers (11), and capscrews (12) from crossmember (14) and hydraulic steering manifold (13). Discard lockwashers (11).

c. Remove hydraulic steering manifold (13) from crossmember (14).

d. Remove 90° elbow (4), straight fittings (5 and 6), and O-rings (7, 8, and 9) from hydraulic steering manifold (13). Discard O-rings (7, 8, and 9).

2-139. STEERING RELIEF VALVE

WARNING

Hydraulics may be under pressure and can spurt out when lines are disconnected. To prevent personal injury, crack all lines slowly, keep face clear of lines, and wear safety glasses when working with hydraulic system.

NOTE

Tag all hydraulic lines before removal to ensure proper installation.

Place a container under steering relief valve to catch any hydraulic fluid that may spill when hydraulic lines are removed.

a. Remove four hydraulic lines (1, 2, 3, and 4, Figure 2-167) from tee fitting (16), 45° elbow (14), 90° elbow (12), and tee fitting (16) respectively.

b. Remove two nuts (6), lockwashers (7), and capscrews (5) from crossmember (11), plate (10), and steering relief valve (8). Discard lockwashers (7).

c. Remove steering relief valve (8), two washers (9), and plate (10) from crossmember (11).

d. Remove 90° elbow (12), 45° elbow (14), tee fitting (16), and O-rings (13, 15, and 17) from steering relief valve (8). Discard O-rings (13, 15, and 17).

e. Remove protective cap (19), pressure check fitting (18), and O-ring (20) from steering relief valve (8). Discard O-ring (20).

2-140. FRONT AIR MANIFOLD

WARNING

Air lines under pressure will move violently when removed. To prevent personal injury, drain all air pressure from system before removing pressurized components.

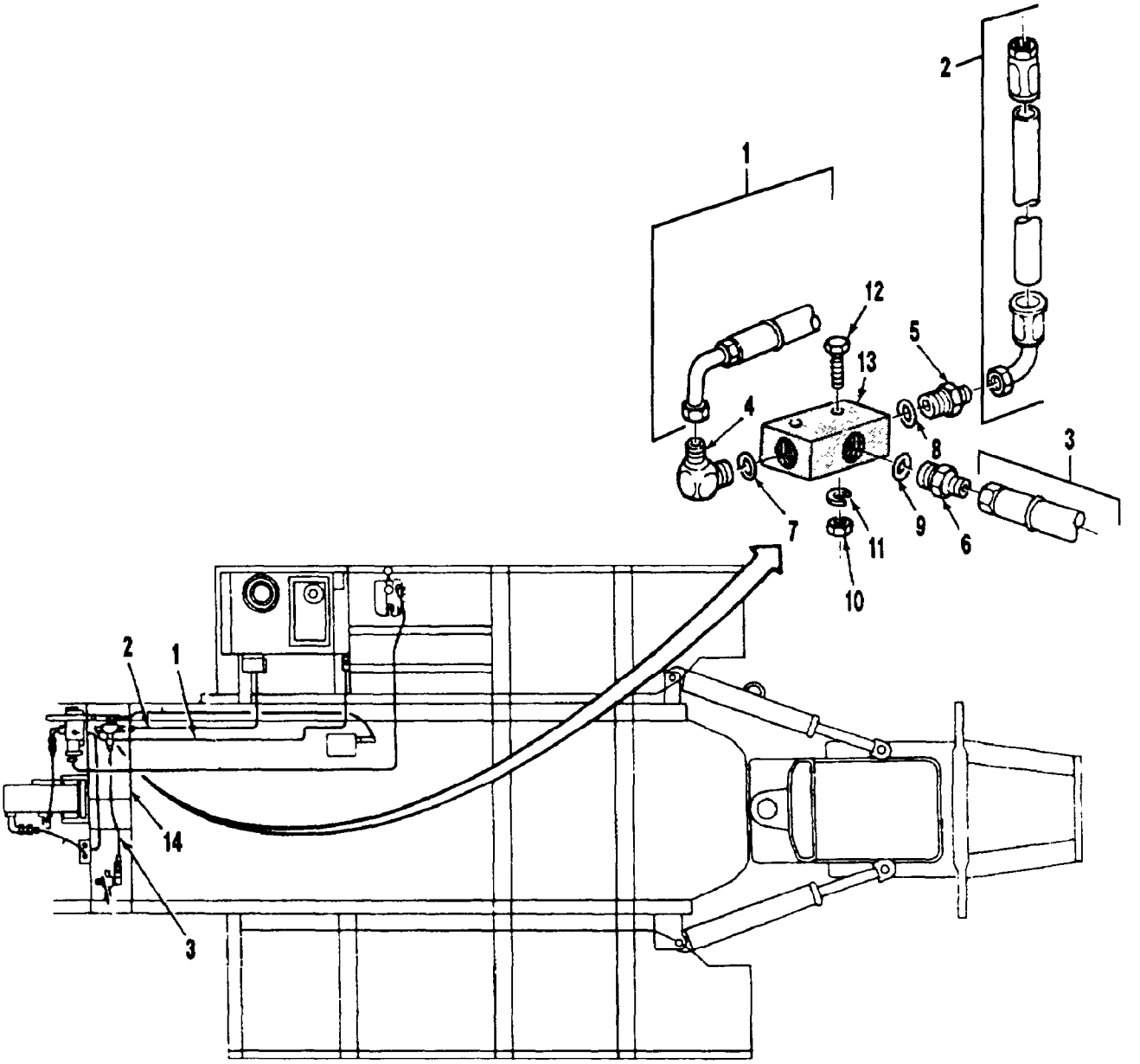

1. Hydraulic Line
2. Hydraulic Line
3. Hydraulic Line
4. 90° Elbow
5. Straight Fitting
6. Straight Fitting
7. O-Ring
8. O-Ring
9. O-Ring
10. Nut (2)
11. Lockwasher (2)
12. Capscrew (2)
13. Hydraulic Steering Manifold
14. Crossmember

Figure 2-166. Hydraulic Steering Manifold

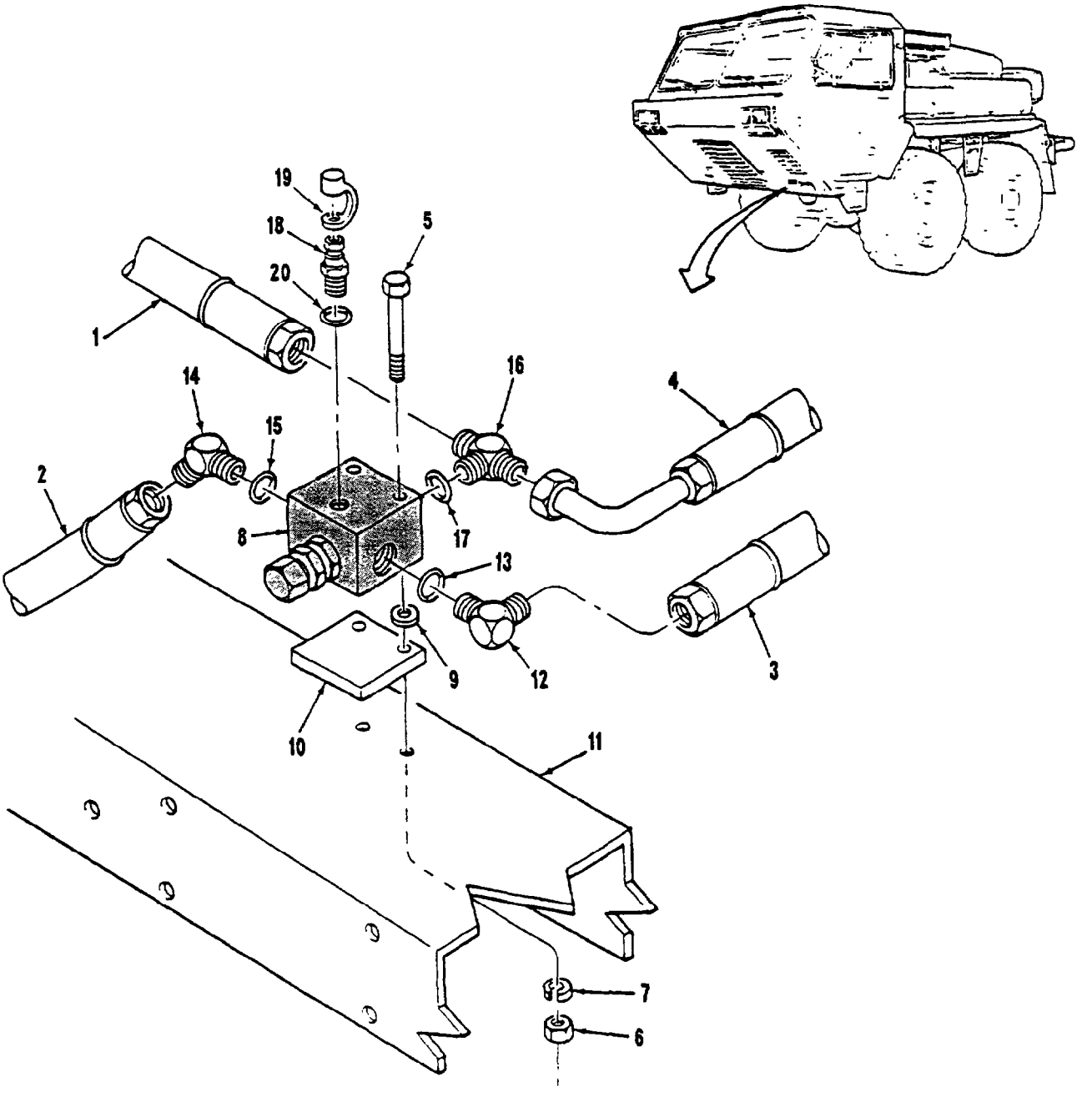

1. Hydraulic Line
2. Hydraulic Line
3. Hydraulic Line
4. Hydraulic Line
5. Capscrew (2)
6. Nut (2)
7. Lockwasher (2)
8. Steering Relief Valve
9. Washer (2)
10. Plate
11. Crossmember
12. 90° Elbow
13. O-Ring
14. 45° Elbow
15. O-Ring
16. Tee Fitting
17. O-Ring
18. Pressure Check Fitting
19. Protective Cap
20. O-Ring

Figure 2-167. Steering Relief Valve

NOTE

Note location of fittings before removal to ensure proper installation.

Tag all air lines before removal to ensure proper installation.

Mounting hardware for LVSA1 front air manifolds has changed from a capscrew, lockwasher, and hex nut to a flanged type capscrew and locknut. When repairing a non-A1 vehicle, use the new style flanged mounting hardware to replace the old style hardware. Refer to TM 9-2320-297-24P for correct mounting hardware.

a. Remove five air lines (1 through 5, Figure 2-168) from 90° elbows (19, 16, 17, and 18) and check valve (13) respectively.

b. Remove two locknuts (6), spacers (8), washers (9), and front air manifold (15) from frame (11). Discard locknuts (6).

c. Remove 90° elbow (19), check valve (20), and 90° elbow (22) from front air manifold (15). When removing check valve (20), place wrench on small nut (21).

d. Remove 90° elbows (16, 17, and 18) from front air manifold (15).

e. Remove straight fitting (12) from check valve (13).

f. Remove check valve (13) from front air manifold (15). When removing check valve (13), place wrench on small nut (14).

2-141. GLAD HANDS

WARNING

Air lines under pressure will move violently when removed. To prevent personal injury, drain all air pressure from system before removing pressurized components.

NOTE

Tag all air lines before removal to ensure proper installation.

a. Remove dummy coupler (1, Figure 2-169) from glad hand (2).

b. Disconnect air line (3) from 90° elbow (4).

c. Remove 90° elbow (4) from anchor stud (5).

d. Remove nut (6) and star washer (7) from anchor stud (5). Discard star washer (7).

e. Remove glad hand (2) and anchor stud (5) from bracket (8).

f. Remove anchor stud (5) from glad hand (2).

NOTE

Perform step g on LVSA1 series vehicles only.

g. Remove two capscrews (9), nuts (10), and glad hand mounting bracket (11) from front engine mount (12).

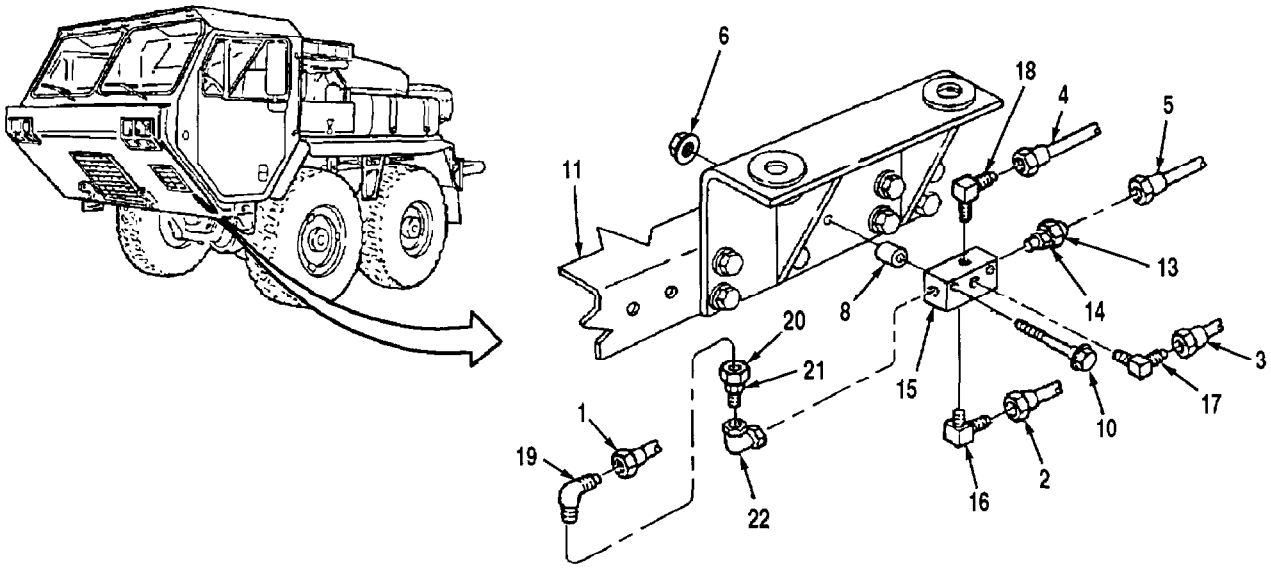

1. Air Line
2. Air Line
3. Air Line
4. Air Line
5. Air Line
6. Locknut (2)
7. Deleted
8. Spacer (2)
9. Deleted
10. Capscrew (2)
11. Frame
12. Deleted
13. Check Valve
14. Small Nut
15. Front Air Manifold
16. 90° Elbow
17. 90° Elbow
18. 90° Elbow
19. 90° Elbow
20. Check Valve
21. Small Nut
22. 90° Elbow
23. Deleted

Figure 2-168. Front Air Manifold

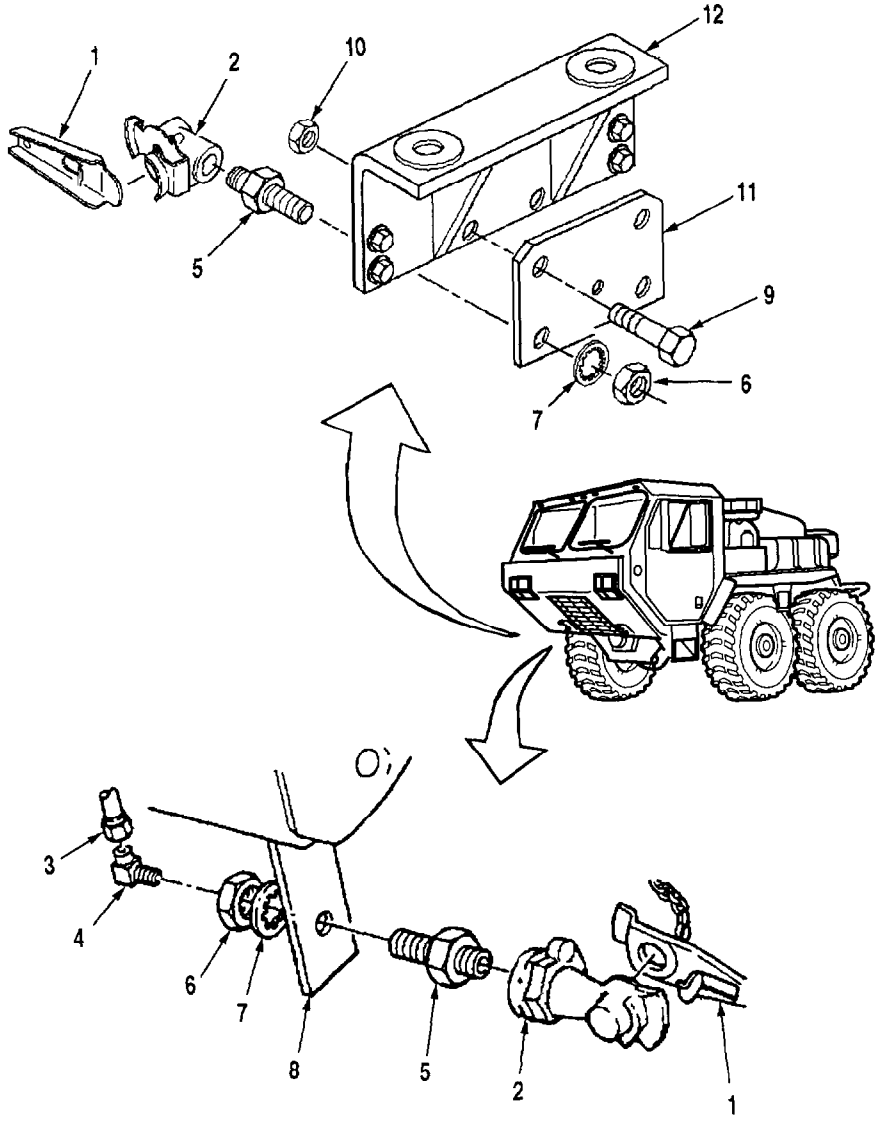

1. Dummy Coupler
2. Glad Hand
3. Air Line
4. 90°
5. Anchor Stud
6. Nut
7. Star Washer
8. Bracket
9. Capscrew (2)*
10. Nut (2)*
11. Glad Hand Mounting Bracket*
12. Front Engine Mount

* LVSA1 Series Vehicles Only

Figure 2-169. Glad Hands

NOTE

Tag all air lines before removal to ensure proper installation.

a. Remove two air lines (1 and 2, Figure 2-170) from 90° elbows (6 and 3) respectively.

b. Remove 90° elbow (3) from ball valve (4).

c. Remove ball valve (4) from anchor stud (5).

d. Remove 90° elbow (6) from anchor stud (5).

e. Remove nut (7), star washer (8), and anchor stud (5) from mounting bracket (10). Discard star washer (8).

2-143. RELAY VALVES

WARNING

Air lines under pressure will move violently when removed. To prevent personal injury, drain all air pressure from system before removing pressurized components.

NOTE

Tag all air lines before removal to ensure proper installation.

This procedure works for both relay valves.

a. Remove air line (1, Figure 2-171) from 90° elbow (9).

b. Remove air line (3) from 90° elbow (11).

c. Remove two air lines (4) from tee fitting (10).

NOTE

Mounting hardware for LVSA1 relay valves has changed from a capscrew, lockwasher, washer and hex nut to a flanged type capscrew and locknut. When repairing a non–A1 vehicle, use the new style flanged mounting hardware to replace the old style hardware. Refer to TM 9-2320-297-24P for correct mounting hardware.

d. Remove two locknuts (5), capscrews (8) and bracket (15) with relay valve (2) from mounting bracket (16). Discard locknuts (5).

NOTE

Note type and location of fittings to ensure proper installation.

Capscrews (13), lockwashers (14), and bracket (15) will be removed during disassembly.

e. Remove 90° elbow (9) from side of relay valve (2).

f. Remove tee fitting (10) from top of relay valve (2).

NOTE

Perform steps f.1 through f.4 on LVSA1 series vehicles only.

f.1. Remove double check valve (10.1), tee (10.2), and elbow (10.3) from top of rear relay valve (10.4).

f.2. Remove tee (10.2) and elbow (10.3) from double check valve (10.1).

f.3. Remove street tee (10.5), tee (10.6), elbow (10.7) and two connectors (10.8) from top of front relay valve (10.9).

f.4. Remove tee (10.6), elbow (10.7), and two connectors (10.8) from street tee (10.5).

g. Remove elbow (11) from bottom of relay valve (2).

h. Remove plug (12) from bottom of relay valve (2).

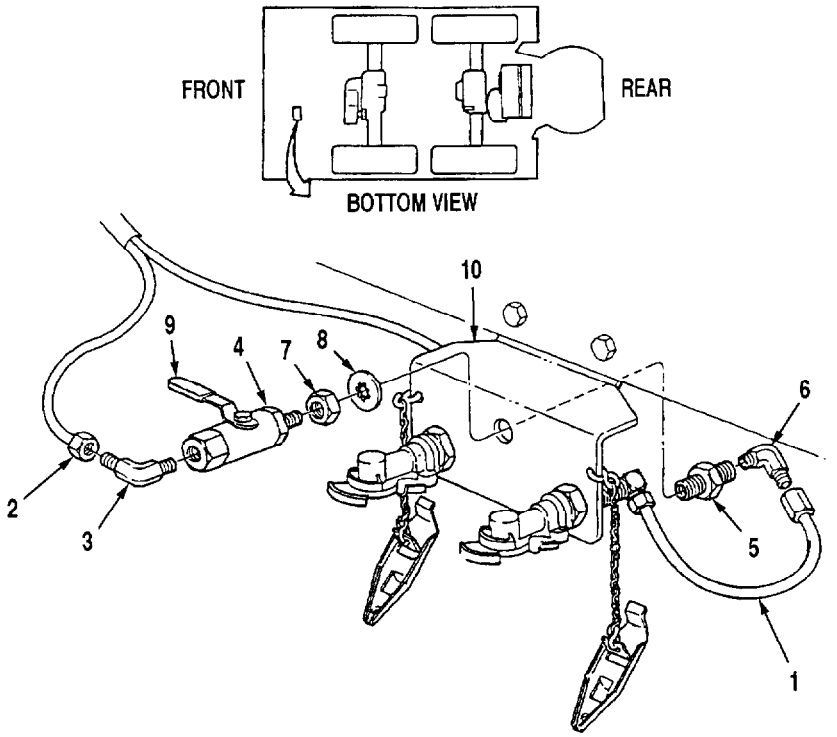

1. Air Line
2. Air Line
3. 90° Elbow
4. Ball Valve
5. Anchor Stud
6. 90° Elbow
7. Nut
8. Star Washer
9. Handle
10. Mounting Bracket

Figure 2-170. Ball Valve

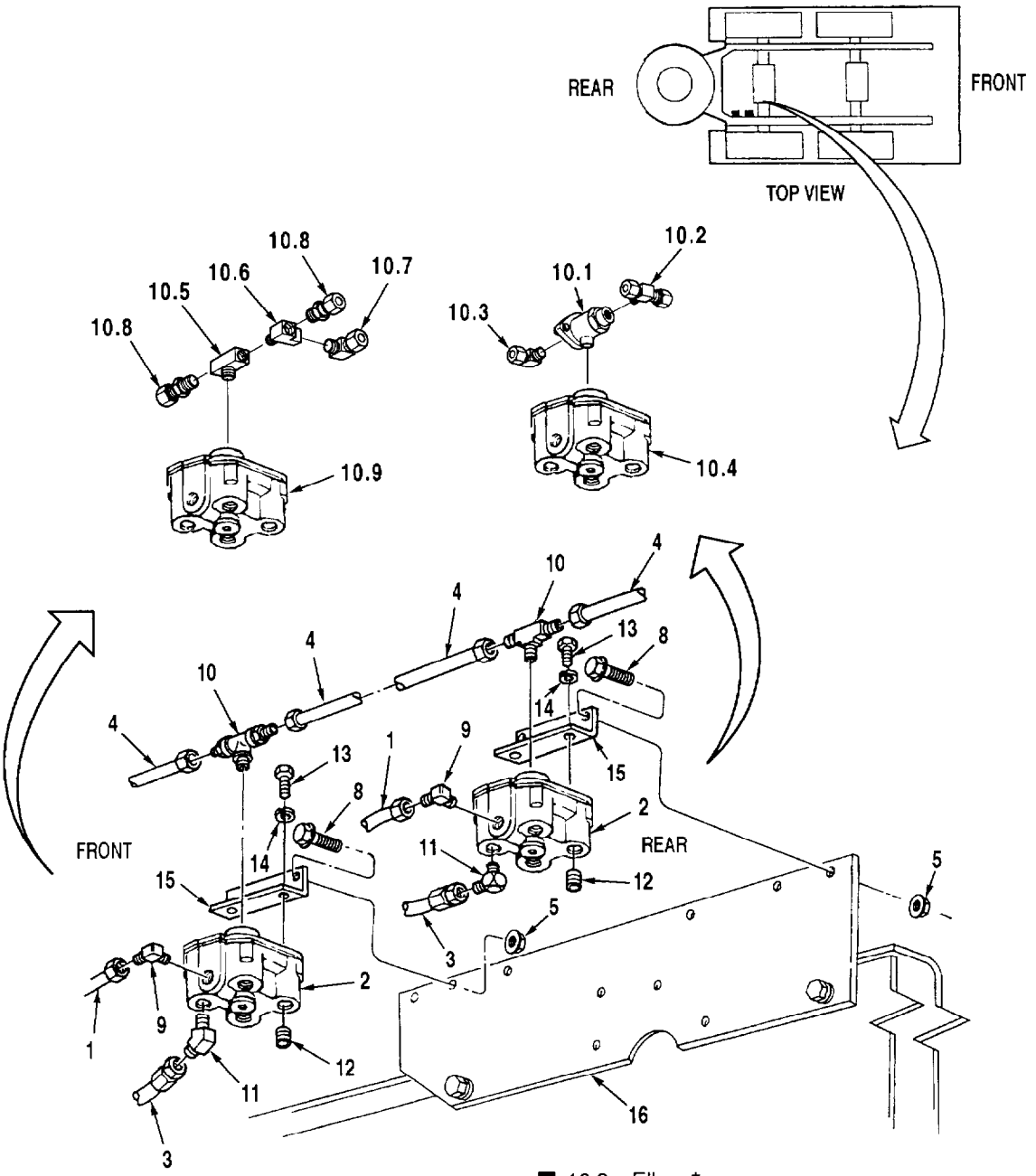

1. Air Line
2. Relay Valve
3. Air Line (2)
4. Air Line (2)
5. Locknut (4)
6. Deleted
7. Deleted
8. Capscrew (2)
9. Elbow
10. Tee Fitting (2)
10.1. Double Check Valve*
10.2. Tee*
10.3. Elbow*
10.4. Rear Relay Valve
10.5. Street Tee*
10.6. Tee*
10.7. Elbow*
10.8. Connector (2)*
10.9. Front Relay Valve
11. Elbow (2)
12. Plug (2)
13. Capscrew (2)
14. Lockwasher (2)
15. Bracket (2)
16. Mounting Bracket

* LVSA1 Series Vehicles Only

Figure 2-171. Relay Valves

2-144. CHECK VALVES

WARNING

Air lines under pressure will move violently when removed. To prevent personal injury, drain all air pressure from system before removing pressurized components.

NOTE

Tag all air lines and fittings before removal to ensure proper installation.

a. Remove three air lines (1, 2, and 3, Figure 2-172) from 90° elbows (4 and 5) and 45° elbow (6) respectively.

b. Remove nut (7), lockwasher (8), capscrew (9), and check valve (10) from mounting bracket (11). Discard lockwasher (8).

c. Remove four air lines (12, 13, 14, and 15) from 90° elbows (16, 17, and 18) and straight fitting (19) respectively.

d. Remove nut (7), lockwasher (8). capscrew (9), and check valves (10) from mounting bracket (11). Discard lockwasher (8).

e. Remove three 90° elbows (16, 17, and 18) and straight fitting (19) from check valves (10) mounted on front end of mounting bracket (11).

f. Remove two 90° elbows (4 and 5) and 45° elbow (6) from check valve (10) mounted on rear end of mounting bracket (11).

g. Remove nipple (20) by unscrewing two check valves (10) until free of nipple (20).

2-145. REAR AIR MANIFOLD

WARNING

Air lines under pressure will move violently when removed. To prevent personal injury, drain all air pressure from system before removing pressurized components.

NOTE

Tag all air lines and fittings before removal to ensure proper installation.

Mounting hardware for LVSA1 air manifolds has changed from a capscrew, lockwasher, and hex nut to a flanged type capscrew and locknut. When repairing a non-A1 vehicle, use the new style flanged mounting hardware to replace the old style hardware. Refer to TM 9-2320-297-24P for correct mounting hardware.

a. Remove four air lines (1 through 4, Figure 2-173) from 90° elbows (13, 14, 15, and 12) respectively.

b. Remove two locknuts (6), capscrews (9), and rear air manifold (5) from mounting plate (10). Discard locknuts (6).

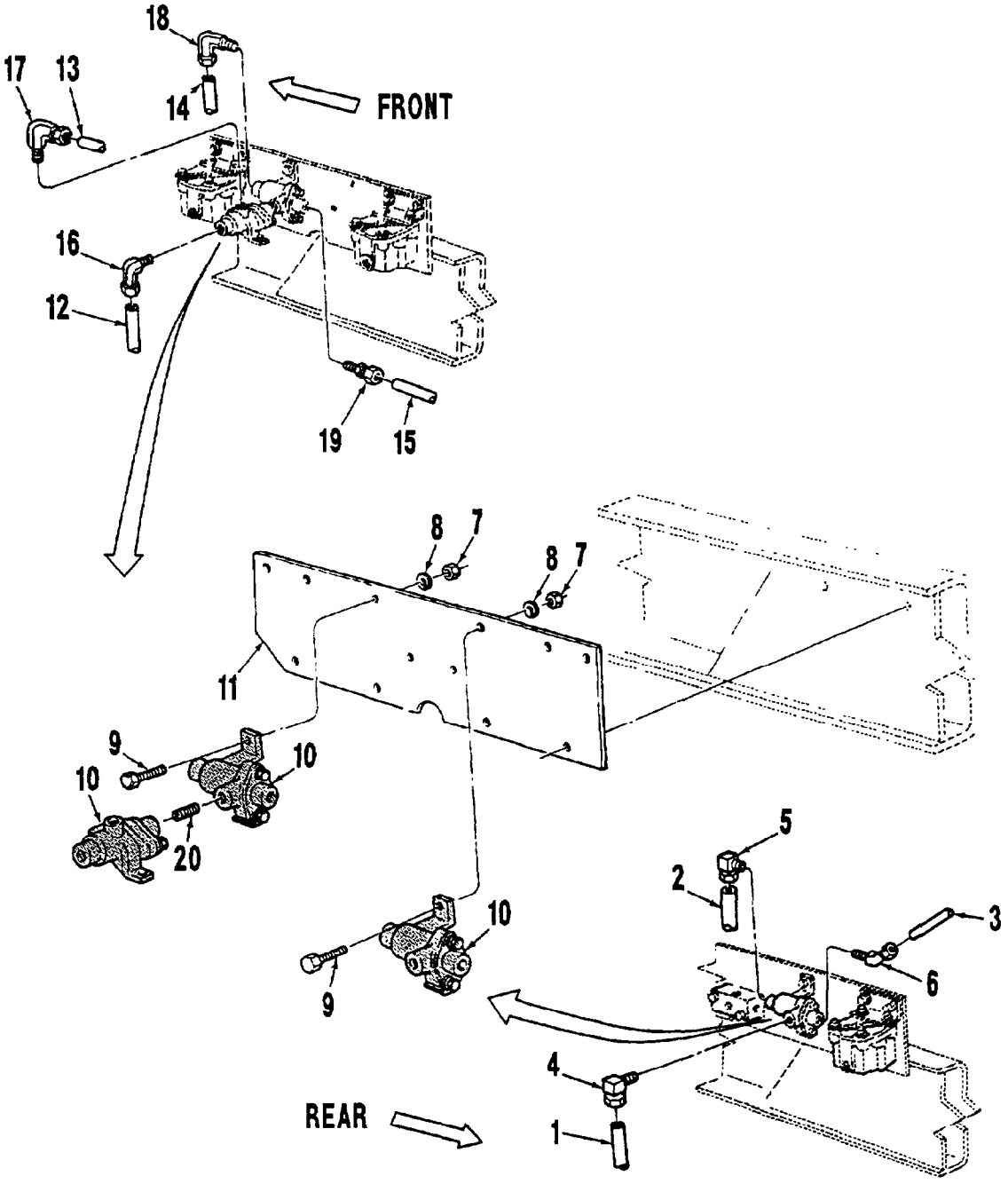

1. Air Line
2. Air Line
3. Air Line
4. 90° Elbow
5. 90° Elbow
6. 45° Elbow
7. Nut
8. Lockwasher
9. Capscrew
10. Check Valve (3)
11. Mounting Bracket
12. Air Line
13. Air Line
14. Air Line
15. Air Line
16. 90° Elbow
17. 90° Elbow
18. 90° Elbow
19. Straight Fitting
20. Nipple

Figure 2-172. Check Valves

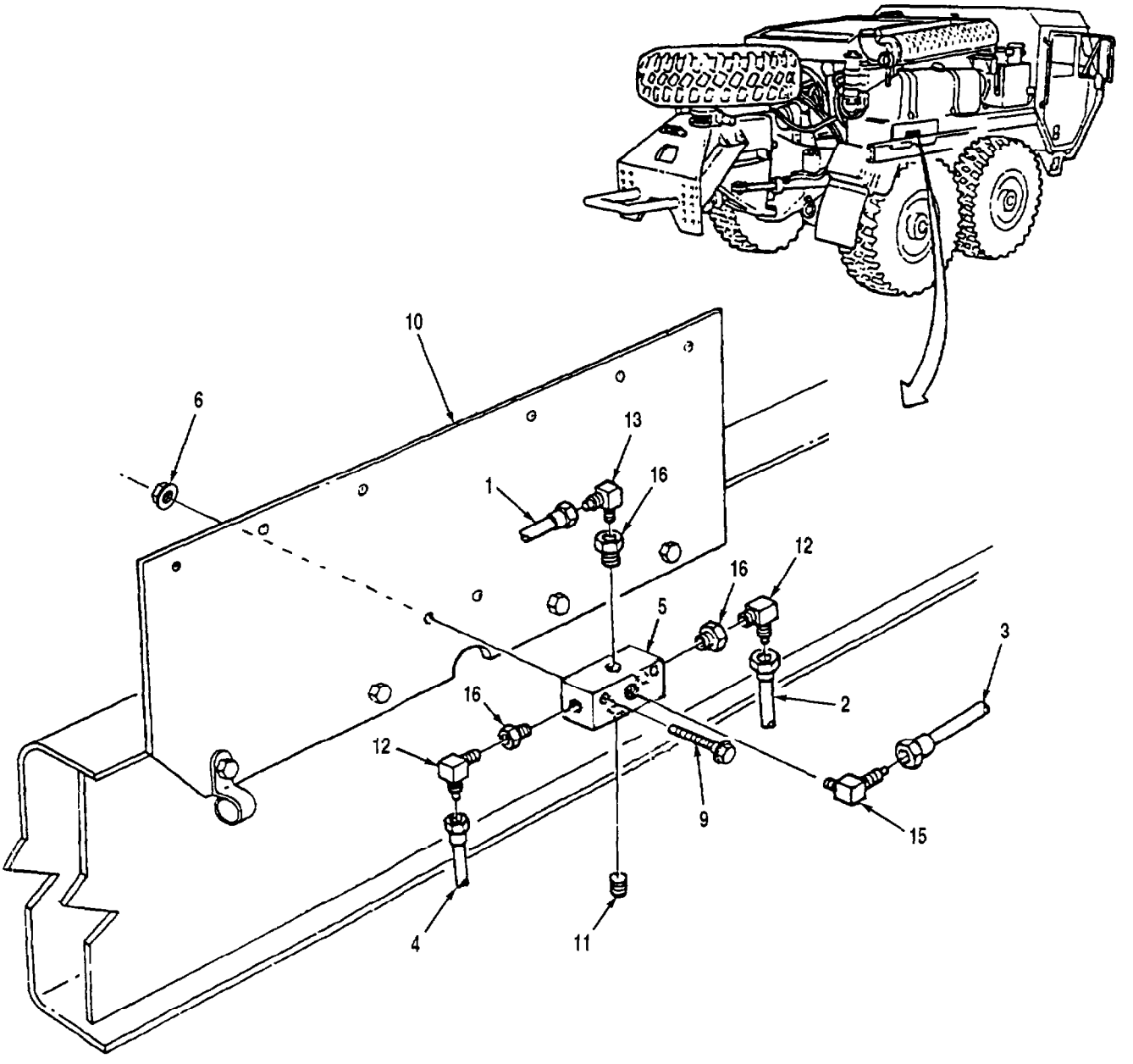

1. Air Line (No. 069D)
2. Air Line (No. 069C)
3. Air Line (No. 069B)
4. Air Line (No. 069)
5. Rear Air Manifold
6. Locknut (2)
7. Deleted
8. Deleted
9. Capscrew (2)
10. Mounting Plate
11. Plug
12. 90° Elbow
13. 90° Elbow
14. 90° Elbow
15. 90° Elbow
16. Reducer (3)

Figure 2-173. Rear Air Manifold

c. Remove three 90° elbows (12, 13, and 14) from reducers (16).

d. Remove 90° elbow (15) from rear air manifold (5).

e. Remove plug (11) and three reducers (16) from rear air manifold (5).

2-146. STEERING SHAFT - FRAME 90° GEAR BOX TO POWER STEERING GEAR

NOTE

For this procedure, the frame-90°-gear-box-end of the steering shaft was removed. Refer to Paragraph 2-70.

a. Remove clamping capscrew (1, Figure 2-174) and locknut (2) from splined yoke (3). Discard locknut (2).

b. Spread splined yoke (3) slightly as needed to allow removal from input shaft (5).

c. Remove steering shaft assembly (6) from power steering gear (4) and MK48.

2-147. PITMAN ARM

WARNING

The pitman arm is heavy. To prevent personal injury, be careful not to drop pitman arm on personnel.

CAUTION

Do not heat, pound on, or weld the pitman arm. Any of these could cause the pitman arm to fail in service.

a. Remove capscrew (1, Figure 2-175), lockwasher (2), and washer (3) from steering gear output shaft (6). Discard lockwasher (2).

b. Remove two locking setscrews (4) from pitman arm (5).

c. Remove pitman arm (5) from steering gear output shaft (6) using a puller.

2-148. POWER STEERING GEAR

WARNING

The power steering gear weighs approximately 70 pounds and is located in an awkward spot. To prevent personal injury or damage to equipment, use an overhead lifting device and lifting sling to remove power steering gear from MK48.

Hydraulics may be under pressure and can spurt out when lines are disconnected. To prevent personal injury, crack all lines slowly, keep face clear of lines, and wear safety glasses when working with hydraulic system.

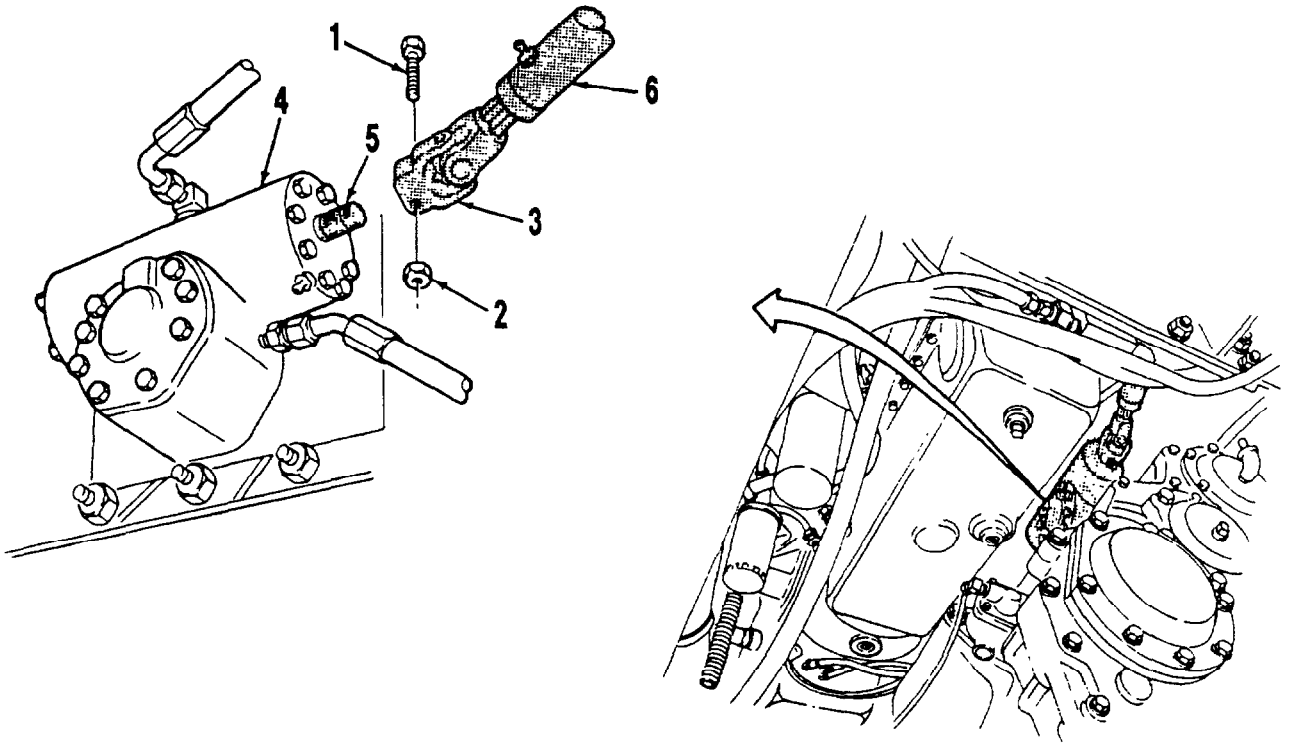

1. Clamping Capscrew
2. Locknut
3. Splined Yoke
4. Power Steering Gear
5. Input Shaft
6. Steering Shaft Assembly

Figure 2-174. Steering Shaft - Frame 90° Gear Box to Power Steering Gear

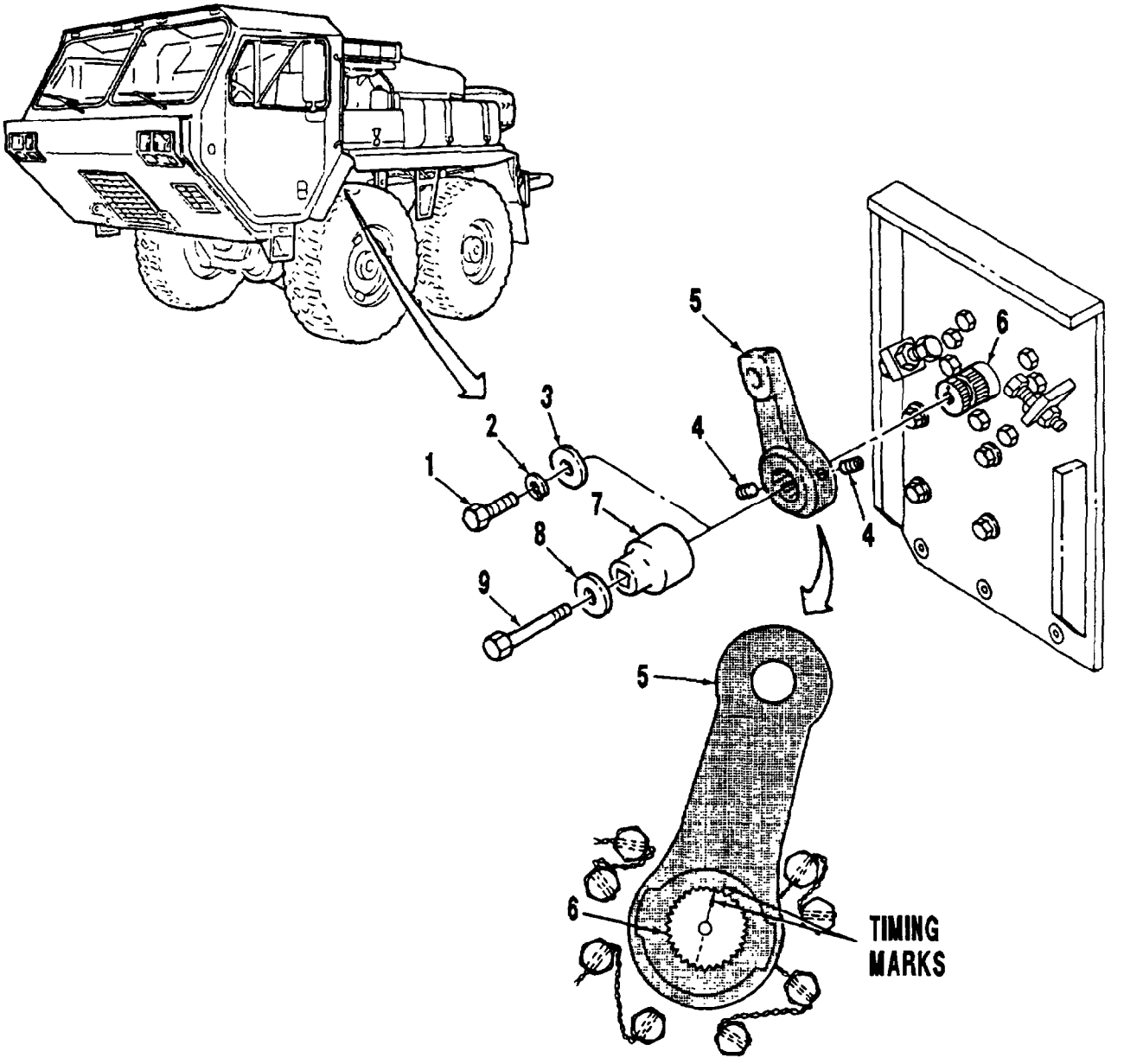

1. Capscrew
2. Lockwasher
3. Washer
4. Locking Setscrew (2)
5. Pitman Arm
6. Steering Gear Output Shaft
7. Socket (Tool)
8. Washer
9. Installing Capscrew

Figure 2-175. Pitman Arm

NOTE

Tag all hydraulic lines before removal to ensure proper installation.

Place a container under steering gear to catch any hydraulic fluid that may spill when hydraulic lines are removed.

Help from assistant(s) may be needed to guide power steering gear during removal procedures.

a. Remove two hydraulic lines (1 and 2, Figure 2-176) from power steering gear (3).

b. Cut and remove lock wire (4) from eight capscrews (5). Discard lock wire (4).

c. Remove six capscrews (5) and loosen remaining two capscrews (5) enough to permit lifting sling (6) to pass between frame (7) and power steering gear (3).

d. Loop lifting sling (6) around power steering gear (3) securely.

e. Attach overhead lifting device to lifting sling (6).

WARNING

Gloves must be worn to protect hands from sharp edges and cuts. To prevent personal injury, be very careful not to get hand(s) caught between power steering gear and any part of MK48 during removal; serious injury to hand(s) could result.

f. Have assistant take a position under vehicle to assist in lowering power steering gear (3) to the ground.

g. Remove last two capscrews (5) from power steering gear (3).

h. Carefully pull power steering gear (3) free from frame (7) and lower to ground.

i. Remove power steering gear (3) from under vehicle.

2-149. LOCKOUT STRUTS

NOTE

This procedure works for both lockout struts.

a. Remove cotter hairpin (1, Figure 2-177) from pin (2).

b. Remove pin (2) from upper lockout strut suspension lock link (3).

c. Remove lockout strut (4) from frame assembly (5).

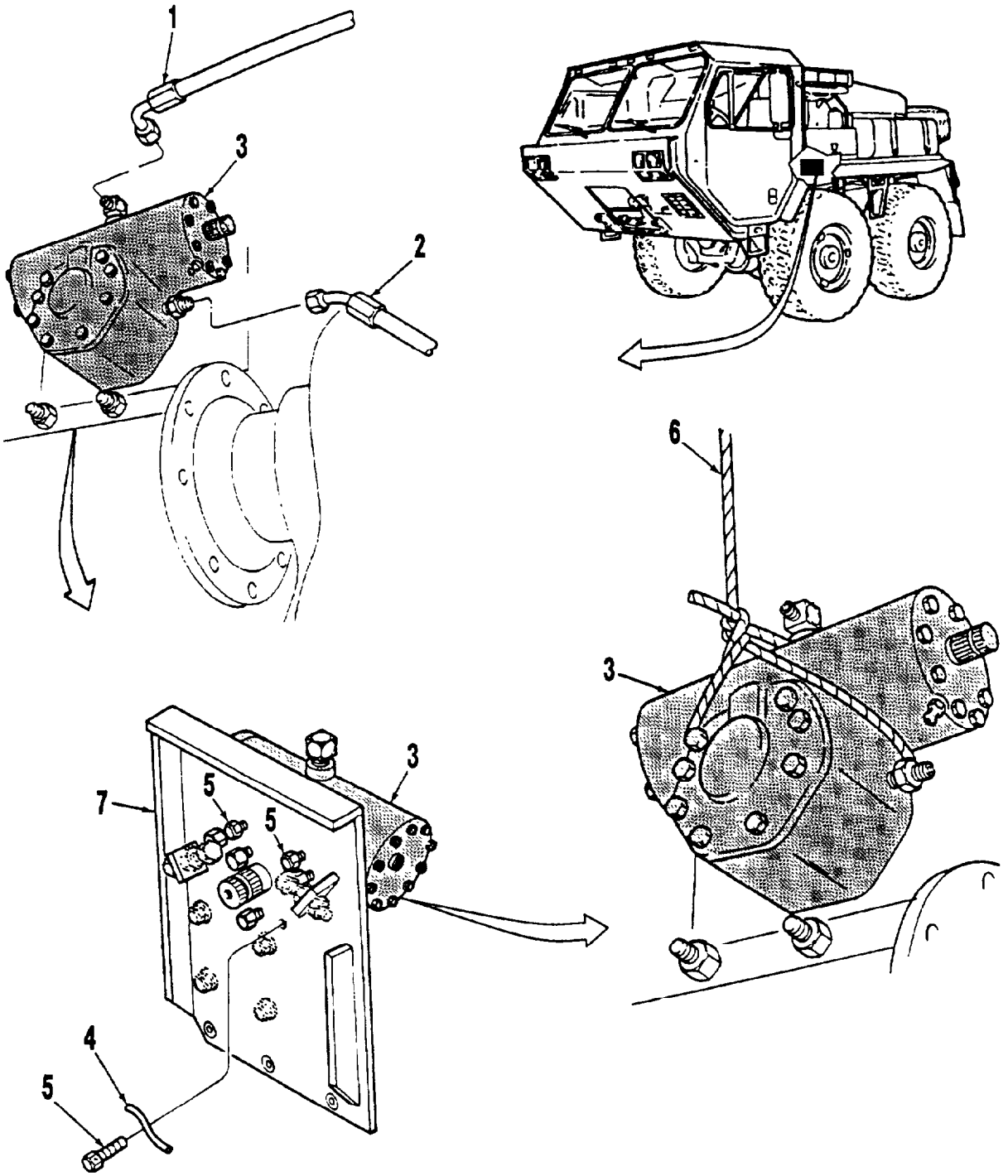

1. Hydraulic Line
2. Hydraulic Line
3. Power Steering Gear
4. Lock Wire
5. Capscrew (8)
6. Sling
7. Frame

Figure 2-176. Power Steering Gear

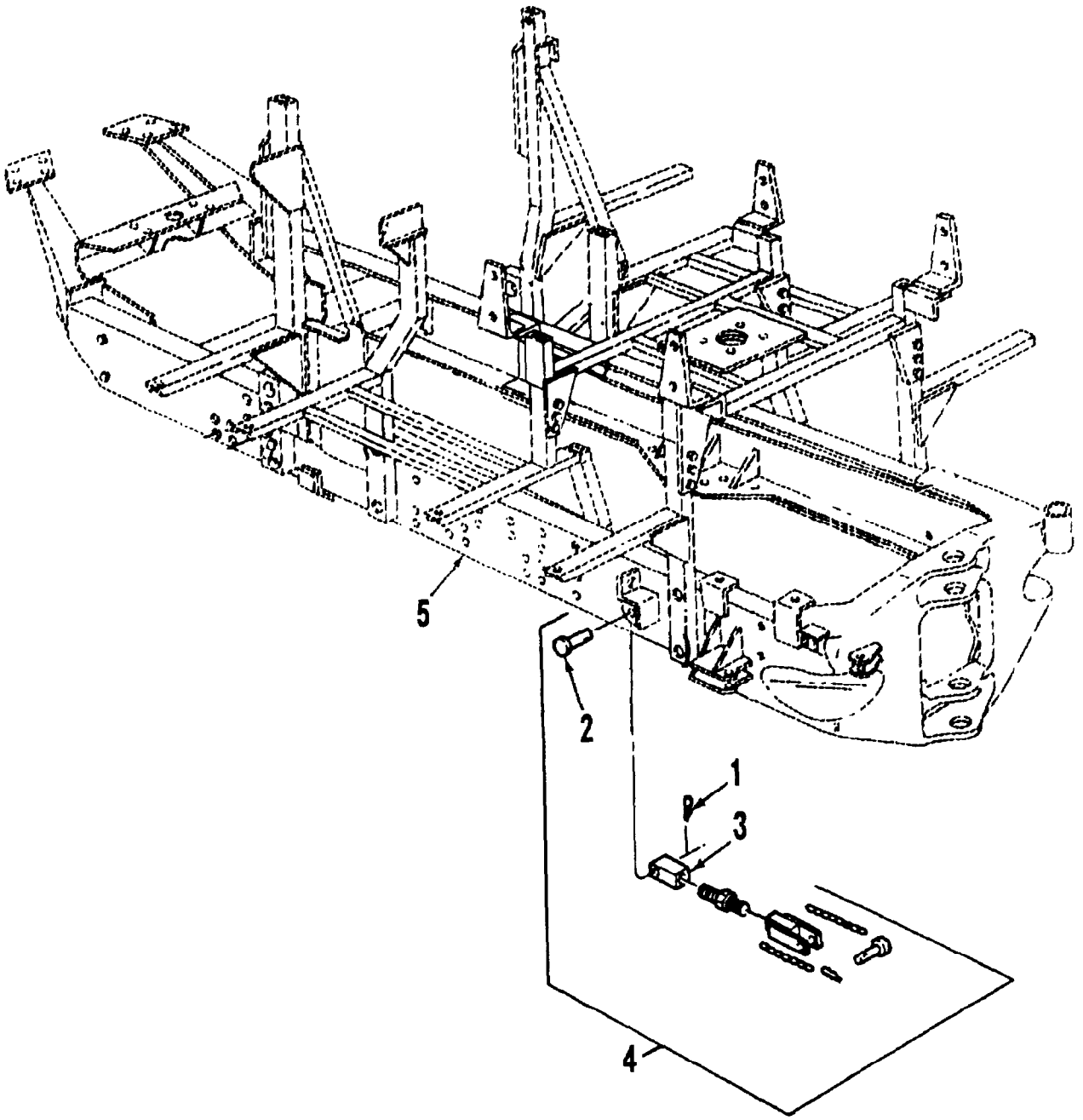

1. Cotter Hairpin
2. Pin
3. Upper Lockout Strut Suspension Lock Link
4. Lockout Strut
5. Frame Assembly

Figure 2-177. Lockout Struts

2-150. CHASSIS WIRING HARNESS

WARNING

To prevent personal injury, disconnect batteries. Do not wear watches, rings, and other jewelry when working on electrical components.

NOTE

Remove nylon ties and clamps as necessary from wiring harness to allow removal from frame.

a. Remove nut (1, Figure 2-178), three terminals (2, 3, and 4), star washer (5), and capscrew (6). Discard star washer (5).

NOTE

Perform step a.1 on LVSA1 series vehicles only.

a.1. Remove locknut (6.1), three terminals (6.2, 6.2, and 6.4), and capscrew (6.5). Discard locknut (6.1).

b. Disconnect plug (7).

c. Remove nut (8), capscrew (9), and ground wire terminal (10) from bracket (11).

NOTE

Perform step c.1 on LVSA1 series vehicles only.

c.1. Remove locknut (11.1), ground wire terminal (11.2), and capscrew (11.3) from bracket (11). Discard locknut (11.1).

d. Unplug connectors (12 and 13) from connectors (14 and 15).

e. Remove two nuts (16), lockrings (17), and connectors (14 and 15). Discard lockrings (17).

NOTE

Step f. works for both lockout strut connectors.

f. Remove connector cover (18) from connector (21).

g. Remove nut (19), lockring (20), and connector (21) from bracket (23). Discard lockring (20).

h. Remove wiring harness (22) from frame assembly (24).

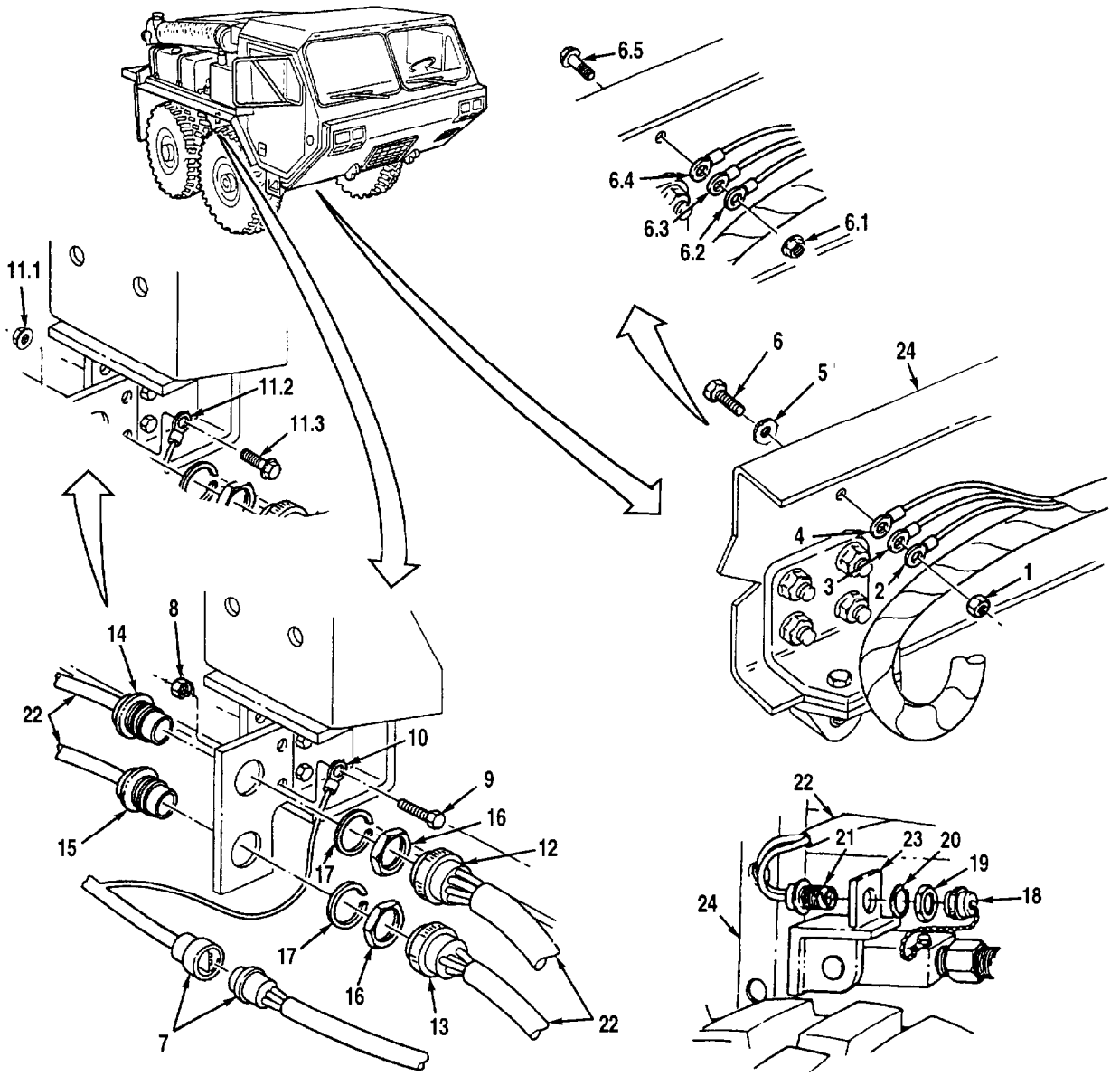

1. Nut
2. Terminal
3. Terminal
4. Terminal
5. Star Washer
6. Capscrew
6.1. Locknut*
6.2. Terminal*
6.3. Terminal*
6.4. Terminal*
6.5. Capscrew*
7. Plug
8. Nut
9. Capscrew
10. Ground Wire Terminal
11. Bracket
11.1. Locknut*
11.2. Ground Wire Terminal*
11.3. Capscrew*
12. Connector
13. Connector
14. Connector
15. Connector
16. Nut (2)
17. Lockring (2)
18. Connector Cover
19. Nut
20. Lockring
21. Connector
22. Chassis Wiring Harness
23. Bracket
24. Frame Assembly

* LVSA1 Series Vehicles Only

Figure 2-178. Chassis Wiring Harness

2-151. DATA PLATES AND PLACARDS

NOTE

Data plates and placards are metal labels attached to parts of the MK48. They must be replaced if they become damaged or when a part they are mounted on is replaced. The following procedure works for any of the MK48's data plates and placards secured with drive screws.

Some data plates and placards are secured with sheet metal screws. Use proper screwdriver to remove screws.

Some data plates and placards are secured with pop rivets. It may be necessary to drill out rivets to replace data plates and placards secured in this manner.

a. Remove four drive screws (1, Figure 2-179) using a small sharp chisel.

b. Remove data plate or placard (2) from mounting surface (3).

c. Remove thread ends (4) using a small punch and a hammer and driving thread ends (4) of drive screws (1) through mounting surface (3).

2-152. FRAME ASSEMBLY. Ensure all components, air lines, hydraulic lines, and wiring have been removed from MK48 frame assembly.

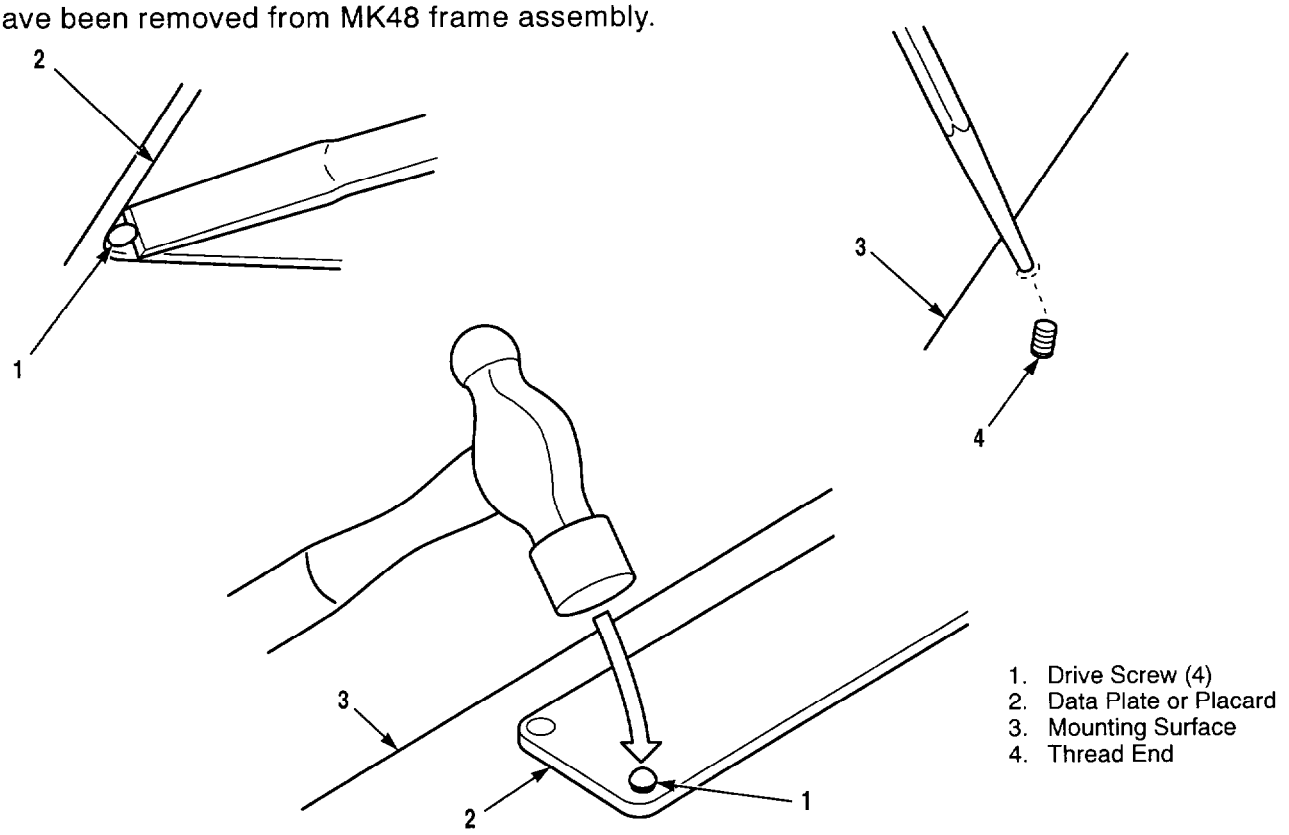

Figure 2-179. Data Plates and Placards

Section III. CLEANING, COATING, AND INSPECTION

2-153. CLEANING

a. General. Cleaning facilities shall include, at a minimum, steam, pressurized water and air, abrasive, and chemical cleaning systems. Refer to Air Force Technical Order (TO) 42C2-1-7 for more detailed information concerning cleaning and coating procedures, methods, and materials.

WARNING

Avoid contact with 1,1,1-Trichloroethane, Dry Cleaning Solvent P-D-680, epoxy paint stripper, alkaline rust and paint remover, and phosphoric acid corrosion remover. If solution comes in contact with the skin, wash thoroughly with running water. Use of rubber gloves conforming to Federal Specification (FED SPEC) ZZ-G-381, face shield conforming to L-F-36, and other protective equipment is required according to OSHA Standards.

Effluent from chemical cleaning and coating operations is toxic and hazardous. Such operations shall comply with all applicable state and federal environmental regulations including Title 40, Code of Federal Regulations, Protection of the Environment.

b. Specific Cleaning. Specific cleaning requirements for each part and component will be discussed in the Repair and Replacement Section of this Chapter. The specific instructions for carrying out these procedures and required materials follow:

(1) Electrical Components. Electrical components shall not be immersed in cleaning solutions which may soften or damage the insulation. Electrical components can generally be cleaned satisfactorily with a stiff-bristled brush and compressed air, 25 psi maximum pressure.

(a) Water Wash. Electrical components may be cleaned in an aqueous spray cleaning booth with compressed air and drying oven conforming to MIL-C-28998 if required.

1 Use warm water and detergent conforming to MIL-D-16791, Type I, NSN 7930-00-282-9699.

CAUTION

Circulating air drying ovens may have uncalibrated dials or controls for setting the oven temperature. These ovens shall be calibrated so the 120 °F temperature setting is red lined on the dial or control.

2 Dry with compressed air and place in drying oven at 120 °F, maximum, for eight hours minimum to remove moisture from connectors, wiring, and components.

WARNING

Avoid contact with 1,1,1-Trichloroethane, Dry Cleaning Solvent P-D-680, epoxy paint stripper, alkaline rust and paint remover, and phosphoric acid corrosion remover. If solution comes in contact with the skin, wash thoroughly with running water. Use of rubber gloves conforming to FED SPEC ZZ-G-381, face shield conforming to L-F-36, and other protective equipment is required according to OSHA Standards.

Adequate ventilation shall be provided while using solvents and cleaners. Prolonged breathing of vapors should be avoided. Do not use near heat or open flame. Avoid prolonged contact with skin. Use of rubber gloves conforming to FED SPEC ZZ-G-381, face shield conforming to L-F-36, and other protective equipment is required according to OSHA Standards.

CAUTION

Cleaning solvents may react with some encapsulants or plastics used for wire harness tubing, wire coatings, conformal coatings, gaskets, seals, et cetera (etc). Test on small area for softening or other adverse reactions prior to general application.

(b) Solvent Cleaning

1 1,1,1-Trichloroethane. Armatures, windings, and wiring that have been contaminated by grease or oil may be cleaned by brushing with degreasing solvent, 1,1,1-Trichloroethane, Technical (Tech), FED SPEC O-T-620, Type I, NSN 6810-00-551-1487. Dry with compressed air immediately, 25 psi maximum pressure, to prevent softening of insulation.

2 Isopropyl Alcohol, FED SPEC TT-I-735, NSN 6810-00-855-6160 may also be used to clean electrical components. Use of a small brush to aid in cleaning may be necessary.

(2) Bearings

WARNING

Adequate ventilation shall be provided while using solvents and cleaners. Prolonged breathing of vapors should be avoided. Do not use near heat or open flame. Avoid prolonged contact with skin. Use of rubber gloves conforming to FED SPEC ZZ-G-381, face shield conforming to L-F-36, and other protective equipment is required according to OSHA Standards.

To prevent personal injury and possible damage to bearings, do not spin bearings with compressed air. Refer to TM 9-214 for care and maintenance of bearings.

(a) Ball and Roller Bearings

1 Unsealed ball and roller bearings shall be cleaned with 1,1,1-Trichloroethane, Tech, FED SPEC O-T-620, Type I solvent.

2 If bearings are extremely dirty or are filled with hardened grease, allow to soak to loosen the caked material. Use a soft-bristled nonmetallic brush to aid in cleaning and flush solvent back and forth between the races to remove loosened dirt, grit, and abrasive particles.

3 Drain surplus solvent from bearings and allow remainder to evaporate.

4 Immediately after cleaning, lubricate bearings with Grease, Aircraft, General Purpose, Wide Temperature Range, MIL-G-81322, NSN 9150-00-935-5851.

NOTE

Bearings which will not be reassembled immediately should be wrapped in Barrier Material, Grease, NSN 8135-00-543-6574 or otherwise protected from dust and moisture pending reuse.

New bearings are lubricated by the manufacturer and such lubrication shall not be removed prior to use.

Ball and roller bearings which incorporate grease retainers are lubricated for life by the manufacturer. They shall not be cleaned in solvents which would remove their permanent lubricants. The exteriors may be cleaned by wiping with a cloth moistened with 1,1,1-Trichloroethane, Tech, FED SPEC O-T-620, Type I solvent.

(b) Needle Bearings. Needle bearings are 100 percent mandatory replacement items. Pack new bearings with Silo White Lubricant, All Purpose Lithium Grease 5555 or equivalent.

WARNING

Dry cleaning solvents are flammable. Do not clean parts near an open flame or in a smoking area. Contact with skin may cause irritation or cracking. Use of rubber gloves conforming to FED SPEC ZZ-G-381, face shield conforming to L-F-36, and other protective equipment is required according to OSHA Standards.

(3) Machined Surfaces. Unless specific instructions to the contrary are provided in the relevant overhaul instructions or in this DMM, parts with machined surfaces, other than sealed bearings and electrical components, are to be cleaned with Dry Cleaning Solvent, FED SPEC P-D-680, Type II and dried with compressed air (25 psi maximum pressure). Normal precautions shall be used to avoid scratching or nicking polished bearing surfaces and sealing surfaces.

WARNING

Adequate ventilation shall be provided while using solvents and cleaners. Prolonged breathing of vapors should be avoided. Do not use near heat or open flame. Avoid prolonged contact with skin. Use of rubber gloves conforming to FED SPEC ZZ-G-381, face shield conforming to L-F-36, and other protective equipment is required according to OSHA Standards.

(4) Nonmetallic Parts. Parts made of natural or synthetic rubber, fiber, cork, or other nonmetallic materials shall be cleaned with 1,1,1-Trichloroethane, Tech, FED SPEC O-T-620, Type I solvent.

(5) Aluminum Parts

(a) General. Aluminum parts and components of the MK48 may be cleaned using procedures in FED SPEC TT-C-490, MIL-P-116, and TO-42C2-1-7.

WARNING

To prevent serious personal injury when abrasive blasting with high air pressure (120-150 psi), in open areas or confined areas, personnel shall wear full-body protective equipment conforming to OSHA Standards.

To prevent serious personal injury when bead blasting, roto blasting, or tumble blasting, personnel shall wear proper eye, ear, and breathing equipment conforming to OSHA Standards.

When cleaning with compressed air, regulate to 25 psi maximum. Eyeshields must be worn to prevent injury to the eyes or complete loss of sight.

(b) Abrasive Blast. Subject parts to a high velocity stream of glass beads conforming to MIL-G-9954, Size 8, NSN 5350-00-012-1869. Blow off grit and dust with compressed air, 25 psi maximum pressure.

(6) Steel Parts. Ferrous metal parts and components of the MK48 may be cleaned using one of the following methods or other methods as detailed in the above references as required.

WARNING

Avoid contact with 1,1,1-Trichloroethane, Dry Cleaning Solvent P-D-680, epoxy paint stripper, alkaline rust and paint remover, and phosphoric acid corrosion remover. If solution comes in contact with the skin, wash thoroughly with running water. Use of rubber gloves conforming to FED SPEC ZZ-G-381, face shield conforming to L-F-36, and other protective equipment is required according to OSHA Standards.

CAUTION

Aluminum parts are rapidly attacked by alkaline cleaners. Examine parts carefully to ensure that aluminum components are not immersed in alkaline cleaners.

(a) Alkaline Cleaning. Immerse ferrous metal parts in hot alkaline cleaner to remove corrosion and paint. Use methods and materials according to MIL-C-46156, Alkaline Rust and Paint Remover, NSN 6850-00-935-5853. Immersion rinse and dry.

(b) Abrasive Blasting. Cleaning shall be effected by subjecting parts to a high velocity stream of abrasive particles conforming to MIL-S-851, Type I, 80 grit, NSN 5350-00-107-1284.

(c) Phosphoric Acid Cleaning. Corrosion removal shall be accomplished by immersion of parts or components in Corrosion Removing Compound, Phosphoric Acid Base, MIL-C-10578, NSN 6850-00-656-1291.

WARNING

To prevent personal injury when steam cleaning, personnel shall wear proper protectve equipment conforming to OSHA Standards.

(7) Steam Cleaning. Cleaning shall be accomplished by subjecting parts to vapor pressure and cleaning compound solution. Use cleaning compound conforming to MIL-C-43616, NSN 6850-01-045-7931. Pressure rinse parts after cleaning.

WARNING

Dry cleaning solvents are flammable. Do not clean parts near an open flame or in a smoking area. Contact with skin may cause irritation or cracking. Use of rubber gloves conforming to FED SPEC ZZ-G-381, face shield conforming to L-F-36, and other protective equipment is required according to OSHA Standards.

(8) Hand Cleaning. Cleaning shall be accomplished by wiping surfaces with Dry Cleaning Solvent, FED SPEC P-D-680, Type II, NSN 6850-00-285-8011, and allowing parts to air dry. Use Detergent, General Purpose (LIQUID NONIONIC), MIL-D-16791, Type I, NSN 7930-00-282-9699 and water to hand clean all lenses.

WARNING

Adequate ventilation shall be provided while using solvents and cleaners. Prolonged breathing of vapors should be avoided. Do not use near heat or open flame. Avoid prolonged contact with skin. Use of rubber gloves conforming to FED SPEC ZZ-G-381, face shield conforming to L-F-36, and other protective equipment is required according to OSHA Standards.

(9) Vapor Degreasing. Immerse parts in the vapor phase of a Vapor Degreaser conforming to MIL-D-45950. Use 1,1,1-Trichloroethane, Tech, FED SPEC O-T-620, Type I, NSN 6810-00-551-1487 as the solvent. Refer to MIL-P-116, process C-7 and TO 42C2-1-7.

WARNING

Avoid contact with epoxy paint remover. If solution comes in contact with the skin, wash thoroughly with running water. Use of rubber gloves conforming to FED SPEC ZZ-G-381, face shield conforming to L-F-36, and other protective equipment is required according to OSHA Standards.

(10) Paint Removal. Immerse parts in Cold Epoxy Paint Remover, MIL-R-46116, NSN 8010-01-035-3356. Immersion rinse and dry.

2-154. COATING

WARNING

Avoid contact with phosphate coating compounds, chromium plating compounds, and conversion coating compounds. If solution comes in contact with the skin, wash thoroughly with running water. Use of rubber gloves conforming to FED SPEC ZZ-G-381, face shield conforming to L-F-36, and other protective equipment is required according to OSHA Standards.

Effluent from chemical cleaning and coating operations is toxic and hazardous. Such operations shall comply with all applicable state and federal environmental regulations including Title 40, Code of Federal Regulations, Protection of the Environment.

a. General. Coating facilities shall include, at a minimum, steam, pressurized water and air, conversion coating facilities, phosphate coating facilities, and industrial painting facilities.

b. Specific Coating Procedures. Specific coating requirements for each part and component will be discussed in Section IV, Repair and Replacement, of this Chapter. The specific procedures for applying these coatings follow:

(1) Phosphate Coating

NOTE

Oil must be completely removed prior to phosphating. Oil will contaminate phosphating solutions.

(a) Phosphate coat parts according to Department of Defense (DOD)-P-16232 using phosphating materials conforming to MIL-P-50002, Type Z, NSN 6850-00-573-7050. Refer to TO 42C2-1-7 and MIL-HDBK-205 for more detailed instructions.

(b) Pressure rinse parts with clean water immediately upon removal from phosphating solution, then immersion rinse in clean water.

(c) Final rinse parts in a chromic acid solution prepared according to DOD-P-16232 using Chromic Acid, Tech, FED SPEC O-C-303, NSN 6810-00-264-3939.

(d) Thoroughly dry parts with compressed air, 25 psi maximum pressure.

(2) Conversion Coating. Aluminum parts and components of the MK48 shall be conversion coated prior to painting or as a final finish when required. Conversion coating materials shall conform to MIL-C-81706 and be applied according to MIL-C-5541. Refer to MIL-STD-171 and TO 42C2-1-7 for more detailed information.

(3) Hard Chrome Plating. Perform hard chromium plating according to FED SPEC QQ-C-320, Class 2, Chromium Plating (Electrodeposited) for Repair of Shafting. Also refer to Air Force TO 42C2-1-7 for methods and materials.

(a) Prepare chromium plating solutions to conform to 33 ounces (oz) per gallon, Chromic Acid, Tech, FED SPEC O-C-303, NSN 6810-00-264-3939 and .33 oz per gallon sulfate.

(b) Operate chromium plating solution at 130 °F.

(c) Apply chromium by electrodeposition to required thickness.

(4) Internal Reservoir Coating (air reservoirs)

(a) Pour Coating Compound, Primer, Epoxy, conforming to MIL-P-52192, NSN 8010-00-082-1714 in the reservoir to coat all interior surfaces.

(b) Cap all tank openings to prevent spillage.

(c) Slowly rotate reservoir, first in a clockwise direction and then end over end to ensure that all interior surfaces are coated.

(d) Inspect interior of reservoir visually to ensure that a uniform complete coating has been achieved.

(e) Pour residual coating in next tank or discard if it can not be used in 24 hours. Pot life after mixing is 24 hours at 70 °F.

(f) Since all coating material cannot be removed by pouring, place reservoir in a position that will cause the coating to flow to a corner that is accessible to a suction pump. Remove remainder of excess coating.

(g) Place reservoir in oven (preheated to 150 °F) and cure for 2 hours. Remove reservoir from oven and cool for 12 hours.

(5) Paint and Primer Coating

WARNING

Adequate ventilation shall be provided during painting operations. Approved safety equipment to protect eyes and lungs shall be worn by personnel engaged in painting. OSHA Safety and Health Regulations apply.

(a) Parts and components which are too large to be conversion coated or phosphate coated, or components which contain both aluminum and steel parts shall be primed immediately after cleaning. Prime all parts according to TM 4750-15/1.

(b) Parts and components shall be painted according to TM 4750-15/1.

2-155. INSPECTION

a. Specific inspection requirements for each part and component will be discussed in Section IV, Repair and Replacement, of this Chapter. The provisions of Technical Inspection Procedures for Maintenance and Repair Standards, Technical Instruction (TI) 11240-50/9 and MIL-STD-105 shall be applied.

b. After assembly, a final inspection by quality control personnel shall be performed. Refer to Section VIII.

Section IV. REPAIR AND REPLACEMENT

2-156. REPAIR AND REPLACEMENT. Instructions for disassembly, cleaning, inspection, repair, and assembly of parts and components disassembled from the Power Unit, Front, 12-1/2 Ton, 4x4, MK48, Mod 0, are arranged in order of removal. Disassemble, clean, inspect, repair, test, and assemble parts and components as necessary to effect overhaul or IROAN repair procedures.

2-157. BATTERY CABLES, BATTERIES, AND BATTERY BOX

a. Disassembly

(1) Batteries. No disassembly required.

(2) Battery Box

(a) Remove four locknuts (1, Figure 2-180) and capscrews (2) from insulator (4), gasket (6), slave connector (3), eyelet (8), and battery box (7). Discard locknuts (1).

(b) Remove insulator (4), cover (5), slave connector (3), and gasket (6) from battery box (7). Discard gasket (6).

(3) Slave Connector. No disassembly required.

(4) Battery Cables. No disassembly required.

b. Cleaning. Refer to Section III.

WARNING

To prevent personal injury when steam cleaning, personnel shall wear proper protective equipment conforming to OSHA Standards.

Adequate ventilation shall be provided while using solvents and cleaners. Prolonged breathing of vapors should be avoided. Do not use near heat or open flame. Avoid prolonged contact with skin. Use of rubber gloves conforming to FED SPEC ZZ-G-381, face shield conforming to L-F-36, and other protective equipment is required according to OSHA Standards.

To prevent serious personal injury when abrasive blasting with high air pressure (120-150 psi), in open areas or confined areas, personnel shall wear full-body protective equipment conforming to OSHA Standards.

(1) Steam clean battery box and battery cables to remove dirt, grease, and excess battery acids.

(2) Abrasive blast battery box to remove paint, rust, and corrosion.

(3) Paint battery box according to TM 4750-15/1.

(4) Coat inside of battery box with acid resistant paint according to MIL-C-450.

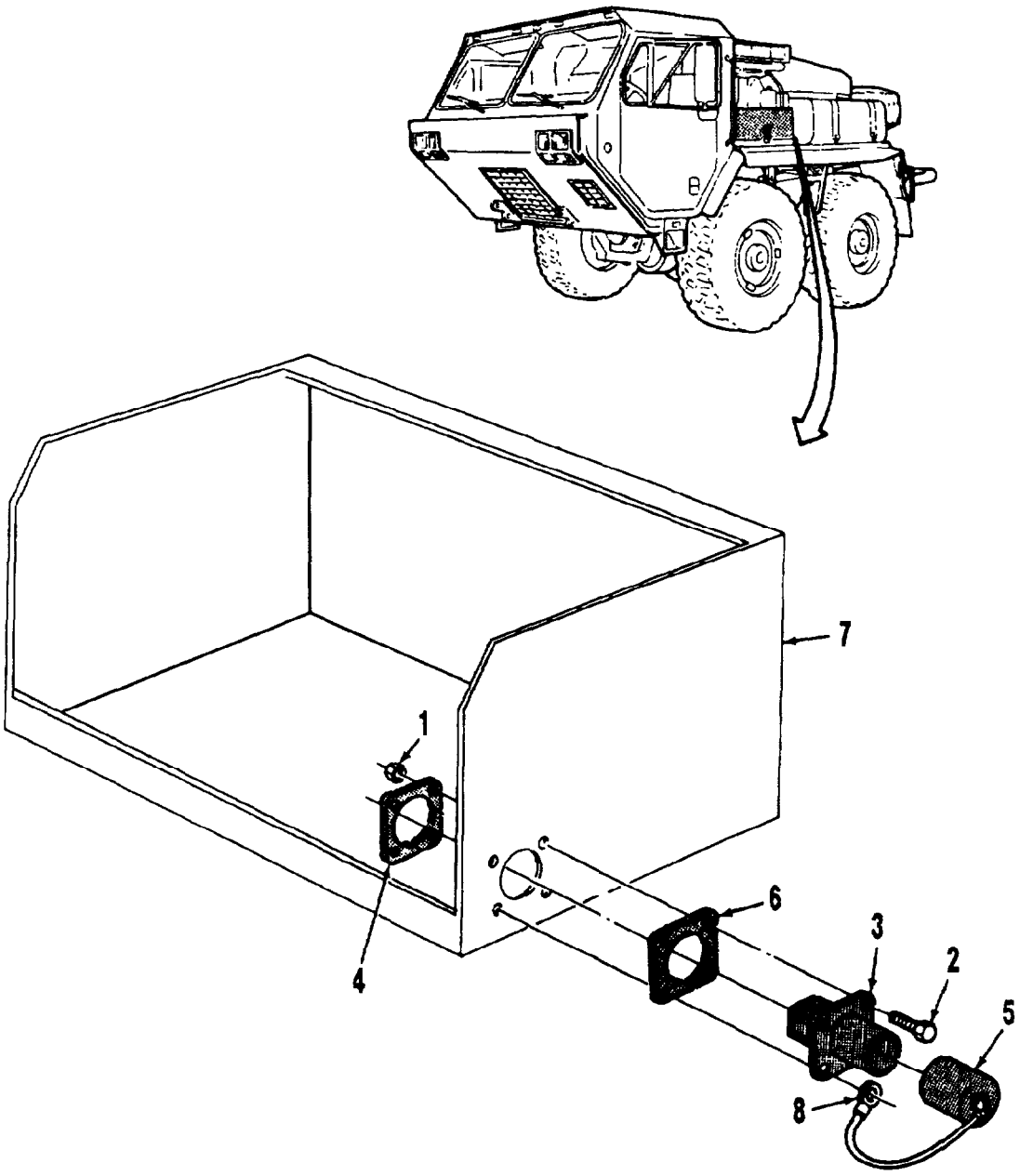

1. Locknut (4)
2. Capscrew (4)
3. Slave Connector
4. Insulator
5. Cover
6. Gasket
7. Battery Box
8. Eyelet

Figure 2-180. Battery Box Disassembly/Assembly

c. Inspection

(1) Battery Box. Inspect battery box for cracks, breaks, corrosion, and deformation.

(2) Slave Connector

(a) Inspect slave connector for cracks, breaks, and damaged threads.

(b) Inspect cover for cracks, breaks, and damage.

(3) Battery Cables

(a) Inspect battery cables for breaks, cracks, frays, or deteriorating insulation.

(b) Inspect battery cable terminals for corrosion and cracks.

d. Repair

(1) Batteries. Replace batteries 100 percent.

(2) Battery Box

(a) Repair cracks and breaks by welding. Refer to TM 9-237 for welding applications.

(b) Remove corrosion and treat battery box with corrosion preventative. Refer to TM 3080-50 for corrosion control procedures.

(c) Straighten bends and dents using accepted sheet metal practices.

(3) Slave Connector

(a) Replace cracked or damaged slave connector.

(b) Replace cracked or damaged cover.

(4) Battery Cables

(a) Replace corroded or cracked battery cable terminals.

(b) Replace broken, cracked, frayed, or deteriorated battery cables.

e. Assembly

(1) Batteries. No assembly required.

(2) Battery Box

(a) Install cover (5, Figure 2-180) and new gasket (6) on slave connector (3).

(b) Install four capscrews (2) in slave connector (3). Ensure that one capscrew (2) goes through eyelet (8).

(c) Install slave connector (3) and cover (5) with four capscrews (2) in battery box (7).

(d) Install insulator (4) on four capscrews (2) and slave connector (3) inside battery box (7).

(e) Install four new locknuts (1) on capscrews (2). Tighten locknuts (1) securely.

(3) Slave Connector. No assembly required.

(4) Battery Cables. No assembly required.

2-158. WHEEL AND TIRE ASSEMBLY

a. Disassembly. Refer to TM 2320-20/12 for disassembly of wheel and tire assembly (non run flat and run flat).

b. Cleaning. Refer to Section III.

WARNING

To prevent personal injury when steam cleaning, personnel shall wear proper protective equipment conforming to OSHA Standards.

Adequate ventilation shall be provided while using solvents and cleaners. Prolonged breathing of vapors should be avoided. Do not use near heat or open flame. Avoid prolonged contact with skin. Use of rubber gloves conforming to FED SPEC ZZ-G-381, face shield conforming to L-F-36, and other protective equipment is required according to OSHA Standards.

To prevent serious personal injury when abrasive blasting with high air pressure (120-150 psi), in open areas or confined areas, personnel shall wear full-body protective equipment conforming to OSHA Standards.

(1) Steam clean rim and rim parts to remove dirt and grease.

(2) Abrasive blast rim and rim parts to remove paint, rust, and corrosion.

NOTE

Do not paint sealing area of rim. Paint in this area prevents tire from sealing properly.

(3) Paint rim and rim parts according to TM 4750-15/1.

c. Inspection

(1) Inspect rim and rim parts for cracks, pits, bends, and other damage.

(2) Inspect lockring groove (6, Figure 2-2) and O-ring groove (7) for burs and damage.

(3) Inspect tire (4) for cuts, wear, gouges, and weather checking.

WARNING

Do not weld, heat, or braze rim parts that are cracked, bent, broken, or damaged. Repaired parts may not hold up in service. Always replace with new parts of same size and type.

d. Repair. Replace cracked, bent, broken, or damaged parts.

e. Assembly. Refer to TM 2320-20/12 for assembly of wheel and tire assembly (non run flat and run flat).

2-159. GRILLE, SKID PLATE, AND SKID PLATE FRAME

a. Disassembly. No further disassembly required for grille (4, Figure 2-5), skid plate (12, Figure 2-6), or skid plate frame (23).

b. Cleaning. Refer to Section III.

WARNING

To prevent personal injury when steam cleaning, personnel shall wear proper protective equipment conforming to OSHA Standards.

Adequate ventilation shall be provided while using solvents and cleaners. Prolonged breathing of vapors should be avoided. Do not use near heat or open flame. Avoid prolonged contact with skin. Use of rubber gloves conforming to FED SPEC ZZ-G-381, face shield conforming to L-F-36, and other protective equipment is required according to OSHA Standards.

To prevent serious personal injury when abrasive blasting with high air pressure (120-150 psi), in open areas or confined areas, personnel shall wear full-body protective equipment conforming to OSHA Standards.

(1) Steam clean grille (4, Figure 2-5), skid plate (12, Figure 2-6), and skid plate frame (23) to remove dirt and grease.

(2) Abrasive blast grille (4, Figure 2-5), skid plate (12, Figure 2-6), and skid plate frame (23) to remove paint, rust, and corrosion.

(3) Paint grille (4, Figure 2-5), skid plate (12, Figure 2-6), and skid plate frame (23) according to TM 4750-15/1.

c. Inspection. Inspect grille (4, Figure 2-5), skid plate (12, Figure 2-6), and skid plate frame (23) for deformation, cracks, dents, and broken welds.

d. Repair

(1) Straighten deformed or dented parts using accepted sheet metal practices.

(2) Repair cracks or breaks by welding. Refer to TM 9-237 for welding applications.

e. Assembly. No assembly required for grille (4, Figure 2-5), skid plate (12, Figure 2-6), and skid plate frame (23).

2-160. EXTERIOR ACCESS PANELS

a. Disassembly. No disassembly required.

b. Cleaning. Refer to Section III.

WARNING

To prevent personal injury when steam cleaning, personnel shall wear proper protective equipment conforming to OSHA Standards.

Adequate ventilation shall be provided while using solvents and cleaners. Prolonged breathing of vapors should be avoided. Do not use near heat or open flame. Avoid prolonged contact with skin. Use of rubber gloves conforming to FED SPEC ZZ-G-381, face shield conforming to L-F-36, and other protective equipment is required according to OSHA Standards.

To prevent serious personal injury when abrasive blasting with high air pressure (120-150 psi), in open areas or confined areas, personnel shall wear full-body protective equipment conforming to OSHA Standards.

(1) Steam clean exterior access panels to remove dirt and grease.

(2) Abrasive blast exterior access panels to remove paint, rust, and corrosion.

(3) Paint exterior access panels according to TM 4750/15-1.

c. Inspection. Inspect exterior access panels for deformation, cracks, dents, and broken welds.

d. Repair

(1) Straighten deformed or dented exterior access panels using accepted sheet metal practices.

(2) Repair cracks or breaks by welding. Refer to TM 9-237 for welding applications.

e. Assembly. No assembly required.

2-161. BEACON LIGHT AND MOUNTING BRACKET

a. Disassembly

(1) Beacon Light

(a) Remove screw (1, Figure 2-181), clamp (2), and lens (3) from base (10).

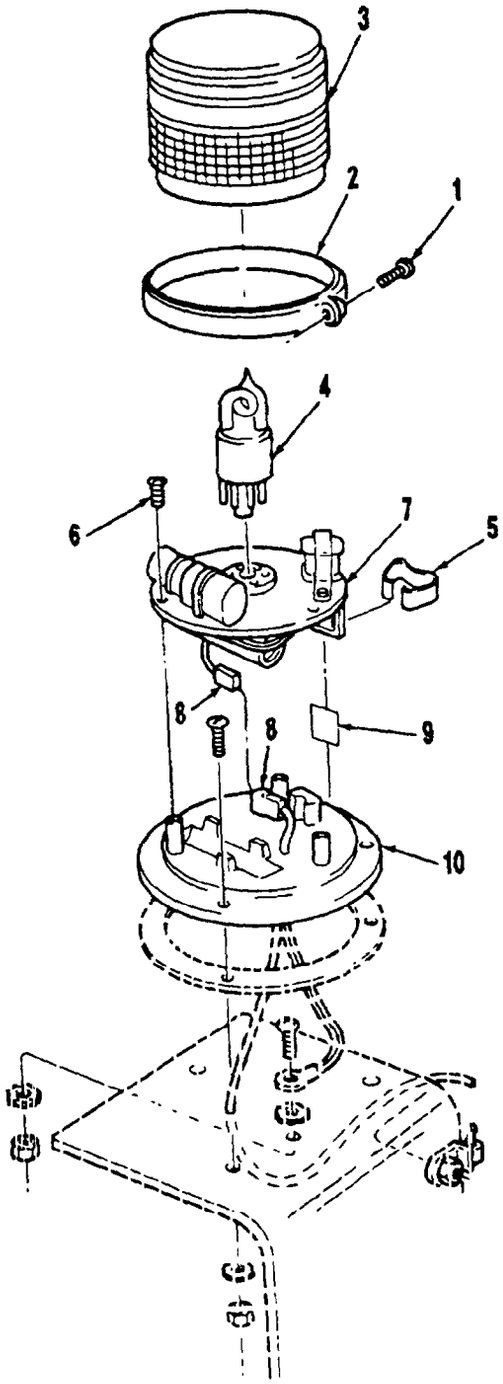

1. Screw
2. Clamp
3. Lens
4. Strobe Light Tube
5. Clip
6. Screw (3)
7. Power Supply Assembly
8. Plug
9. Insulator
10. Base

Figure 2-181. Beacon Light Disassembly/Assembly

(b) Remove strobe light tube (4) from power supply assembly (7).

(c) Remove clip (5) and three screws (6) from power supply assembly (7) and base (10).

(d) Lift power supply assembly (7) up from base (10) and disconnect plug (8).

(e) Remove power supply assembly (7) from base (10).

(f) Remove insulator (9) from power supply assembly (7).

(2) Mounting Bracket. No disassembly required.

b. Cleaning. Refer to Section III.

WARNING

Adequate ventilation shall be provided while using solvents and cleaners. Prolonged breathing of vapors should be avoided. Do not use near heat or open flame. Avoid prolonged contact with skin. Use of rubber gloves conforming to FED SPEC ZZ-G-381, face shield conforming to L-F-36, and other protective equipment is required according to OSHA Standards.

(1) Remove loose dirt with cloth or small brush.

(2) Solvent clean beacon light parts using Isopropyl Alcohol, FED SPEC TT-I-735. Allow to air dry.

(3) Wash beacon light lens with warm water and detergent conforming to MIL-D-16791. Rinse thoroughly and allow to air dry.

c. Inspection

(1) Inspect beacon light lens for cracks, breaks, and damage.

(2) Inspect strobe light tube for serviceability and damage.

(3) Inspect power supply assembly for cracks, breaks, and damage.

(4) Inspect wires and connectors for breaks, frays, shorts, and damage.

(5) Inspect base for burred or damaged threads, cracks, breaks, and damage.

(6) Inspect for damaged and missing parts.

d. Repair

(1) Replace beacon light parts failing inspection.

(2) Repair damaged threads according to TM 2350-45.

e. Assembly

(1) Connect plug (8) under power supply assembly (7).

NOTE

Ensure insulator (9, Figure 2-181) is placed between power supply assembly (7) and base (10).

(2) Install insulator (9) between power supply assembly (7) and base (10).

(3) Install power supply assembly (7) on base (10).

(4) Install clip (5) and three screws (6) in power supply assembly (7) and base (10). Tighten screws (6) securely.

(5) Install strobe light tube (4) in power supply assembly (7).

(6) Install beacon light lens (3), clamp (2), and screw (1) on base (10). Tighten screw (1) securely.

2-162. EXHAUST PIPE AND MUFFLER ASSEMBLY

a. Disassembly

WARNING

Exhaust pipe and muffler assembly is very heavy. To prevent personal injury, use a lifting device or help from assistant(s) when disassembling exhaust pipe and muffler assembly.

(1) Remove two nuts (18, Figure 2-9) and washers (19) from clamp (20).

(2) Remove exhaust pipe (3) and clamp (20) from muffler (17).

(3) Remove locknut (21) and capscrew (22) from clamp (16). Discard locknut (21).

(4) Remove clamp (16) from muffler (17).

(5) Remove two nuts (23), lockwashers (24), and washers (25) from clamp (26). Discard lockwashers (24).

(6) Remove rear mounting plate (11) and clamp (26) from muffler (17).

(7) Remove exhaust elbow (8) from muffler (17).

(8) Remove nut (5) and capscrew (6) from rain cap (7).

(9) Remove rain cap (7) from exhaust elbow (8)

(10) Remove three nuts (27), lockwashers (28), and capscrews (29) from heat shield (30). Discard lockwashers (28).

(11) Remove heat shield (30) from muffler (17).

(12) Remove two nuts (31), lockwashers (32), washers (33), and capscrews (34) from mounting bracket (48) and each rear mounting biscuit (35). Discard lockwashers (32).

(13) Remove four nuts (36), ten washers (37), four springs (38), plate (39), and two capscrews (40) from mounting bracket (41).

(14) Remove two nuts (42), lockwashers (43), clamp (44), and elbow (45). Discard lockwashers (43).

(15) Separate ball joint (46) and flange (47) from each other and elbow (45).

b. Cleaning. Refer to Section III.

WARNING

To prevent personal injury when steam cleaning, personnel shall wear proper protective equipment conforming to OSHA Standards.

Adequate ventilation shall be provided while using solvents and cleaners. Prolonged breathing of vapors should be avoided. Do not use near heat or open flame. Avoid prolonged contact with skin. Use of rubber gloves conforming to FED SPEC ZZ-G-381, face shield conforming to L-F-36, and other protective equipment is required according to OSHA Standards.

To prevent serious personal injury when abrasive blasting with high air pressure (120-150 psi), in open areas or confined areas, personnel shall wear full-body protective equipment conforming to OSHA Standards.

CAUTION

To prevent water or abrasives from entering the muffler when steam cleaning or abrasive blasting, seal the inlet and outlet pipes on muffler.

(1) Steam clean exhaust pipe and muffler assembly to remove dirt and grease.

(2) Abrasive blast exhaust pipe and muffler parts to remove paint, rust, and corrosion.

(3) Paint exhaust pipe and muffler assembly according to TM 4750-15/1.

c. Inspection

(1) Inspect exhaust pipe and muffler assembly for deformation, cracks, dents, holes, and broken welds.

(2) Inspect mounting biscuits and clamps for serviceability.

(3) Inspect springs for cracks, breaks, and collapsed condition.

d. Repair

(1) Straighten deformed or dented parts using accepted sheet metal practices.

(2) Repair cracks by welding. Refer to TM 9-237 for welding applications.

(3) Replace muffler if punctured or rusted through.

(4) Replace parts broken, damaged, or worn beyond repair.

e. Assembly

WARNING

Exhaust pipe and muffler assembly is very heavy. To prevent personal injury, use a lifting device or help from assistant(s) when assembling exhaust pipe and muffler assembly.

(1) Slide ball joint (46, Figure 2-9) and flange (47) together.

(2) Install elbow (45) in ball joint (46) with clamp (44), new lockwashers (43), and nuts (42). Tighten nuts (42) snugly at this time.

(3) Install two capscrews (40), plate (39), ten washers (37), four springs (38), and four nuts (36) to mounting bracket (41). Tighten nuts (36) snugly at this time.

(4) Install each rear mounting biscuit (35) on mounting bracket (48) using two capscrews (34), washers (33), new lockwashers (32), and nuts (31). Tighten nuts (31) snugly at this time.

(5) Install heat shield (30) on muffler (17) using three capscrews (29), new lockwashers (28), and nuts (27). Tighten nuts (27) snugly at this time.

(6) Install exhaust elbow (8) on outlet end of muffler (17).

(7) Install rain cap (7) on exhaust elbow (8) using capscrew (6) and nut (5). Tighten nut (5) securely.

(8) Install rear mounting plate (11) and clamp (26) on muffler (17).

(9) Install two washers (25), new lockwashers (24), and nuts (23) on clamp (26). Tighten nuts (23) snugly at this time.

(10) Install clamp (16) on muffler (17) using capscrew (22) and new locknut (21). Tighten locknut (21) snugly at this time.

(11) Install exhaust pipe (3) and clamp (20) on muffler (17) using two washers (19) and nuts (18). Tighten nuts (18) snugly at this time.

2-163. WORK LIGHTS

a. Disassembly

(1) Carefully insert a flat-tipped tool between sealed beam (1, Figure 2-182) and rubber housing (2).

(2) Pry gently and remove sealed beam (1) from rubber housing (2).

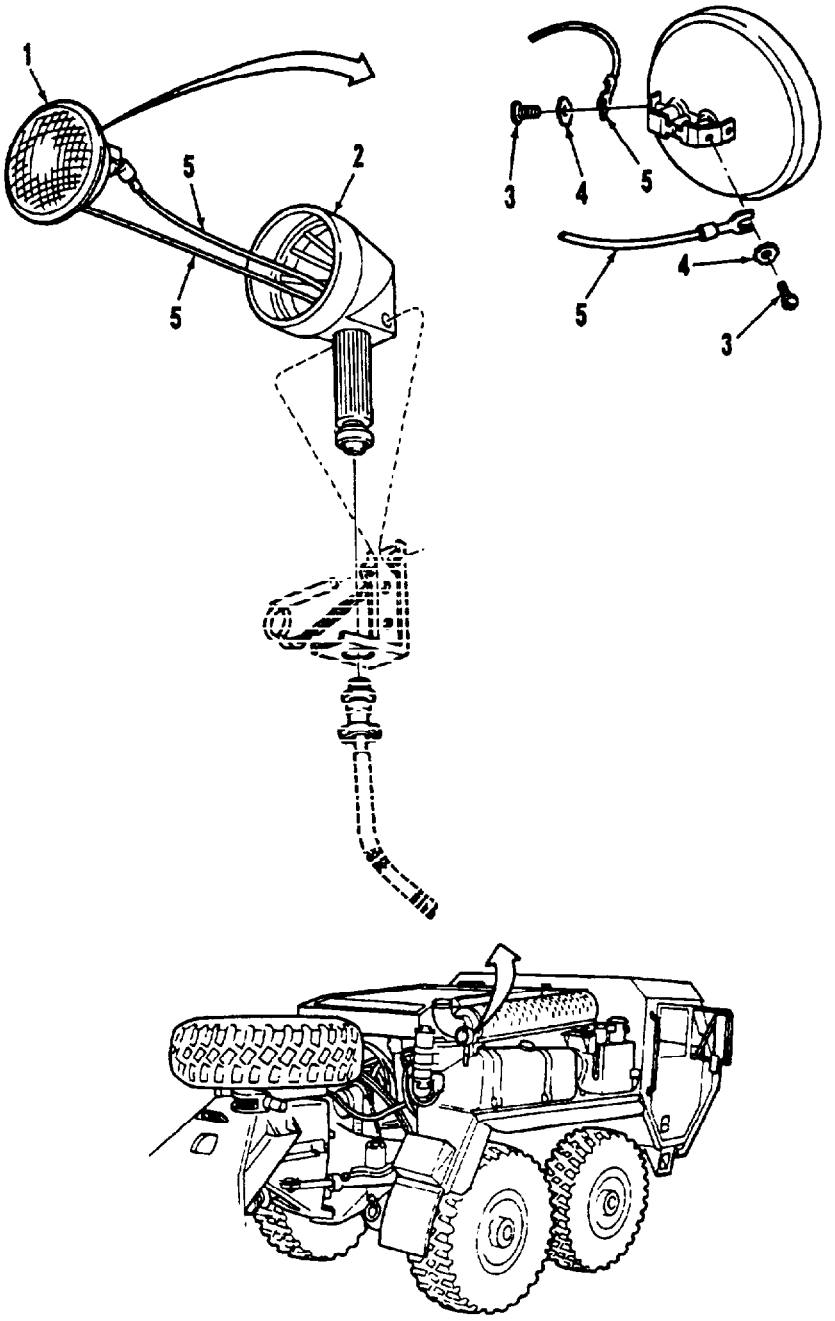

1. Sealed Beam
2. Rubber Housing
3. Screw (2)
4. Star Washer (2)
5. Wire (2) (No. 040)

Figure 2-182. Work Lights Disassembly/Assembly

(3) Remove two screws (3, Figure 2-182) and star washers (4) from sealed beam (1). Discard star washers (4).

(4) Remove two wires (5) from sealed beam (1).

b. Cleaning. Refer to Section III.

WARNING

Adequate ventilation shall be provided while using solvents and cleaners. Prolonged breathing of vapors should be avoided. Do not use near heat or open flame. Avoid prolonged contact with skin. Use of rubber gloves conforming to FED SPEC ZZ-G-381, face shield conforming to L-F-36, and other protective equipment is required according to OSHA Standards.

(1) Remove loose dirt with cloth or small brush.

(2) Solvent clean work light parts using Isopropyl Alcohol, FED SPEC TT-I-735. Allow work light parts to air dry.

c. Inspection

(1) Inspect work light for proper operation.

(2) Inspect for bent or broken connectors.

(3) Inspect for wiring for cracks, breaks, frays, bare spots, and damage.

d. Repair

(1) Straighten electrical connectors if necessary.

(2) Replace all parts failing inspection.

(3) Paint work light according to TM 4750-15/1.

e. Assembly

(1) Install two wires (5) with two new star washers (4) and screws (3). Tighten screws (3) securely.

(2) Install sealed beam (1) in rubber housing (2).

2-164. FUEL FILTERS, HAND PRIMING PUMP, AND MOUNTING BRACKET

a. Disassembly

(1) Fuel/Water Separator

WARNING

To prevent personal injury, disconnect batteries. Do not wear watches, rings, or other jewelry when working on electrical components.

NOTE

Tag all wires before removal to ensure proper installation.

Note location and position of fittings before removal to ensure proper installation

Fittings on LVSA1 fuel/water separators have changed from reducer bushing, nipple, tee, nipple, and adapter to adapter, street tee hex nipple, and adapter. When repairing non-A1 series vehicles, use new style hardware to replace old style hardware. Refer to TM 9-2320-297-24P for correct parts identification.

(a) Remove elbows (1 and 2, Figure 2-183) from street tee (3) and pressure switch (4) respectively.

(b) Remove pressure switch (4) from hex nipple (5).

(c) Deleted.

(d) Remove hex nipple (5) from bottom of street tee (3).

(e) Remove tee fitting (3).

(f) Deleted.

(g) Remove adapter (8) from housing (9).

(h) Remove elbows (10 and 11) from the end and top of cross fitting (12) respectively.

(i) Deleted.

(j) Remove adapter (14) from bottom of cross fitting (12).

(k) Remove cross fitting (12) from hex nipple (15).

(l) Remove hex nipple (15) from adapter (16).

(m) Remove adapter (16) from housing (9)

(n) Remove two clamps (17) from housing (9).

NOTE

Perform step (n.1) on LVSA1 series vehicles only.

(n.1) Remove two locknuts (17.1), washers (17.2), capscrews (17.3), and clamps (17.4) from housing (48).

(o) Remove tee handle (18) by turning counterclockwise.

(p) Remove O-ring (19) from tee handle (18). Discard O-ring (19).

(q) Remove lid (20) and gasket (21) from housing (9 or 48). Discard gasket (21).

(r) Remove filter element (22) from housing (9 or 48) by turning counterclockwise and lifting filter

NOTE

Drain valves on LVSA1 series vehicles have changed from an adapter, O-ring, and valve to a drain valve assembly. When repairing non-A1 vehicles, use new style hardware to replace the old style hardware. Refer to TM 9-2320-297-24P for correct parts identification.

(s) Remove drain valve assembly (23).

(t) Deleted.

(u) Remove four screws (27) from base (34 or 41) on bowl retainer (28).

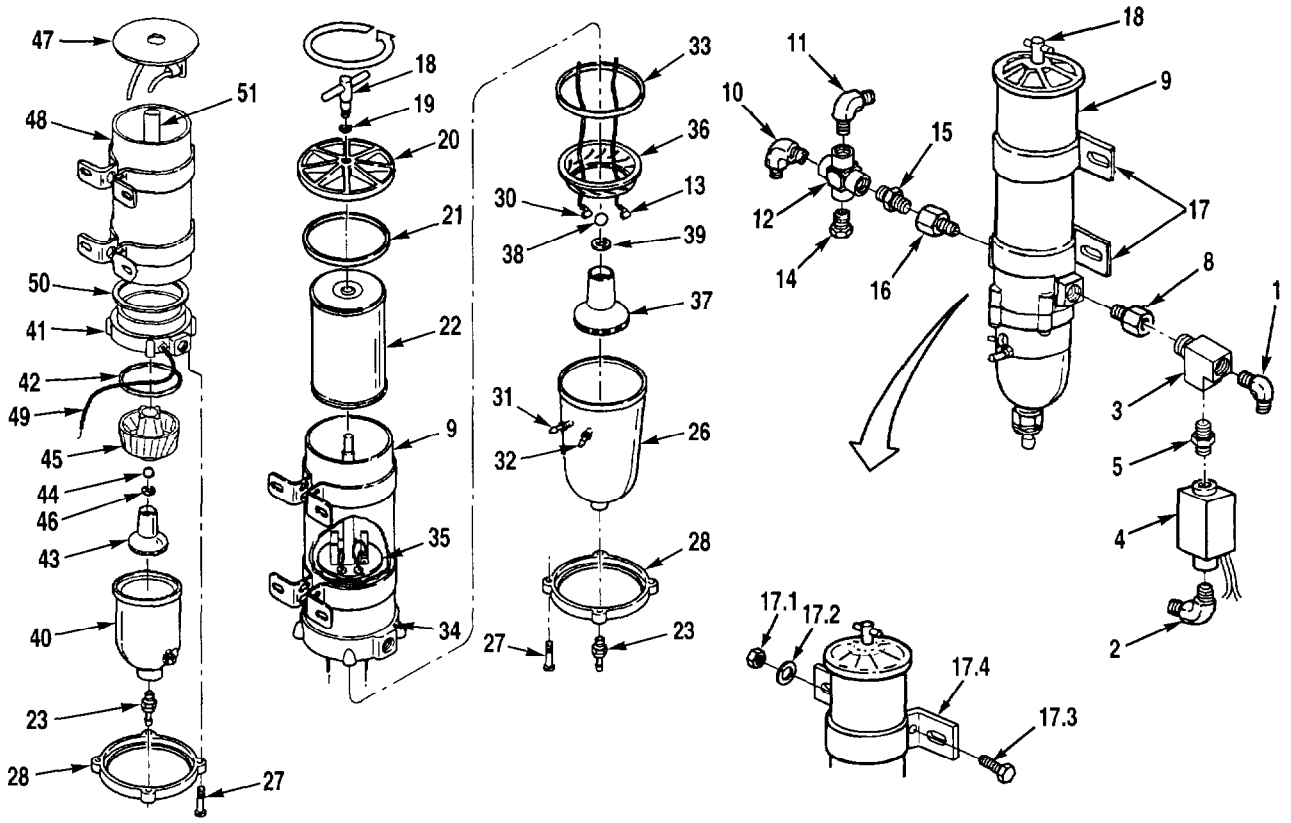

1. Elbow
2. Elbow
3. Street Tee
4. Pressure Switch
5. Hex Nipple
6. Deleted
7. Deleted
8. Adapter
9. Housing
10. Elbow
11. Elbow
12. Cross Fitting
13. Deleted
14. Adapter
15. Hex Nipple
16. Adapter
17. Clamp (2)
17.1. Locknut (2)*
17.2. Washer (2)*
17.3. Capscrew (2)*
17.4. Clamp (2)*
18. Tee Handle
19. O-Ring
20. Lid
21. Gasket
22. Filter Element
23. Drain Valve Assembly
24. Deleted
25. Deleted
26. Bowl
27. Screw (4)
28. Bowl Retainer
29. Wire
30. Wire
31. Terminal
32. Terminal
33. Gasket
34. Base
35. Heater Disc
36. Baffle
37. Turbine
38. Check Ball
39. Check Ball Gasket
40. Bowl*
41. Base*
42. Bowl Gasket*
43. Turbine*
44. Check Ball*
45. Baffle*
46. Check Ball Gasket*
47. Heater Disc*
48. Housing*
49. Wire*
50. Gasket*
51. Return Tube*

* LVSA1 Series Vehicles Only

Figure 2-183. Fuel/Water Separator Disassembly/Assembly

(v) Remove bowl retainer (28) from housing (9 or 48).

NOTE

Perform steps (z.1 thru z.9) on LVSA1 series vehicles only.

(w) Separate bowl (26) from housing (9) enough to tag and remove two wires (29 and 30) from terminals (31 and 32) inside bowl (26).

(x) Remove bowl (26) and gasket (33) from base (34). Discard gasket (33).

(y) Remove heater disc (35) from housing (9) by passing two wires (29 and 30) through baffle (36) and base (34).

(z) Remove turbine (37), baffle (36), check ball (38), and check ball gasket (39). Discard check ball gasket (39).

(z.1) Remove bowl (40) from base (41).

(z.2) Remove bowl gasket (42) from base (41). Discard bowl gasket (42).

(z.3) Unscrew turbine (43) and remove check ball (44) from base (41).

(z.4) Remove baffle (45) and check ball gasket (46) from base (41). Discard check ball gasket (46).

(z.5) Remove heater disc (47) from housing (48).

NOTE

Matchmark housing (48) and base (41).

(z.6) Remove heater feed wire (49) from base (41).

(z.7) Install housing (48) in a soft jawed vise.

(z.8) Remove housing (48) and gasket (50) from base (41). Discard gasket (50).

(z.9) Remove return tube (51) from base (41).

(2) Secondary Fuel Filter and Adapter. No further disassembly required.

(3) Hand Priming Pump and Mounting Bracket. No further disassembly required.

b. Cleaning. Refer to Section III.

WARNING

Adequate ventilation shall be provided while using solvents and cleaners. Prolonged breathing of vapors should be avoided. Do not use near heat or open flame. Avoid prolonged contact with skin. Use of rubber gloves conforming to L-F-36, and other protective equipment is required according to OSHA Standards.

When cleaning with compressed air, regulate to 25 psi maximum. Eyeshields must be worn to prevent injury to the eyes or complete loss of sight.

(1) Remove loose dirt with cloth or small brush.

(2) Solvent clean fuel/water separator parts using Dry Cleaning Solvent, FED SPEC P-D-680. Blow off excess dry cleaning solvent using compressed air 25 psi maximum.

(3) Wash bowl (26 or 40) with warm water and detergent conforming to MIL-D-16791. Rinse thoroughly and blow off excess water using compressed air 25 psi maximum.

c. Inspection

(1) Inspect fuel/water separator, bowl, and base, for cracks, breaks, deformation, and damage.

(2) Inspect gasket surfaces for scratches, nicks, gouges, and damage.

(3) Inspect threaded areas for crossed, smashed, burred, and damaged threads.

(4) Inspect all fittings for cracks, breaks, or clogged passages.

(5) Inspect hand priming pump barrel (3, Figure 2-13) and handle assembly (2) for wear, breaks, and damage.

(6) Inspect mounting bracket (5) for cracks, breaks, and deformation.

d. Repair

(1) Replace cracked, broken, deformed, or damaged housing (9 or 48, Figure 2-183), bowl (26 or 40), or base (34 or 41).

(2) Replace fuel/water separator parts with scratched, nicked, gouged, or damaged gasket surfaces that cannot be used without the chance of leaks developing.

(3) Repair damaged threads according to TM 2350-45.

(4) Replace hand priming pump if worn, broken, or damaged.

(5) Repair mounting bracket (5, figure 2-13), if cracked or broken by welding. Refer to TM 9-237 for welding applications. Replace mounting bracket (5) if damaged beyond repair.

(6) Straighten mounting bracket (5), if bent or deformed using accepted sheet metal practices. Replace mounting bracket (5) if damaged beyond repair.

e. Assembly

(1) Fuel/Water Separator

NOTE

Coat threads of all fuel fittings and connections with pipe sealant NSN 8030-01-054-0754 or equivalent.

Perform steps (e.1 through e.8) only for A1 series vehicles.

(a) Install baffle (36, Figure 2-183), turbine (37), check ball (38), and new check ball gasket (39).

(b) Install heater disc (35) by passing two wires (29 and 30) through base (34), and baffle (19).

(c) Coat new gasket (33) with clean diesel fuel. Install gasket (33) into base (34).

(d) Connect two wires (29 and 30) to terminals (31 and 32) on inside of bowl (26).

(e) Install bowl (26) using retainer (28) and four screws (27). Torque screws (27) to 40 inch-pounds (4.51 N·m).

(e.1) Coat threads of return tube (51) with adhesive. Install return tube (51) in base (34). Torque return tube (51) to 180-200 inch-pounds (20.34-22.57 N·m).

(e.2) Lubricate new gasket (50) with diesel fuel and install in base (41).

NOTE

Aline matchmarks made prior to removal.

(e.3) Install housing (48) in base (41).

(e.4) Install heater disc (47) in housing (48).

(e.5) Install wire (49) in base (41).

NOTE

Install check ball gasket (46) so side marked TOP is against base (41).

(e.6) Coat new check ball gasket (46) with clean diesel fuel. Install check ball gasket (46) and baffle (45) on base (41).

(e.7) Install check ball (44) and turbine (43) on base (41). Torque turbine (43) 20-25 inch-pounds (2.26-2.85 N·m).

(e.8) Install bowl (40) using bowl retainer (28) and four capscrews (27). Torque capscrews (27) to 55-65 inch-pounds (6.25-7.35 N·m).

(f) Install drain valve assembly (23). Torque drain valve assembly (23) to 30-35 inch-pounds (3.39-3.96 N·m).

(g) Install filter element (22) into housing (9 or 48).

(h) Coat new gasket (21) with clean diesel fuel. Install gasket (21) and lid (20) onto housing (9 or 48)

(i) Coat new O-ring (19) with clean diesel fuel. Install O-ring (19) onto tee handle (18).

(j) Install tee handle (18). Tighten securely.

(k.) Deleted.

(l.) Deleted.

(m) Install two clamps (17) on housing (9).

NOTE

Perform step (m.1) on LVSA1 series vehicles only.

(m.1) Install two clamps (17.4) using two capscrews (17.3), washers (17.2), and new locknuts (17.1) on housing (48). Tighten locknuts (17.1) securely.

(n) Install adapter (16) in housing (9 or 48).

(o) Install hex nipple (15) in adapter (16).

(p) Install cross fitting (12) on hex nipple (15).

(q) Install adapter (14) in cross fitting (12).

(r) Deleted.

(s) Install elbows (10 and 11) in the end and top of cross fitting (12) respectively.

(t) Install adapter (8) in housing (9 or 48). Tighten adapter (8) securely.

(u) Deleted.

(v) Install street tee (3) on adapter (8). Tighten adapter (8) securely.

(w) Install hex nipple (5) in bottom of street tee (3). Tighten hex nipple (5) securely.

(x) Deleted.

(y) Install pressure switch (4) on hex nipple (5). Tighten pressure switch (4) and hex nipple (5) securely.

(z) Install elbows (1 and 2) in street tee (3) and pressure switch (4) respectively. Tighten elbows (1 and 2) securely.

(2) Secondary Fuel Filter and Adapter. No assembly required.

(3) Hand Priming Pump and Mounting Bracket. No assembly required.

2-165. SPARE TIRE AND WHEEL ASSEMBLY AND LIFTING BRACKET

a. Disassembly

(1) Spare Tire and Wheel Assembly. Refer to TM 2320-20/12 for disassembly of spare tire and wheel assembly (non run flat and run flat).

(2) Lifting Bracket. No disassembly required

b. Cleaning. Refer to Section III.

WARNING

To prevent personal injury when steam cleaning, personnel shall wear proper protective equipment conforming to OSHA Standards.

Adequate ventilation shall be provided while using solvents and cleaners. Prolonged breathing of vapors should be avoided. Do not use near heat or open flame. Avoid prolonged contact with skin. Use of rubber gloves conforming to FED SPEC ZZ-G-381, face shield conforming to L-F-36, and other protective equipment is required according to OSHA Standards.

To prevent serious personal injury when abrasive blasting with high air pressure (120-150 psi), in open areas or confined areas, personnel shall wear full-body protective equipment conforming to OSHA Standards.

(1) Steam clean lifting bracket to remove dirt and grease.

(2) Abrasive blast lifting bracket to remove paint, rust, and corrosion.

(3) Paint lifting bracket according to TM 4750-15/1.

c. Inspection. Check lifting bracket for cracks, breaks, and deformation.

d. Repair

(1) Straighten bent or deformed lifting bracket using accepted sheet metal practices.

(2) Repair cracks or breaks by welding. Refer to TM 9-237 for welding applications.

(3) Replace lifting bracket damaged beyond repair.

e. Assembly

(1) Spare Tire and Wheel Assembly. Refer to TM 2320-20/12 for assembly of spare tire and wheel assembly (non run flat and run flat).

(2) Lifting Bracket. No assembly required.

2-166. SPARE TIRE HOIST WINCH

a. Disassembly

(1) Remove three nuts (4, Figure 2-184), lockwashers (3), washers (2), and capscrews (1) from upper column (6) and spare tire hoist winch (5). Discard lockwashers (3).

(2) Remove spare tire hoist winch (5) from upper column (6).

(3) Remove two retaining pins (7) from clevis pins (8).

(4) Pull two clevis pins (8) out of upper column (6).

(5) Pull three sections of column assembly (9) apart and remove them from vehicle.

(6) Remove retaining pin (10), washer (11), and clevis pin (12) from column assembly (9).

(7) Remove nut (13), spacer (14), pulley (15), three washers (16), and capscrew (17) from column assembly (9).

b. Cleaning. Refer to Section III.

WARNING

To prevent personal injury when steam cleaning, personnel shall wear proper protective equipment conforming to OSHA Standards.

Adequate ventilation shall be provided while using solvents and cleaners. Prolonged breathing of vapors should be avoided. Do not use near heat or open flame. Avoid prolonged contact with skin. Use of rubber gloves conforming to FED SPEC ZZ-G-381, face shield conforming to L-F-36, and other protective equipment is required according to OSHA Standards.

To prevent serious personal injury when abrasive blasting with high air pressure (120-150 psi), in open areas or confined areas, personnel shall wear full-body protective equipment conforming to OSHA Standards.

(1) Steam clean spare tire hoist winch parts to remove dirt and grease.

(2) Abrasive blast spare tire hoist winch parts to remove paint, rust, and corrosion.

(3) Paint spare tire hoist winch parts according to TM 4750-15/1.

c. Inspection

(1) Inspect column assembly (9) for bends, cracks, and deformation.

(2) Inspect pulley (15) for wear, cracks, and deformation.

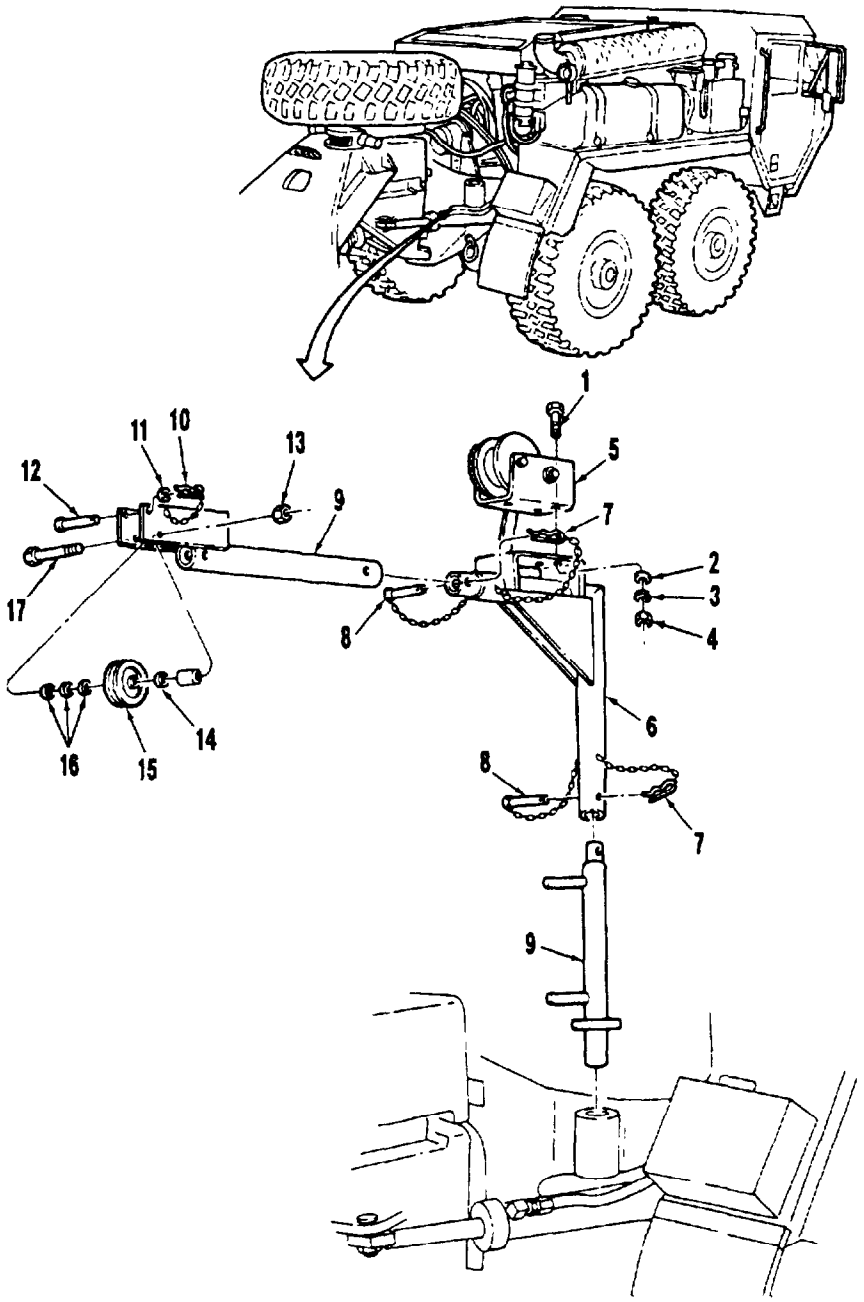

1. Capscrew (3)
2. Washer (3)
3. Lockwasher (3)
4. Nut (3)
5. Spare Tire Hoist Winch
6. Upper Column
7. Retaining Pin (2)
8. Clevis Pin (2)
9. Column Assembly
10. Retaining Pin
11. Washer
12. Clevis Pin
13. Nut
14. Spacer
15. Pulley
16. Washer (3)
17. Capscrew

Figure 2-184. Spare Tire Hoist Winch Disassembly/Assembly

(3) Inspect spare tire hoist winch for operation, binding, gear-tooth wear, and cracks.

(4) Inspect pins and retaining pins and chains for serviceability and completeness.

(5) Inspect capscrews and nuts for crossed, smashed, or burred threads.

d. Repair

(1) Repair cracks or breaks in column assembly by welding. Refer to TM 9-237 for welding applications.

(2) Straighten bent or deformed components using accepted sheet metal practices.

(3) Replace pulley or spare tire hoist winch if worn, cracked, or deformed.

e. Assembly

(1) Install pulley (15), spacer (14), three washers (16), capscrew (17), and nut (13) in column assembly (9). Tighten nut (13) securely.

(2) Install clevis pin (12), washer (11), and retaining pin (10) in column assembly (9).

(3) Install three sections of column assembly (9) on vehicle.

(4) Install two clevis pins (8) in upper column (6).

(5) Install two retaining pins (7) in clevis pins (8).

(6) Install spare tire hoist winch (5) on upper column (6).

(7) Install three capscrews (1), washers (2), new lockwashers (3), and nuts (4) in spare tire hoist winch (5) and upper column (6). Tighten nuts (4) securely.

2-167. SPARE TIRE HOIST WINCH CABLE

a. Disassembly. No disassembly required.

b. Cleaning. Refer to Section III. Remove excessive corrosion with a wire brush or an oily rag.

c. Inspection

(1) Inspect spare tire hoist winch cable (1, Figure 2-16) for cracks, frays, and breaks.

(2) Inspect spare tire hoist winch cable (1) for kinks, bends, and separations.

d. Repair. Replace spare tire hoist winch cable (1) failing inspection.

e. Assembly. No assembly required.

2-168. AIR LINES AND FITTINGS

a. Air Lines

(1) Disassembly. No disassembly required.

WARNING

Dry cleaning solvents are flammable. Do not clean parts near an open flame or in a smoking area. Contact with skin may cause irritation or cracking. Use of rubber gloves conforming to FED SPEC ZZ-G-381, face shield conforming to L-F-36, and other protective equipment is required according to OSHA Standards.

Adequate ventilation shall be provided while using solvents and cleaners. Prolonged breathing of vapors should be avoided. Do not use near heat or open flame. Avoid prolonged contact with skin. Use of rubber gloves conforming to FED SPEC ZZ-G-381, face shield conforming to L-F-36, and other protective equipment is required according to OSHA Standards.

When cleaning with compressed air, regulate to 25 psi maximum. eyeshields must be worn to prevent injury to the eyes or complete loss of sight.

(2) Cleaning. Refer to Section III. Degrease metal air lines in a vapor degreaser conforming to MIL-D-45950 to remove dirt and grease. Use 1,1,1-Trichloroethane, Tech, FED SPEC O-T-620, Type I, NSN 6810-00-551-1487 as the solvent. Blow out all air lines with compressed air (25 psi maximum) to remove excess Trichloroethane and to remove any dirt or blockage.

(3) Inspection

(a) Inspect metal and nonmetallic air lines for kinks, holes, and damage.

(b) Inspect lines for blockage.

(4) Repair. Replace air lines failing inspection.

(5) Assembly. No assembly required.

b. Fittings (Compression and Reusable)

(1) Disassembly. No disassembly required.

(2) Cleaning. Refer to Section III. Degrease fittings in a vapor degreaser conforming to MIL-D-45950 to remove dirt and grease. Use 1,1,1-Trichloroethane, Tech, FED SPEC O-T-620, Type I, NSN 6810-00-551-1487 as the solvent. Blow out fittings with compressed air (25 psi) to remove excess Trichloroethane and to remove any dirt or blockage.

(3) Inspection

(a) Inspect wrench pad area of fitting for serviceability.

(b) Inspect threaded areas of fitting for nicks, gouges, crossed threads and damage.

(c) Inspect fittings for blockage.

(4) Repair. Replace fittings failing inspection.

(5) Assembly. No assembly required.

2-169. SPRING BRAKE VALVE

a. Disassembly. No disassembly required.

b. Cleaning. Refer to Section III.

WARNING

Dry cleaning solvents are flammable. Do not clean parts near an open flame or in a smoking area. Contact with skin may cause irritation or cracking. Use of rubber gloves conforming to FED SPEC ZZ-G-381, face shield conforming to L-F-36, and other protective equipment is required according to OSHA Standards.

Adequate ventilation shall be provided while using solvents and cleaners. Prolonged breathing of vapors should be avoided. Do not use near heat or open flame. Avoid prolonged contact with skin. Use of rubber gloves conforming to FED SPEC ZZ-G-381, face shield conforming to L-F-36, and other protective equipment is required according to OSHA Standards.

When cleaning with compressed air, regulate to 25 psi maximum. eyeshields must be worn to prevent injury to the eyes or complete loss of sight.

CAUTION

To prevent damage to spring brake valve (6, Figure 2-20), seal all holes to keep solvent from entering the spring brake valve (6). Clean externally only.

(1) Remove loose dirt with cloth or small brush.

(2) Solvent clean spring brake valve (6, Figure 2-20) using Dry Cleaning Solvent, FED SPEC P-D-680 to remove dirt and grease. Rinse thoroughly and blow off excess solvent with compressed air 25 psi maximum. Allow to air dry.

c. Inspection

(1) Inspect spring brake valve (6) for cracked, broken, or deformed housing.

(2) Inspect spring brake valve (6) for crossed, smashed, burred, or damaged threads.

d. Repair

CAUTION

When repairing damaged threads, take necessary care to ensure metal shavings do not get inside spring brake valve. Damage or malfunction of the spring brake valve could result.

(1) Repair damaged threads according to TM 2350-45.

(2) Replace cracked, broken, or deformed spring brake valve (6).

e. Assembly. No assembly required.

2-170. QUICK RELEASE VALVE

a. Disassembly. No disassembly required

b. Cleaning. Refer to Section III.

WARNING

Dry cleaning solvents are flammable. Do not clean parts near an open flame or in a smoking area. Contact with skin may cause irritation or cracking. Use of rubber gloves conforming to FED SPEC ZZ-G-381, face shield conforming to L-F-36, and other protective equipment is required according to OSHA Standards.

Adequate ventilation shall be provided while using solvents and cleaners. Prolonged breathing of vapors should be avoided. Do not use near heat or open flame. Avoid prolonged contact with skin. Use of rubber gloves conforming to FED SPEC ZZ-G-381, face shield conforming to L-F-36, and other protective equipment is required according to OSHA Standards.

When cleaning with compressed air, regulate to 25 psi maximum. eyeshields must be worn to prevent injury to the eyes or complete loss of sight.

CAUTION

To prevent damage to quick release valve (2, Figure 2-21), seal inlet and outlet holes to keep solvent from entering the quick release valve. Clean externally only.

(1) Remove loose dirt with cloth or small brush.

(2) Solvent clean quick release valve (2) using Dry Cleaning Solvent, FED SPEC P-D-680 to remove dirt and grease. Rinse thoroughly and blow off excess solvent with compressed air 25 psi maximum. Allow to air dry.

c. Inspection

(1) Inspect quick release valve (2) for cracked, broken, or deformed housing.

(2) Inspect quick release valve (2) for crossed, smashed, burred, or damaged threads.

d. Repair

CAUTION

When repairing damaged threads, take necessary car to ensure metal shavings do not get inside quick release valve. Damage or malfunction of the quick release valve could result.

(1) Repair damaged threads according to TM 2350-45.

(2) Replace cracked, broken, or deformed quick release valve (2).

e. Assembly. No assembly required.

2-170.1. QUICK RELEASE VALVE (LVSA1 SERIES VEHICLES ONLY)

a. Disassembly. No disassembly required.

b. Cleaning. Refer to section III.

WARNING

Dry cleaning solvents are flammable. Do not clean parts near an open flame or in a smoking area. Contact with skin may cause irritation or cracking. Use of rubber gloves conforming to FED SPEC ZZ-G-381, face shield conforming to L-F-36, and other protective equipment is required according to OSHA Standards.

Adequate ventilation shall be provided while using solvents and cleaners. Prolonged breathing of vapors should be avoided. Do not use near heat or open flame. Avoid prolonged contact with skin. Use of rubber gloves conforming to FED SPEC ZZ-G-381, face shield conforming to L-F-36, and other protective equipment is required according to OSHA Standards.

When cleaning with compressed air, regulate to 25 psi maximum. Eyeshields must be worn to prevent injury to the eyes or complete loss of sight.

CAUTION

To prevent damage to right and left quick release valves (3 and 4, Figure 2-21.1), seal inlet and outlet holes to keep solvent from entering the quick release valve. Clean externally only.

(1) Remove loose dirt with cloth or small brush.

(2) Solvent clean left and right quick release valves (3 and 4) using Dry Cleaning Solvent, FED SPEC P-D-680 to remove dirt and grease. Rinse thoroughly and blow off excess solvent with compressed air 25 psi maximum. Allow to air dry.

c. Inspection

(1) Inspect right and left quick release valves (3 and 4) for cracked, broken, or deformed housing.

(2) Inspect right and left quick release valves (3 and 4) for crossed, smashed, burred, or damaged threads.

d. Repair

CAUTION

When repairing damaged threads, take necessary care to ensure metal shavings do not get inside quick release valve. Damage or malfunction of the quick release valve could result.

(1) Repair damaged threads according to TM 2250-45.

(2) Replace cracked, broken, or deformed left and right quick release valves (3 and 4).

e. Assembly. No assembly required.

2-271. ENGINE COVER, RADIATOR GRATE, AND RADIATOR GRILL

a. Disassembly. No assembly required.

b. Cleaning. Refer to Section III.

WARNING

To prevent personal injury when steam cleaning, personnel shall wear proper protective equipment conforming to OSHA Standards.

Adequate ventilation shall be provided while using solvents and cleaners. Prolonged breathing of vapors should be avoided. do not use near heat or open flame. Avoid prolonged contact with skin. Use of rubber gloves conforming to FED SPEC ZZ-G-381, face shield conforming to L-F-36, and other protective equipment is required according to OSHA standards.

To prevent serious personal injury when abrasive blasting with high air pressure (120-150 psi), in open areas or confined areas, personnel shall wear full-body protective equipment conforming to OSHA standards.

(1) Steam clean engine cover (3, Figure 2-22), radiator grate (1, Figure 2-23), and radiator grill (4, Figure 2-24) to remove dirt and grease.

(2) Abrasive blast engine cover (3, Figure 2-22), radiator grate (1, Figure 2-23), and radiator grill (4, Figure 2-24) to remove paint, rust, and corrosion.

(3) Paint engine cover (3, Figure 2-22), radiator grate (1, Figure 2-23), and radiator grill (4, Figure 2-24) according to TM 4750-15/1.

c. Inspection

(1) Inspect engine cover (3, Figure 2-22), radiator grate (1, Figure 2-23), and radiator grill (4, Figure 2-24) for dents, bends, cracks, and breaks.

(2) Inspect radiator grate (1, Figure 2-23) mesh for holes, tears, and deformed areas that would allow objects to get through to the radiator cooling fins and possibly reduce cooling efficiency.

d. Repair

(1) Repair breaks or cracks by welding. Refer to TM 9-237 for welding applications.

(2) Repair dents or bends using accepted sheet metal practices.

(3) Replace radiator grate (1) with holes, tears, or deformed areas in mesh.

e. Assembly. No assembly required.

2-172. HYDRAULIC HOSES AND FITTINGS

a. Hoses

(1) Disassembly. No disassembly required.

(2) Cleaning. Refer to Section III.

WARNING

To prevent personal injury when steam cleaning, personnel shall wear proper protective equipment conforming to OSHA Standards.

Adequate ventilation shall be provided while using solvents and cleaners. Prolonged breathing of vapors should be avoided. Do not use near heat or open flame. Avoid prolonged contact with skin. Use of rubber gloves conforming to FED SPEC ZZ-G-381, face shield conforming to L-F-36, and other protective equipment is required according to OSHA Standards.

When cleaning with compressed air, regulate to 25 psi maximum. Eyeshields must be worn to prevent injury to the eyes or complete loss of sight.

(a) Steam clean hydraulic hoses to remove dirt and grease.

(b) Blow out hydraulic hose passages using compressed air 25 psi maximum.

(3) Inspection

(a) Inspect hydraulic hoses for cracks, breaks, frays, and damage.

(b) Inspect inside of hydraulic hose for dirt, clogs, and defects.

(4) Repair. Replace defective hydraulic hoses.

(5) Assembly. No assembly required.

b. Fittings

(1) Disassembly. No disassembly required.

(2) Cleaning. Refer to Section III.

WARNING

Avoid contact with alkaline paint and rust removers, phosphate coating compounds, 1,1,1-Trichloroethane, and Dry Cleaning Solvent P-D-680. If solution comes in contact with skin, wash thoroughly with running water. Use of rubber gloves conforming to FED SPEC ZZ-G-381, face shield conforming to L-F-36, and other protective equipment is required according to OSHA Standards.

Adequate ventilation shall be provided while using solvents and cleaners. Prolonged breathing of vapors should be avoided. Do not use near heat or open flame. Avoid prolonged contact with skin. Use of rubber gloves conforming to FED SPEC ZZ-G-381, face shield conforming to L-F-36, and other protective equipment is required according to OSHA Standards.

When cleaning with compressed air, regulate to 25 psi maximum. Eyeshields must be worn to prevent injury to the eyes or complete loss of sight.

(a) Degrease hydraulic fittings in a vapor degreaser conforming to MIL-D-45950 to remove dirt and grease. Use 1,1,1-Trichloroethane, Tech, FED SPEC O-T-620, Type I, NSN 6850-00-551-1487 as the solvent.

(b) Alkaline clean hydraulic fittings to remove paint, rust, and corrosion.

(c) Blow out hydraulic fittings, using compressed air 25 psi maximum, to remove any dirt or blockage in fitting passage.

(3) Inspection

(a) Inspect hydraulic fittings for cracks, pinholes, and damage.

(b) Inspect threads on hydraulic fittings for smashed or crossed threads, burs, and deformation.

(c) Inspect wrench pad on hydraulic fittings for serviceability.

(4) Repair. Replace hydraulic fittings failing inspection.

(5) Assembly. No assembly required.

2-173. HYDRAULIC OIL COOLER

a. Disassembly. Disassemble hydraulic oil cooler only to the extent necessary for cleaning, inspection, and repair.

b. Cleaning. Refer to Section III.

WARNING

To prevent personal injury when steam cleaning, personnel shall wear proper protective equipment conforming to OSHA Standards.

To prevent personal injury from chemical solutions when working with hot cleaning vat, wear appropriate safety equipment as governed by OSHA Standards.

If hot cleaning vat solution, muriatic acid, or flux enters the eyes, wash thoroughly for 15 minutes with clean water and seek medical attention as soon as possible.

Flux, caustic solutions, and cleaning acids can cause skin irritation. Wash immediately with soap and clean water if the skin comes in contact with any of these chemicals.

Adding large amounts of cleaning compound to a hot cleaning vat will cause violent boiling; add small amounts slowly. Never add water to the dry compound; add the compound to the water.

Avoid contact with 1,1,1-Trichloroethane, Dry Cleaning Solvent P-D-680, epoxy paint stripper, alkaline rust and paint remover, and phosphoric acid corrosion remover. If solution comes in contact with the skin, wash thoroughly with running water. Use of rubber gloves conforming to FED SPEC ZZ-G-381, face shield conforming to L-F-36, and other protective equipment is required according to OSHA Standards.

Effluent from chemical cleaning and coating operations is toxic and hazardous. Such operations shall comply with all applicable state and federal environmental regulations including Title 40, Code of Federal Regulations, Protection of the Environment.

NOTE

Packed sediment not removed by flushing must be boiled out by submerging hydraulic oil cooler in a tank of a boiling solution of Compound, Corrosion Removing, NSN 6850-00-935-5853 or equivalent.

Mix the Corrosion Removing Compound according to manufacturer's instructions. The length of time required to clean a hydraulic oil cooler will be governed by the condition of the hydraulic oil cooler and the degree of plugging.

(1) Steam clean hydraulic oil cooler cooling fins to remove insects, dirt, and other foreign material.

(2) Alkaline clean hydraulic oil cooler to remove rust, scale, grease, sludge, and paint.

(3) Thoroughly wash hydraulic oil cooler externally and flush internally immediately after removal from the alkaline cleaning vat.

(4) Paint hydraulic oil cooler according to TM 4750-15/1.

c. Inspection

(1) Inspect cooling fins to see that they are parallel and that tubes are not bent or broken.

(2) Inspect all soldered seams and attachment of inlet and outlet fitting weldments for leaks.

(3) Inspect for leaks as follows:

NOTE

Ensure hydraulic oil cooler is completely dry inside before performing leak test.

(a) Close one opening leaving the other open to affix an air hose to perform leakage test.

(b) Submerge hydraulic oil cooler in a water tank large enough to accommodate the hydraulic oil cooler and apply air pressure. Apply 125 psi (maximum) to hydraulic oil cooler. Inspect for leaks in the form of air bubbles.

d. Repair

(1) Repair all leaks, including tubes and connections, by silver brazing (soldering) according to TM 9-237.

NOTE

In effecting repairs, fin areas removed or repaired will be held to less than 5 percent. Remaining fins will be parallel.

In effecting repairs, the number of tubes removed or repaired will be held to less than 5 percent.

(a) Leak(s) in flat surfaces of tanks are repaired by sweating sheet metal over source of leak(s).

(b) Core tubes that require blocking shall be blocked according to TM 750-254.

(c) Straighten and repair bent tubes and fins. External surfaces and fins shall not show damage that would affect the serviceability of the unit.

(d) Remove damaged fins that are beyond repair.

(2) Drain cocks must not leak and must be capable of opening and closing by hand without the use of tools.

(3) After repairs are made, re-test hydraulic oil cooler as cited in c(3)(a and b).

e. Assembly. No assembly required.

2-174. TRANSMISSION OIL COOLER

a. Disassembly. Disassemble transmission oil cooler only to the extent necessary for cleaning, inspection, and repair.

b. Cleaning. Refer to Section III.

WARNING

To prevent personal injury when steam cleaning, personnel shall wear proper protective equipment conforming to OSHA Standards.

To prevent personal injury from chemical solutions when working with hot cleaning vat, wear appropriate safety equipment as governed by OSHA Standards.

If hot cleaning vat solution, muriatic acid, or flux enters the eyes, wash thoroughly for 15 minutes with clean water and seek medical attention as soon as possible.

Flux, caustic solutions, and cleaning acids can cause skin irritation. Wash immediately with soap and clean water if the skin comes in contact with any of these chemicals.

Adding large amounts of cleaning compound to a hot cleaning vat will cause violent boiling; add small amounts slowly. Never add water to the dry compound; add the compound to the water.

Avoid contact with 1,1,1-Trichloroethane, Dry Cleaning Solvent P-D-680, epoxy paint stripper, alkaline rust and paint remover, and phosphoric acid corrosion remover. If solution comes in contact with the skin, wash thoroughly with running water. Use of rubber gloves conforming to FED SPEC ZZ-G-381, face shield conforming to L-F-36, and other protective equipment is required according to OSHA Standards.

Effluent from chemical cleaning and coating operations is toxic and hazardous. Such operations shall comply with all applicable state and federal environmental regulations including Title 40, Code of Federal Regulations, Protection of the Environment.

NOTE

Packed sediment not removed by flushing must be boiled out by submerging transmission oil cooler in a tank of a boiling solution of Compound, Corrosion Removing, NSN 6850-00-935-5853 or equivalent.

NOTE

Mix the Corrosion Removing Compound according to manufacturer's instructions. The length of time required to clean a transmission oil cooler will be governed by the condition of the transmission oil cooler and the degree of plugging.

(1) Steam clean transmission oil cooler cooling fins to remove insects, dirt, and other foreign material.

(2) Alkaline clean transmission oil cooler to remove rust, scale, grease, sludge, and paint.

(3) Thoroughly wash transmission oil cooler externally and flush internally immediately after removal from the alkaline cleaning vat.

(4) Paint the transmission oil cooler according to TM 4750-15/1.

c. Inspection

(1) Inspect cooling fins to see that they are parallel and that tubes are not bent or broken.

(2) Inspect all soldered seams and attachment of inlet and outlet fitting weldments for leaks.

(3) Inspect for leaks as follows:

NOTE

Ensure transmission oil cooler is completely dry inside before performing leak test.

(a) Close one opening leaving the other open to affix an air hose to perform leakage test.

(b) Submerge transmission oil cooler in a water tank large enough to accommodate the transmission oil cooler and apply air pressure. Apply 125 psi (maximum) to transmission oil cooler. Inspect for leaks in the form of air bubbles.

d. Repair

(1) Repair all leaks, including tubes and connections, by silver brazing (soldering) according to TM 9-237.

NOTE

In effecting repairs, fin areas removed or repaired will be held to less than 5 percent. Remaining fins will be parallel.

In effecting repairs, the number of tubes removed or repaired will be held to less than 5 percent.

(a) Leak(s) in flat surfaces of tanks are repaired by sweating sheet metal over source of leak(s).

(b) Core tubes that require blocking shall be blocked according to TM 750-254.

(c) Straighten and repair bent tubes and fins. External surfaces and fins shall not show damage that would affect the serviceability of the unit.

(d) Remove damaged fins that are beyond repair.

(2) Drain cocks must not leak and must be capable of opening and closing by hand without the use of tools.

(3) After repairs are made, re-test transmission oil cooler as cited in c(3)(a and b).

e. Assembly. No assembly required.

2-175. COOLING SYSTEM HOSES AND TUBES

a. Disassembly. No disassembly required

b. Cleaning. Refer to Section III.

WARNING

To prevent personal injury when steam cleaning, personnel shall wear proper protective equipment conforming to OSHA Standards.

Adequate ventilation shall be provided while using solvents and cleaners. Prolonged breathing of vapors should be avoided. Do not use near heat or open flame. Avoid prolonged contact with skin. Use of rubber gloves conforming to FED SPEC ZZ-G-381, face shield conforming to L-F-36, and other protective equipment is required according to OSHA Standards.

When cleaning with compressed air, regulate to 25 psi maximum. Eyeshields must be worn to prevent injury to the eyes or complete loss of sight.

(1) Steam clean inside and outside of cooling system tubes to remove dirt and grease.

(2) Blow off excess water using compressed air 25 psi maximum.

c. Inspection

(1) Inspect cooling system tubes for bends, breaks, cracks, and deformation.

(2) Inspect for holes and rust-through conditions.

d. Repair. Replace cooling system tubes failing inspection.

e. Assembly. No assembly required.

2-176. RADIATOR AND FAN SHROUD

a. Disassembly

WARNING

The radiator is very heavy and awkward to handle. To prevent personal injury, use an overhead lifting device or help from assistant(s) to handle radiator during disassembly.

CAUTION

Be extremely careful not to damage cooling fins when handling radiator during disassembly.

(1) Radiator

(a) Support radiator (1, Figure 2-185) on bench in a way that will not damage core (2).

(b) Remove ten capscrews (3), lockwashers (4), and two end bars (5). Discard lockwashers (4).

(c) Remove 50 nuts (8), lockwashers (7), capscrews (6), and two end bars (9) from core (2) and outlet tank (10). Discard lockwashers (7).

(d) Remove outlet tank (10) and four gaskets (11 and 12) from core (2). Discard gaskets (11 and 12).

(e) Remove ten capscrews (13), lockwashers (14), and two end bars (15) from inlet tank (16). Discard lockwashers (14).

(f) Remove 50 nuts (19), lockwashers (18), capscrews (17), and two end bars (20) from core (2) and inlet tank (16). Discard lockwashers (18).

(g) Remove left and right sides (21 and 22) from core (2).

(h) Remove inlet tank (16) and four gaskets (23 and 24) from core (2). Discard gaskets (23 and 24).

(i) Remove two neoprene sponges (25) from left and right sides (21 and 22).

(2) Fan Shroud. No disassembly required.

(b) Cleaning. Refer to Section III.

WARNING

To prevent personal injury when steam cleaning, personnel shall wear proper protective equipment conforming to OSHA Standards.

To prevent personal injury from chemical solutions when working with hot cleaning vat, wear appropriate safety equipment as governed by OSHA Standards.

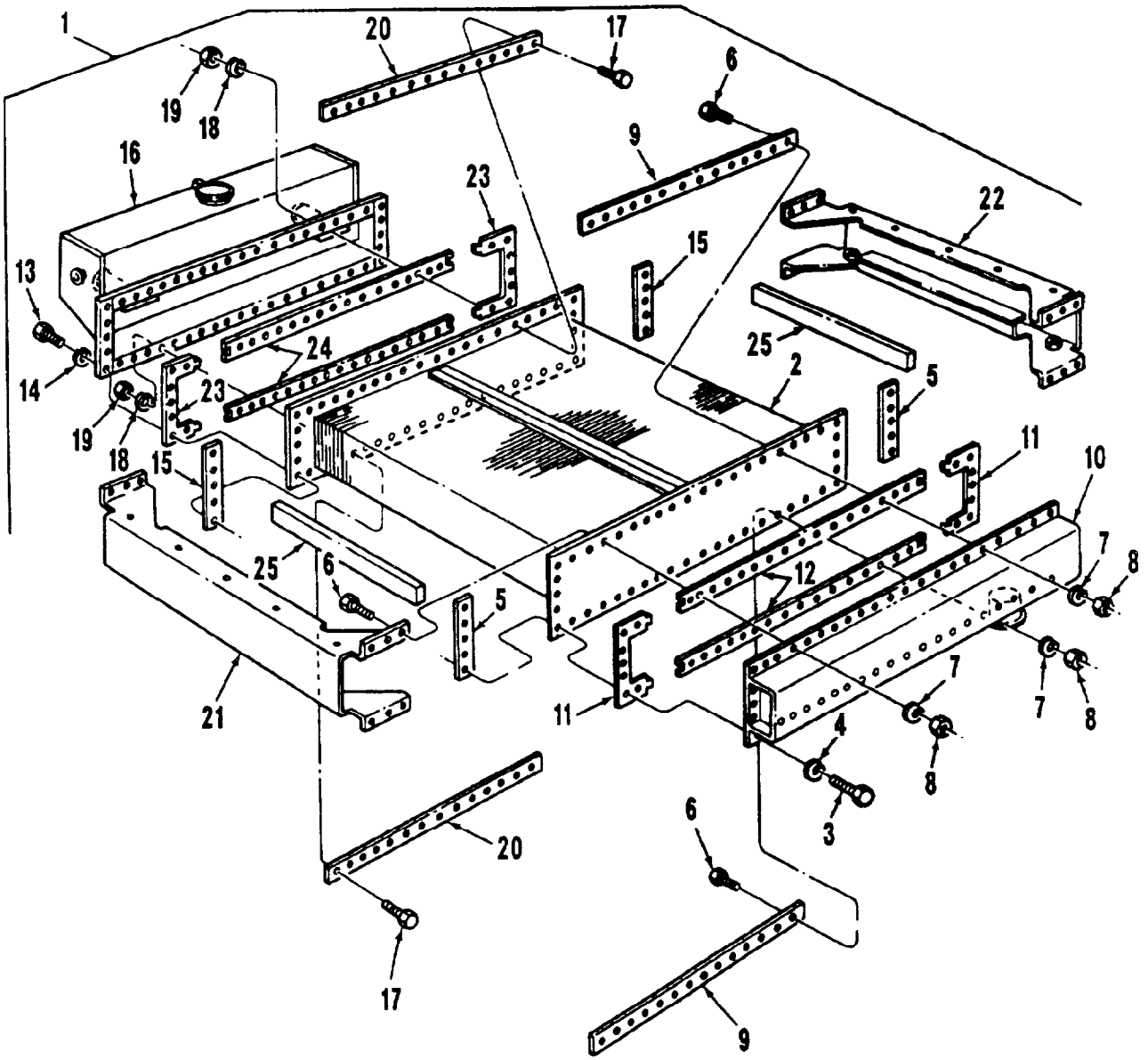

1. Radiator
2. Core
3. Capscrew (10)
4. Lockwasher (10)
5. End Bar (2)
6. Capscrew (50)
7. Lockwasher (50)
8. Nut (50)
9. End Bar (2)
10. Outlet Tank
11. Gasket (2)
12. Gasket (2)
13. Capscrew (10)
14. Lockwasher (10)
15. End Bar (2)
16. Inlet Tank
17. Capscrew (50)
18. Lockwasher (50)
19. Nut (50)
20. End Bar (2)
21. Left Side
22. Right Side
23. Gasket (2)
24. Gasket (2)
25. Neoprene Sponge (2)

Figure 2-185. Radiator Disassembly/Assembly

WARNING

To prevent personal injury when steam cleaning, personnel shall wear proper protective equipment conforming to OSHA Standards.

If hot cleaning vat solution, muriatic acid, or flux enters the eyes, wash thoroughly for 15 minutes with clean water and seek medical attention as soon as possible.

Flux, caustic solutions, and cleaning acids can cause skin irritation. Wash immediately with soap and clean water if the skin comes in contact with any of these chemicals.

Adding large amounts of cleaning compound to a hot cleaning vat will cause violent boiling; add small amounts slowly. Never add water to the dry compound; add the compound to the water.

Avoid contact with 1,1,1-Trichloroethane, Dry Cleaning Solvent P-D-680, epoxy paint stripper, alkaline rust and paint remover, and phosphoric acid corrosion remover. If solution comes in contact with the skin, wash thoroughly with running water. Use of rubber gloves conforming to FED SPEC ZZ-G-381, face shield conforming to L-F-36, and other protective equipment is required according to OSHA Standards.

Effluent from chemical cleaning and coating operations is toxic and hazardous. Such operations shall comply with all applicable state and federal environmental regulations including Title 40, Code of Federal Regulations, Protection of the Environment.

NOTE

Packed sediment not removed by flushing must be boiled out by submerging radiator core in a tank of a boiling solution of Compound, Corrosion Removing, NSN 6850-00-935-5853 or equivalent.

Mix the Corrosion Removing Compound according to manufacturer's instructions. The length of time required to clean a radiator core will be governed by the condition of the radiator and the degree of plugging.

(1) Steam clean radiator core cooling fins to remove insects, dirt, and other foreign material.

(2) Alkaline clean radiator core to remove rust, scale, grease, sludge, and paint.

(3) Thoroughly wash radiator core externally and flush internally immediately after removal from the alkaline cleaning vat.

(4) Abrasive blast fan shroud to remove paint, rust, and corrosion.

(5) Paint radiator and fan shroud according to TM 4750-15/1.

c. Inspection

(1) Inspect radiator core cooling fins to see that they are parallel and that tubes are not bent or broken.

(2) Inspect all soldered seams and attachment of inlet and outlet fitting weldments for leaks.

(3) Inspect for leaks as follows:

NOTE

Ensure radiator is completely dry inside before performing leak test.

Test radiator at pressure 3 psi above operating pressure. Operating pressure is 8 psi. Refer to TM 750-254.

(a) Close one opening leaving the other open to affix an air hose to perform leakage test.

(b) Submerge radiator core in a water tank large enough to accommodate the radiator core and apply air pressure. Apply no more than 11 psi (maximum) to radiator core. Inspect for leaks in the form of bubbles.

(4) Inspect radiator cap for cracks, breaks, corrosion, and damage. Test radiator cap per TM 2320-20/12, Paragraph 6-8.

d. Repair

(1) Repair all leaks by soldering according to DOD-STD-1866 and TM 750-254.

NOTE

In effecting repairs, fin areas removed or repaired will be held to less than 5 percent. Remaining fins will be parallel.

In effecting repairs, the number of tubes removed or repaired will be held to less than 5 percent.

(a) Leak(s) in flat surfaces of tanks are repaired by sweating sheet metal over source of leak(s). Refer to TM 750-254.

(b) Radiator core tubes that require blocking shall be blocked according to TM 750-254.

(c) Straighten and repair bent tubes and fins. External surfaces and fins shall not show damage that would affect the serviceability of the unit.

(d) Remove damaged fins that are beyond repair.

(2) Drain cocks shall not leak and shall be capable of being opened and closed by hand without the aid of tool(s).

(3) After repairs are made, re-test radiator as cited in c(3)(a and b).

(4) Repair or replace radiator cap as required.

e. Assembly

WARNING

The radiator is very heavy and awkward to handle. To prevent personal injury, use an overhead lifting device or help from assistant(s) to handle radiator during assembly.

(1) Radiator

(a) Install two neoprene sponges (25, Figure 2-185) in left and right sides (21 and 22).

(b) Install left and right sides (21 and 22) on core (2).

(c) Install four new gaskets (23 and 24) on core (2) so that tab on gasket (23) fits in slot on gasket (24).

(d) Install inlet tank (16) on core (2) using two end bars (20), 50 capscrews (17), new lockwashers (18), and nuts (19).

(e) Torque nuts (19) to 22 foot-pounds (ft-lb) (29.27 N.m).

(f) Install two end bars (15), ten new lockwashers (14), and capscrews (13), on core (2).

(g) Torque capscrews (13) to 22 ft-lb (29.27 N.m).

(h) Install four new gaskets (11 and 12) on core (2) so that tab on gasket (11) fits in slot on gasket (12).

(i) Install outlet tank (10) on core (2) using two end bars (9), 50 capscrews (6), new lockwashers (7), and nuts (8).

(j) Torque nuts (8) to 22 ft-lb (29.27 N.m).

(k) Install two end bars (5), ten new lockwashers (4), and capscrews (3) on core (2).

(l) Torque capscrews (3) to 22 ft-lb (29.27 N.m).

(2) Fan Shroud. No assembly required.

2-177. FUEL LINES, VENT LINES, CHECK VALVES, AND FITTINGS

a. Fuel Lines, Vent Lines, and Check Valves

(1) Disassembly. No disassembly required.

(2) Cleaning. Refer to Section III.

WARNING

To prevent personal injury when steam cleaning, personnel shall wear proper protective equipment conforming to OSHA Standards.

Adequate ventilation shall be provided while using solvents and cleaners. Prolonged breathing of vapors should be avoided. Do not use near heat or open flame. Avoid prolonged contact with skin. Use of rubber gloves conforming to FED SPEC ZZ-G-381, face shield conforming to L-F-36, and other protective equipment is required according to OSHA Standards.

When cleaning with compressed air, regulate to 25 psi maximum. Eyeshields must be worn to prevent injury to the eyes or complete loss of sight.

(a) Steam clean fuel line and vent line exteriors to remove dirt and grease.

(b) Steam clean fuel line and vent line interiors to remove dirt and fuel residue. Blow out excess water from fuel lines and vent lines using compressed air 25 psi maximum. Allow to dry thoroughly.

(3) Inspection

(a) Inspect fuel lines (1, Figure 2-33) and vent lines (4) for kinks, holes, rust, and damage.

(b) Inspect fuel lines (1) and vent lines (4) for blockage.

(4) Repair

NOTE

Perform steps (a.1) and (b.1) for LVSA1 series vehicles only.

(a) Clear fuel lines (1) and vent lines (4) of any blockage.

(a.1) Clear fuel lines (1), vent hose (4.1), and vent valve (4.2) of any blockage.

(b) Replace fuel lines (1) and vent lines (4) that are kinked, rusted, or damaged.

(b.1) Replace fuel lines (1), vent hose (4.1), and vent valve (4.2) that are kinked, rusted, or damaged.

(c) Replace check valves (3) as necessary.

(5) Assembly. No assembly required.

b. Fittings

(1) Disassembly. No disassembly required.

(2) Cleaning. Refer to Section III.

WARNING

Dry cleaning solvents are flammable. Do not clean parts near an open flame or in a smoking area. Contact with skin may cause irritation or cracking. Use of rubber gloves conforming to FED SPEC ZZ-G-381, face shield conforming to L-F-36, and and other protective equipment is required according to OSHA Standards.

Avoid contact with alkaline paint and rust removers, phosphate coating compounds, 1,1,1-Trichloroethane, and Dry Cleaning Solvent P-D-680. If solution comes in contact with the skin, wash thoroughly with running water. Use of rubber gloves conforming to FED SPEC ZZ-G-381, face shield conforming to L-F-36, and other protective equipment is required according to OSHA Standards.

Adequate ventilation shall be provided while using solvents and cleaners. Prolonged breathing of vapors should be avoided. Do not use near heat or open flame. Avoid prolonged contact with skin. Use of rubber gloves conforming to FED SPEC ZZ-G-381, face shield conforming to L-F-36, and other protective equipment is required according to OSHA Standards.

When cleaning with compressed air, regulate to 25 psi maximum. Eyeshields must be worn to prevent injury to the eyes or complete loss of sight.

(a) Degrease fittings (2, Figure 2-33) in a vapor degreaser conforming to MIL-D-45950 to remove dirt and grease. Use 1,1,1-Trichloroethane, Tech, FED SPEC O-T-620, Type I as the solvent.

(b) Blow out fittings (2) with compressed air, 25 psi maximum, to remove excess Trichloroethane and to remove any dirt or blockage.

(3) Inspection

(a) Inspect wrench pad area of fittings (2) for serviceability.

(b) Inspect threaded areas of fittings (2) for nicks, gouges, crossed threads, and damage.

(c) Inspect passages of fittings (2) for blockage.

(4) Repair

(a) Clear passages of any dirt or blockage.

(b) Replace fittings (2) failing inspection.

(5) Assembly. No assembly required.

2-178. FUEL TANKS

WARNING

Fuel tanks are heavy and awkward to handle. To prevent personal injury, use an overhead lifting device or help from assistant(s) to handle fuel tanks during disassembly and assembly.

a. Left Fuel Tank

(1) Disassembly

(a) Remove pipe plug (2, Figure 2-186) from top of left fuel tank (1).

(b) Remove five screws (3), cover (4), and gasket (5) from top of left fuel tank (1). Discard gasket (5).

(c) Remove left fuel tank cap (6), strainer (7), and retainer (8) from left fuel tank (1).

(d) Remove pipe plugs (9 and 10) from bottom and end of left fuel tank (1) respectively.

(2) Cleaning. Refer to Section III.

WARNING

Dry cleaning solvents are flammable. Do not clean parts near an open flame or in a smoking area. Contact with skin may cause irritation or cracking. Use of rubber gloves conforming to FED SPEC ZZ-G-381, face shield conforming to L-F-36, and other protective equipment is required according to OSHA Standards.

To prevent personal injury when steam cleaning, personnel shall wear proper protective equipment conforming to OSHA Standards.

Avoid contact with alkaline paint and rust removers, phosphate coating compounds, 1,1,1-Trichloroethane, and Dry Cleaning Solvent P-D-680. If solution comes in contact with skin, wash thoroughly with running water. Use of rubber gloves conforming to FED SPEC ZZ-G-381, face shield conforming to L-F-36, and other protective equipment is required according to OSHA Standards.

Adequate ventilation shall be provided while using solvents and cleaners. Prolonged breathing of vapors should be avoided. Do not use near heat or open flame. Avoid prolonged contact with skin. Use of rubber gloves conforming to FED SPEC ZZ-G-381, face shield conforming to L-F-36, and other protective equipment is required according to OSHA Standards.

(a) Hand clean cap and other small metal components using Dry Cleaning Solvent, FED SPEC P-D-680.

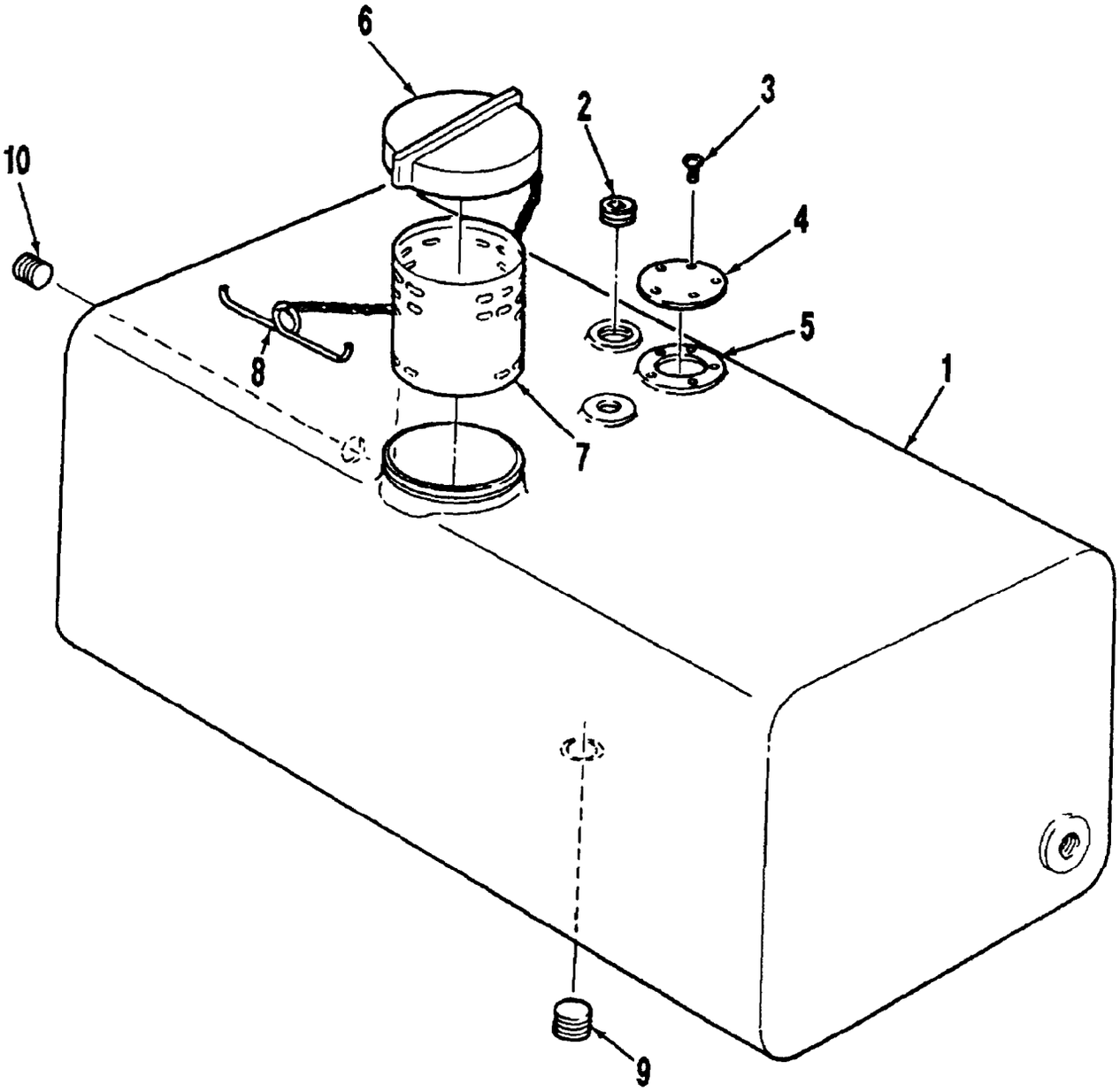

1. Left Fuel Tank
2. Pipe Plug
3. Screw (5)
4. Cover
5. Gasket
6. Left Fuel Tank Cap
7. Strainer
8. Retainer
9. Pipe Plug
10. Pipe Plug

Figure 2-186. Left Fuel Tank Disassembly/Assembly

(b) Steam clean left fuel tank thoroughly. This is necessary as a precaution against the explosion of fuel or fumes remaining in tank.

(c) Dip left fuel tank in a vat of alkaline rust remover conforming to MIL-C-46156 to remove paint, rust, and corrosion. Rinse left fuel tank in a vat of hot water.

(d) Coat interior of left fuel tank with Primer, Epoxy, MIL-P-4556 and paint left fuel tank according to TM 4750-15/1.

(3) Inspection

(a) Inspect filler cap, filler cap gasket, and screen for cracks, breaks, dry-rot, damage, deformation, and damaged threads.

(b) Inspect left fuel tank for cracks, dents, or leaking condition.

(c) Inspect threaded areas for crossed, smashed, burred, or damaged threads.

NOTE

Seal all openings except one, to allow air hose to be affixed, before pressure testing left fuel tank.

(d) Pressure test left fuel tank with compressed air, 6 psi maximum. Apply a solution of soap and water to all joints to inspect for leaks. No leakage is permitted.

(4) Repair

WARNING

Never use a torch on a fuel tank regardless of how long it has been empty unless the tank has been thoroughly cleaned with steam or rinsed thoroughly with 1,1,1-Trichloroethane, Tech, FED SPEC O-T-620.

(a) Repair minor leaks by soldering, brazing, or welding. Refer to TM 9-237 for welding applications.

(b) Repair dents using accepted sheet metal practices.

(c) Repair threaded areas according to TM 2350-45.

(d) Replace cracked, broken, damaged, or dry-rotted filler cap gasket, filler cap, or screen.

(e) Replace left fuel tank damaged beyond repair.

(5) Assembly

CAUTION

To prevent contamination of fuel, do not coat first two threads of any fitting with pipe sealant.

NOTE

Coat all fittings, elbows, adapters, and pipe plugs with Pipe Sealant, Loctite 592 or equivalent.

(a) Install pipe plugs (9 and 10, Figure 186) in bottom and end of left fuel tank (1) respectively. Tighten pipe plugs (9 and 10) securely.

(b) Install retainer (8), strainer (7), and left fuel tank cap (6) in left fuel tank (1).

(c) Instal new gasket (5), cover (4), and five screws (3), in top of left fuel tank (1). Tighten five screws (3) securely.

(d) Install pipe plug (2) in top of left fuel tank (1). Tighten pipe plugs (2) securely.

b. Right Fuel Tank

(1) Disassembly.

NOTE

Fuel tank lines and fittings for LVSA1 series vehicles have changed to a larger diameter for improved fuel flow. Fittings have changed to brass, and parts are not interchangeable between old and new vehicles. Disassembly steps are the same for old and new vehicles, except that the nipples (3, 6, 10, and 12) are not required on LVSA1 series vehicles. Refer to TM 9-2320-297-24P for correct parts identification.

(a) Remove adapter (1, Figure 2-187), check valve (2), nipple (3), 90° elbow (4), nipple (6), and reducer (5) from top of right fuel tank (18).

(b) Remove 90° elbows (7 and 8) from end and top of tee fitting (9) respectively.

(c) Remove tee fitting (9) from nipple (10).

(d) Remove nipple (10) from tee fitting (11).

(e) Remove tee fitting (11) from nipple (12).

(f) Remove nipple (12) from right fuel tank (18).

(g) Remove pipe plugs (13 and 14) from bottom and end of right fuel tank (18).

(h) Remove right fuel tank cap (15), strainer (16), and retainer (17) from right fuel tank (18).

(2) Cleaning. Refer to Section III.

WARNING

Dry cleaning solvents are flammable. Do not clean parts near an open flame or in a smoking area. Contact with skin may cause irritation or cracking. Use of rubber gloves conforming to FED SPEC ZZ-G-381, face shield conforming to L-F-36, and other protective equipment is required according to OSHA Standards.

To prevent personal injury when steam cleaning, personnel shall wear proper protective equipment conforming to OSHA Standards.

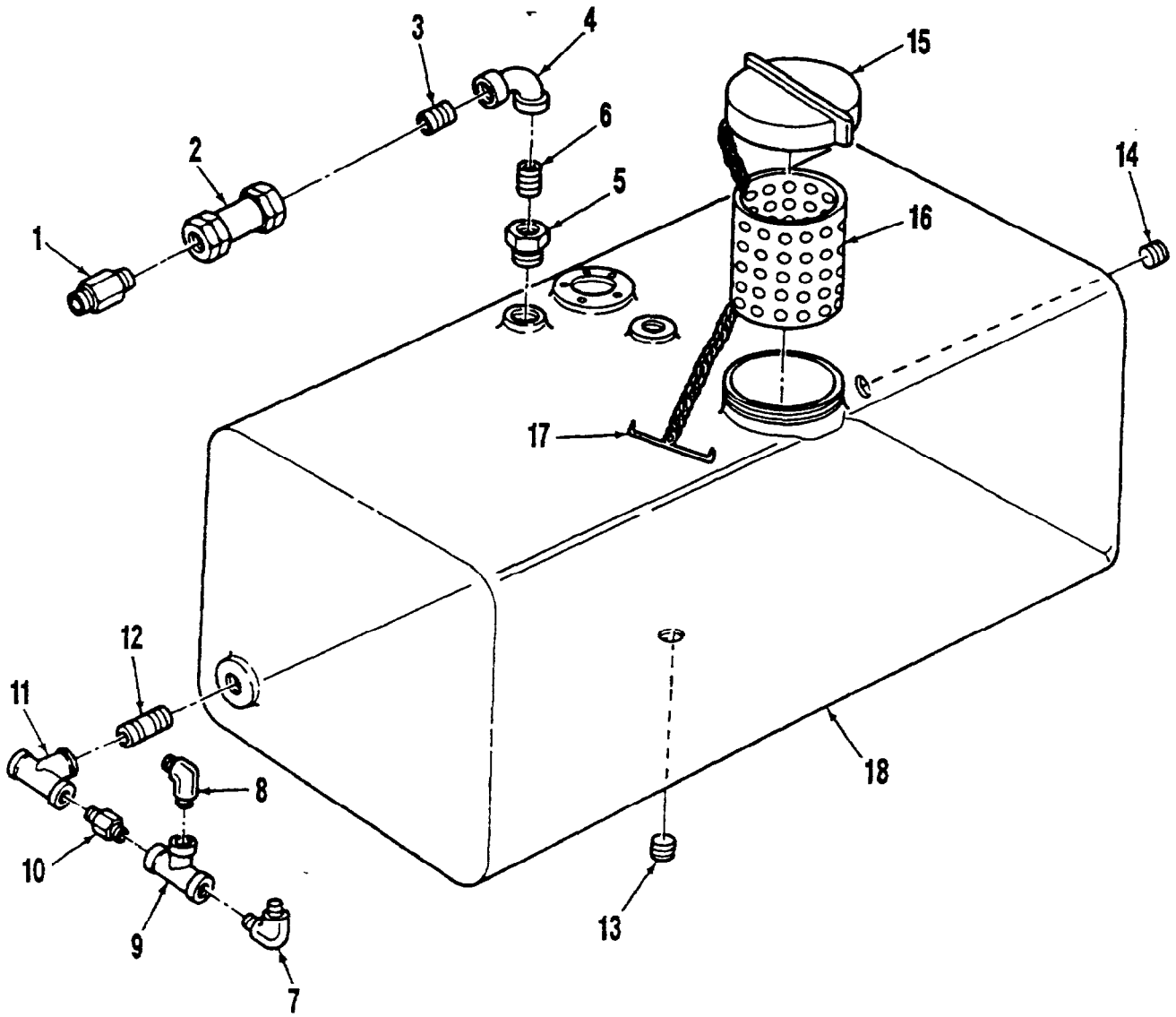

1. Adapter
2. Check Valve
3. Nipple
4. 90° Elbow
5. Reducer
6. Nipple
7. 90° Elbow
8. 90° Elbow
9. Tee Fitting
10. Nipple
11. Tee Fitting
12. Nipple
13. Pipe Plug
14. Pipe Plug
15. Right Fuel Tank Cap
16. Strainer
17. Retainer
18. Right Fuel Tank

Figure 2-187. Right Fuel Tank Disassembly/Assembly

WARNING

Avoid contact with alkaline paint and rust removers, phosphate coating compounds, 1,1,1-trichloroethane, and Dry Cleaning Solvent P-D-680. If solution comes in contact with skin, wash thoroughly with running water. Use of rubber gloves conforming to FED SPEC ZZ-G-381, face shield conforming to L-F-36, and other protective equipment is required according to OSHA Standards.

Adequate ventilation shall be provided while using solvents and cleaners. Prolonged breathing of vapors should be avoided. Do not use near heat or open flame. Avoid prolonged contact with skin. Use of rubber gloves conforming to FED SPEC ZZ-G-381, face shield conforming to L-F-36, and other protective equipment is required according to OSHA Standards.

(a) Hand clean right fuel tank cap and other smal metal components using Dry Cleaning Solvent, FED SPEC P-D-680.

(b) Steam clean right fuel tank thoroughly. This is necessary as a precaution against the explosion of fuel or fumes remaining in tank.

(c) Dip right fuel tank in a vat of alkaline rust remover conforming to MIL-C-46156 to remove paint, rust, and corrosion. Rinse right fuel tank in a vat of hot water.

(d) Coat interior of right fuel tank with Primer, Epoxy, MIL-P-4556 and paint right fuel tank according to TM 4750-15/1.

(3) Inspection

(a) Inspect filler cap, filler cap gasket, and screen for cracks, breaks, dry-rot, damage, deformation, and damaged threads.

(b) Inspect right fuel tank for cracks, dents, or leaking conditions.

(c) Inspect threaded areas for crossed, burred, or damaged threads.

(d) Pressure test fuel tank with compressed air, 6 psi maximum. Apply a solution of soap and water to all joints to inspect for leaks. No leakage is permitted.

(4) Repair

WARNING

Never use a torch on a fuel tank regardless of how long it has been empty unless the tank has been thoroughly cleaned with steam or rinsed thoroughly with 1,1,1-Trichloroethane, Tech, FED SPEC O-T-620.

(a) Repair minor leaks by soldering, brazing, or welding. Refer to TM 9-237 for welding applications.

(b) Repair dents using accepted sheet metal practices.

(c) Repair threaded areas according to TM 2350-45.

(d) Replace cracked, broken, damaged, or dry-rotted filler cap gasket, filler cap or screen.

(e) Replace right fuel tank damaged beyond repair.

(5) Assembly

CAUTION

To prevent contamination of fuel, do not coat first two threads of any fitting with pipe sealant.

NOTE

Coat all fittings, elbows, adapters, and pipe plugs with Pipe Sealant, Loctite 592 or equivalent.

Ensure all fittings are tightened securely.

(a) Install pipe plugs (13 and 14, figure 2-187) in bottom and end respectively of right fuel tank (18).

(b) Install retainer (17), strainer (16), and right fuel tank cap (15) on right fuel tank (18).

NOTE

Fuel tank lines and fittings for LVSA1 series vehicles have changed to a larger diameter for improved fuel flow. Fittings have changed to brass, and parts are not interchangeable between old and new vehicles. Assembly steps are the same for old and new vehicles, except that the nipple (12) is not required on LVSA1 series vehicles. Refer to TM 9-2320-297-24P for correct parts identification.

(c) Install nipple (12) in right fuel tank (18).

(d) Install tee fitting (11) on nipple (12).

(e) Install nipple fitting (9) on nipple (11).

(f) Install tee fitting (9) on nipple (10).

(g) Install 90° elbows (7 and 8) in end and top respectively of tee fitting (9) or (14).

NOTE

Fuel tank lines and fittings for LVSA1 series vehicles have changed to a larger diameter for improved fuel flow. Fittings have changed to brass, and parts are not interchangeable between old and new vehicles. Assembly steps are the same for old and new vehicles, except that the nipples (3) and (6) are not required on LVSA1 series vehicles. Refer to TM 9-2320-297-24P for correct parts identification.

(h) Install reducer (5), nipple (6), 90° elbow (4), nipple (3), check valve (2), and adapter (1) in top of right fuel tank (18).

2-179. MOTION CONTROL VALVE

b. Disassembly

WARNING

Plug (1, Figure 2-188) is under spring tension. To prevent personal injury or loss of parts, use care when removing plug (1).

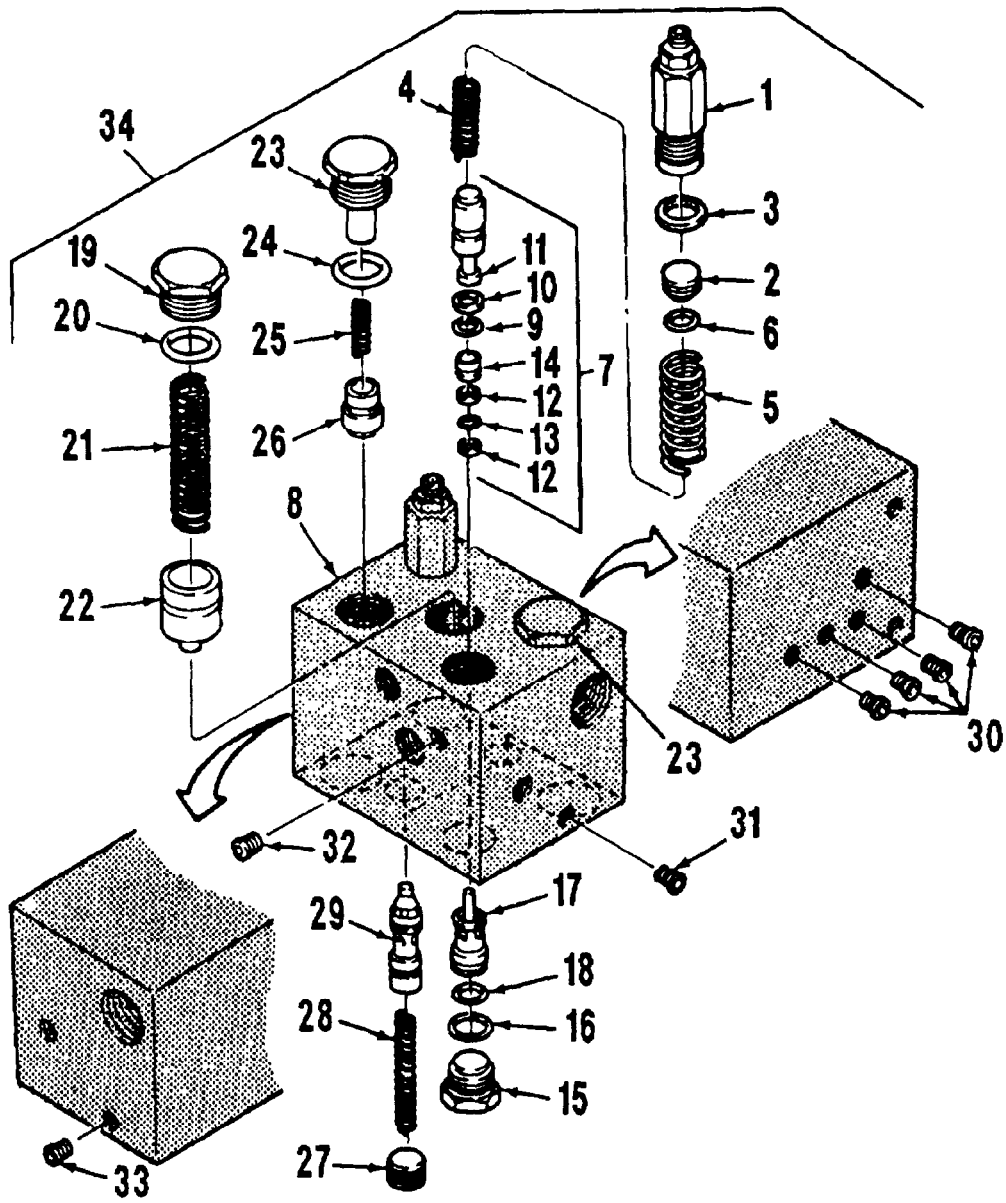

1. Plug
2. Spring End
3. Gasket
4. Inner Spring
5. Outer Spring
6. O-Ring
7. Honed Assembly
8. Motion Control Valve Body
9. O-Ring
10. Backup Ring
11. Upper Piston
12. Backup Ring (2)
13. O-Ring
14. Lower Piston
15. Plug (2)
16. O-Ring
17. Piston Assembly
18. O-Ring
19. Plug
20. O-Ring
21. Spring
22. Poppet
23. Plug (2)
24. O-Ring
25. Spring
26. Poppet
27. Plug (2)
28. Spring
29. Valve
30. Pipe Plug (4)
31. Pipe Plug
32. Pipe Plug
33. Pipe Plug
34. Motion Control Valve

Figure 2-188. Motion Control Valve Disassembly/Assembly

NOTE

It may be necessary to tap plug (1, Figure 2-188) to remove spring end (2).

(1) Remove plug (1), gasket (3), inner spring (4), outer spring (5), and spring end (2) from motion control valve body (8). Discard gasket (3).

(2) Remove O-ring (6) from spring end (2). Discard O-ring (6).

NOTE

Honed assembly (7) is a two-piece assembly. Lower piston (14) will remain in motion control valve body (8) after upper piston (11) is removed.

(3) To remove lower piston (14), use a wooden dowel that fits snugly in bore of piston. Then turn dowel while at the same time pulling up.

(4) Remove honed assembly (7) from motion control valve body (8).

(5) Remove O-ring (9) and backup ring (10) from upper piston (11). Discard O-ring (9) and backup ring (10).

(6) Remove two backup rings (12) and one O-ring (13) from lower piston (14). Discard two backup rings (12) and O-ring (13).

(7) Remove plug (15) and O-ring (16) from motion control valve body (8). Discard O-ring (16).

(8) Remove piston assembly (17) from motion control valve body (8).

(9) Remove O-ring (18) from piston assembly (17). Discard O-ring (18).

(10) Repeat steps (1 through 9) for remaining plugs (1 and 15).

(11) Remove plug (19), O-ring (20), spring (21), and poppet (22) from motion control valve body (8). Discard O-ring (20).

WARNING

Plug (23) is under spring tension. To prevent personal injury or loss of parts, use care when removing plug (23).

(12) Remove plug (23), O-ring (24), spring (25), and poppet (26) from motion control valve body (8). Discard O-ring (24).

(13) Repeat step (12) for remaining plug (23).

(14) Remove plug (27), spring (28), and valve (29) from motion control valve body (8).

(15) Repeat step (14) for remaining plug (27).

(16) Remove seven pipe plugs (30 through 33).

b. Cleaning. Refer to Section III.

WARNING

Dry cleaning solvents are flammable. Do not clean parts near an open flame or in a smoking area. Contact with skin may cause irritation or cracking. Use of rubber gloves conforming to FED SPEC ZZ-G-381, face shield conforming to L-F-36, and other protective equipment is required according to OSHA Standards.

Adequate ventilation shall be provided while using solvents and cleaners. Prolonged breathing of vapors should be avoided. Do not use near heat or open flame. Avoid prolonged contact with skin. Use of rubber gloves conforming to FED SPEC ZZ-G-381, face shield conforming to L-F-36, and other protective equipment is required according to OSHA Standards.

When cleaning with compressed air, regulate to 25 psi maximum. Eyeshields must be worn to prevent injury to the eyes or complete loss of sight.

(1) Remove loose dirt with cloth or small brush.

(2) Solvent clean motion control valve parts using Dry Cleaning Solvent, FED SPEC P-D-680. Blow off excess dry cleaning solvent using compressed air 25 psi maximum.

(3) Paint motion control valve parts according to TM 4750-15/1.

c. Inspection

(1) Inspect honed assembly for nicks, burs, scoring, pitting, and damage.

(2) Inspect poppets for nicks, burs, and damage.

(3) Inspect valves for nicks, burs, and damage.

d. Repair. Replace motion control valve assembly (34) if honed assembly (7), poppets (22 and 26), or valve (29) fails inspection.

e. Assembly

NOTE

Pipe plugs (30 through 33, Figure 2-188) have a sealant coating that allows the plugs to be reused up to ten times before plugs must be replaced.

(1) Install seven pipe plugs (30 through 33) in motion control valve body (8).

(2) Torque pipe plugs (30) to 15-20 ft-lb (20.34-27.12 N.m).

(3) Torque pipe plug (31) to 6-8 ft-lb (8.13-10.84 N.m).

(4) Tighten pipe plugs (32 and 33) securely.

(5) Install valve (29), spring (28), and plug (27) in motion control valve body (8). Torque plug (27) to 55-60 ft-lb (74.58-81.36 N.m).

(6) Repeat step (5) for remaining plug (27).

(7) Lubricate new O-ring (24) with clean oil conforming to MIL-L-2104.

(8) Install new O-ring (24) on plug (23).

(9) Install poppet (26), spring (25), and plug (23) in motion control valve body (8). Torque plug (23) to 125-150 ft-lb (169.5-203.4 N.m).

(10) Repeat steps (7 through 9) for remaining plug (23).

(11) Lubricate new O-ring (20) with clean oil conforming to MIL-L-2104.

(12) Install new O-ring (20) on plug (19).

(13) Install poppet (22), spring (21), and plug (19) in motion control valve body (8). Torque plug (19) to 135-150 ft-lb (183-203.4 N.m).

(14) Lubricate new O-ring (18) with clean oil conforming to MIL-L-2104.

(15) Install O-ring (18) on piston assembly (17).

(16) Install piston assembly (17) in motion control valve body (8).

(17) Lubricate new O-ring (16) with clean oil conforming to MIL-L-2104.

(18) Install new O-ring (16) on plug (15).

(19) Install plug (15) in motion control valve body (8). Torque plug (15) to 45-50 ft-lb (61.02-67.8 N.m).

(20) Repeat steps (14 through 19) for remaining plug (15).

(21) Lubricate new O-ring (13) and two new backup rings (12) with clean oil conforming to MIL-L-2104.

(22) Install new O-ring (13) on lower piston (14).

(23) Install two new backup rings (12) on lower piston (14).

(24) Roll lower piston (14) on a clean, smooth surface to seat backup rings (12) and O-ring (13).

(25) Install lower piston (14, Figure 2-188) in motion control valve body (8) with beveled edge facing up.

(26) Lubricate new O-ring (9) and new backup ring (10) with clean oil conforming to MIL-L-2104.

(27) Install new backup ring (10) and new O-ring (9) on upper piston (11).

(28) Roll upper piston (11) on a clean smooth surface to seat backup ring (10) and O-ring (9).

(29) Install upper piston (11) in motion control valve body (8).

(30) Lubricate new O-ring (6) with clean oil conforming to MIL-L-2104.

(31) Install new O-ring (6) on spring end (2).

(32) Slide spring end (2) and honed assembly (7) in plug (1).

(33) Install new gasket (3), inner spring (4), and outer spring (5) in motion control valve body (8).

(34) Install plug (1) in motion control valve body (8). Torque plug (1) to 40-45 ft-lb (54.24-61.02 N.m).

(35) Repeat steps (21 through 34) for remaining plug (1).

2-180. FAN MOUNT/RADIATOR SUPPORT

a. Disassembly. No disassembly required.

b. Cleaning. Refer to Section III.

WARNING

To prevent personal injury when steam cleaning, personnel shall wear proper protective equipment conforming to OSHA Standards.

Adequate ventilation shall be provided while using solvents and cleaners. Prolonged breathing of vapors should be avoided. Do not use near heat or open flame. Avoid prolonged contact with skin. Use of rubber gloves conforming to FED SPEC ZZ-G-381, face shield conforming to L-F-36, and other protective equipment is required according to OSHA Standards.

To prevent serious personal injury when abrasive blasting with high air pressure (120-150 psi), in open areas or confined areas, personnel shall wear full-body protective equipment conforming to OSHA Standards.

(1) Steam clean fan mount/radiator support (9, Figure 2-37) to remove dirt and grease.

(2) Abrasive blast fan mount/radiator support (9) to remove paint, rust, and corrosion.

(3) Paint fan mount/radiator support (9) according to TM 4750-15/1.

c. Inspection

(1) Inspect fan mount/radiator support (9) for breaks, cracks, bends, and deformation.

(2) Inspect fan mount/radiator support (9) weldments for breaks or cracks.

d. Repair

(1) Straighten bent or deformed fan mount/radiator (9) support using accepted sheet metal practices.

(2) Repair cracks or breaks in fan mount/radiator support (9) by welding. Refer to TM 9-237 for welding applications.

(3) Replace fan mount/radiator support (9) damaged beyond repair.

e. Assembly. No assembly required.

2-181. FAN AND FAN MOTOR

a. Fan

(1) Disassembly. No disassembly required.

(2) Cleaning. Refer to Section III.

WARNING

To prevent personal injury when steam cleaning, personnel shall wear proper protective equipment conforming to OSHA Standards.

Adequate ventilation shall be provided while using solvents and cleaners. Prolonged breathing of vapors should be avoided. Do not use near heat or open flame. Avoid prolonged contact with skin. Use of rubber gloves conforming to FED SPEC ZZ-G-381, face shield conforming to L-F-36, and other protective equipment is required according to OSHA Standards.

To prevent serious personal injury when abrasive blasting with high air pressure (120-150 psi), in open areas or confined areas, personnel shall wear full-body protective equipment conforming to OSHA Standards.

(a) Steam clean fan (6, Figure 2-38) to remove dirt and grease.

(b) Abrasive blast fan (6) to remove paint, rust, and corrosion.

(c) Paint fan (6) according to TM 4750-15/1.

(3) Inspection

(a) Inspect fan (6) for cracks, breaks, and deformation.

(b) Inspect fan blades for rust, pits, chips, and damage.

(4) Repair. Replace fan (6) failing inspection.

(5) Assembly. No assembly required.

b. Fan Motor. Refer to TM 2320-34/13 for disassembly, cleaning, inspection, repair, and assembly of fan motor (4, Figure 2-39).

2-182. QUICK DISCONNECT FITTING. Replace damaged or defective quick disconnect fitting (3, Figure 2-40).

2-183. MAIN AIR RESERVOIRS

a. Right Main Air Reservoir

(1) Disassembly

NOTE

Note position and location of all fittings before removal to ensure proper installation.

(a) Remove drain cock (2, Figure 2-189) from right main air reservoir (1).

(b) Remove straight fitting (3) and 45° elbow (4) from tee (5).

NOTE

Air line fittings for the LVSA1 right main air reservoir has changed from a nipple and tee to street tee. When repairing a non-A1 vehicle, use the new style street tee to replace the old style tee. Refer to TM 9-2320-297-24P for correct parts identification.

(c) Remove tee (5) from check valve (7).

(d) Deleted.

(e) Remove check valve (7) from right main air reservoir (1).

(f) Deleted.

(g) Remove two 90° elbows (9 and 10) from tee (11).

(h) Remove tee (11) from right main air reservoir (1).

(i) Deleted.

(j) Remove 90° elbow (13) from right main air reservoir (1).

(k) Remove 90° elbow (14) from tee (15).

(l) Remove straight fitting (16) from check valve (18).

(m) Remove check valve (18) from tee (15).

(n) Remove tee (15) and nipple (19) from reducer (20).

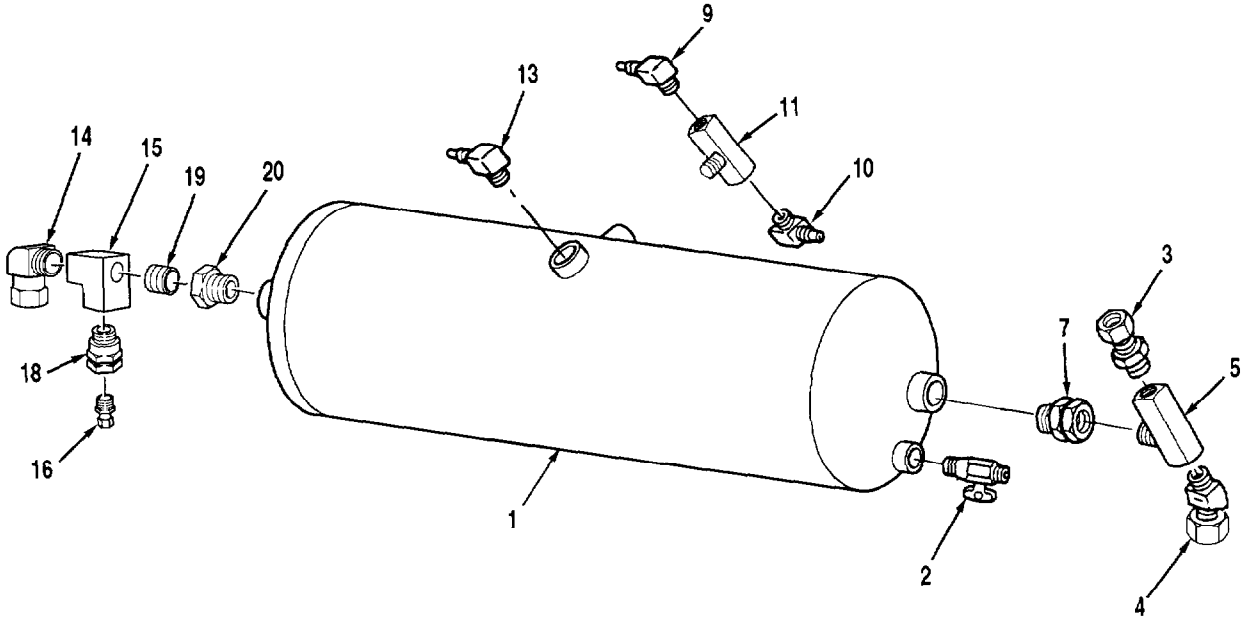

1. Right Main Air Reservoir
2. Drain Cock
3. Straight Fitting
4. 45° Elbow
5. Tee
6. Deleted
7. Check Valve
8. Deleted
9. 90° Elbow
10. 90° Elbow
11. Tee
12. Deleted
13. 90° Elbow
14. 90° Elbow
15. Tee
16. Straight Fitting
17. Deleted
18. Check Valve
19. Nipple
20. Reducer

Figure 2-189. Right Main Air Reservoir Disassembly/Assembly

(o) Remove nipple (19) from tee (15).

(p) Remove reducer (20) from right main air reservoir (1).

(2) Cleaning. Refer to Section III.

WARNING

Avoid contact with alkaline paint and rust removers, phosphate coating compounds, 1,1,1-Trichloroethane, and Dry Cleaning Solvent P-D-680. If solution comes in contact with the skin, wash thoroughly with running water. Use of rubber gloves conforming to FED SPEC ZZ-G-381, face shield conforming to L-F-36, and other protective equipment is required according to OSHA Standards.

Adequate ventilation shall be provided while using solvents and cleaners. Prolonged breathing of vapors should be avoided. Do not use near heat or open flame. Avoid prolonged contact with skin. Use of rubber gloves conforming to FED SPEC ZZ-G-381, face shield conforming to L-F-36, and other protective equipment is required according to OSHA Standards.

(a) Submerge main air reservoir in alkaline rust remover conforming to MIL-C-46156.

(b) Rinse main air reservoir interior thoroughly with pressurized cold water, then dip in hot water.

(c) Drain water from main air reservoir and air dry interior.

(d) Coat main air reservoir interior using Epoxy Primer Coating, conforming to MIL-P-52192.

(e) Paint right main air reservoir according to TM 4750-15/1.

(3) Inspection

(a) Use flashlight to inspect main air reservoir interior for corrosion.

(b) Inspect the main air reservoir for dents and cracks. Minor dents not to exceed 1/16-inch deep and 1-inch long are acceptable provided there is not more than one dent in a 10-square inch area.

(c) Inspect threaded areas for crossed, smashed, burred, and damaged threads.

(4) Repair

(a) Repair threaded areas according to TM 2350-45.

(b) Replace defective drain cocks and fittings.

(c) Replace right main air reservoir damaged beyond repair.

(5) Assembly

NOTE

Apply Pipe Sealant, Loctite 592 or equivalent to threads of nipples, fittings, check valves, and reducers before installing.

Ensure all fittings are tightened securely.

(a) Install reducer (20, Figure 2-189) in right main air reservoir (1).

(b) Install nipple (19) in tee (15).

(c) Install tee (15) and nipple (19) in reducer (20).

(d) Install check valve (18) in tee (15).

(e) Install straight fitting (16) in check valve (18).

(f) Install 90° elbow (14) in tee (15).

(g) Install 90° elbow (14) in right main air reservoir (1).

(h) Deleted.

(i) Install tee (11) in right main air reservoir (1).

(j) Install two 90° elbows (9 and 10) in tee (11).

(k) Deleted.

(l) Install check valve (7) in right main air reservoir (1).

(m) Deleted.

(n) Install tee (5) in check valve (7).

(o) Install straight fitting (3) and 45° elbow (4) in tee (5).

(p) Install new drain cock (2) in right main air reservoir (1).

b. Left Main Air Reservoir

NOTE

Note position and location of all fittings before removal to ensure proper installation.

(1) Disassembly

(a) Remove drain cock (2, Figure 2-190) from left main air reservoir (1).

(b) Remove straight fitting (3) and hex nipple (5) from tee (4).

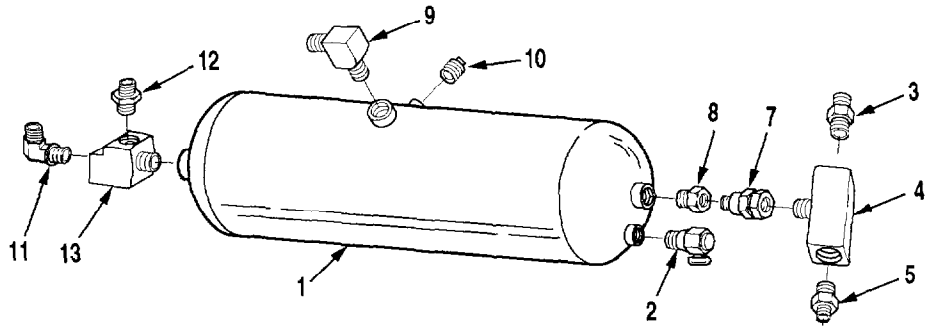

1. Left Main Air Reservoir
2. Drain Cock
3. Straight Fitting
4. Tee
5. Hex Nipple
6. Deleted
7. Check Valve
8. Reducer
9. 90° Elbow
10. Plug
11. 90° Elbow
12. Straight Fitting
13. Tee
14. Deleted

Figure 2-190. Left Main Air Reservoir Disassembly/Assembly

(c) Remove tee (4) from check valve (7).

NOTE

Air line fittings for the LVSA1 left main air reservoir has changed from a nipple and tee to street tee. When repairing a non-A1 vehicle, use the new style tee to replace the old style tee. Refer to TM 9-2320-297-24P for correct air line fittings.

(d) Deleted.

(e) Remove check valve (7) and reducer (8) from left main air reservoir (1).

(f) Remove check valve (7) from reducer (8).

(g) Remove 90° elbow (9) and plug (10) from left main air reservoir (1).

(h) Remove 90° elbow (11) and straight fitting (12) from tee (13).

(i) Remove tee (13) from left main air reservoir (1).

(j) Deleted.

(2) Cleaning. Refer to Section III. Clean left main air reservoir in same manner as right main air reservoir.

(3) Inspection. Inspect left main air reservoir in same manner as right main air reservoir.

(4) Repair. Repair left main air reservoir in same manner as right main air reservoir.

(5) Assembly

NOTE

Apply Pipe Sealant, Loctite 592 or equivalent to threads of nipples, fittings, check valves, and reducers before installing.

Ensure all fittings are tightened securely.

(a) Deleted.

(b) Install tee (13, Figure 2-190) in left main air reservoir (1).

(c) Install straight fitting (12) and 90° elbow (11) in tee (13).

(d) Install plug (10) and 90° elbow (9) in left main air reservoir (1).

(e) Install check valve (7) in reducer (8).

(f) Install reducer (8) and check valve (7) in left main air reservoir (1).

(g) Deleted.

(h) Install tee (4) in check valve (7).

(i) Install straight fitting (3) and hex nipple (5) in tee (4).

(j) Install new drain cock (2) in left main air reservoir (1).

2-184. GRAB HANDLE - LEFT FENDER

a. Disassembly. No disassembly required.

b. Cleaning. Refer to Section III.

WARNING

To prevent personal injury when steam cleaning, personnel shall wear proper protective equipment conforming to OSHA Standards.

Adequate ventilation shall be provided while using solvents and cleaners. Prolonged breathing of vapors should be avoided. Do not use near heat or open flame. Avoid prolonged contact with skin. Use of rubber gloves conforming to FED SPEC ZZ-G-381, face shield conforming to L-F-36, and other protective equipment is required according to OSHA Standards.

To prevent serious personal injury when abrasive blasting with high air pressure (120-150 psi), in open areas or confined areas, personnel shall wear full-body protective equipment conforming to OSHA Standards.

(1) Steam clean grab handle (7 or 7.1, Figure 2-42) to remove dirt and grease.

(2) Abrasive blast grab handle (7 or 7.1) to remove paint, rust, and corrosion.

(3) Paint grab handle (7 or 7.1) according to TM 4750-15/1.

c. Inspection. Inspect grab handle (7 or 7.1) for cracks, breaks, and deformation.

d. Repair

(1) Repair cracks or breaks by welding. Refer to TM 9-237 for welding applications.

(2) Replace grab handle (7 or 7.1) damaged beyond repair.

e. Assembly. No assembly required.

2-184.1 GRAB HANDLE - REPLACEMENT (LVSA1 SERIES VEHICLES ONLY)

a. Disassembly. No disassembly required.

b. Cleaning. Refer to Section III.

WARNING

To prevent personal injury when steam cleaning, personnel shall wear proper protective equipment conforming to OSHA Standards.

WARNING

Adequate ventilation shall be provided while using solvents and cleaners. Prolonged breathing of vapors should be avoided. Do not use near heat or open flame. Avoid prolonged contact with skin. Use of rubber gloves conforming to FED SPEC ZZ-G-381, face shield conforming to L-F-36, and other protective equipment is required according to OSHA Standards.

To prevent serious personal injury when abrasive blasting with high air pressure (120-150 psi), in open areas or confined areas, personnel shall wear full-body protective equipment conforming to OSHA Standards.

(1) Steam clean grab handle (3 and 8, Figure 2-190.1) to remove dirt and grease.

(2) Abrasive blast grab handle (3 and 8) to remove paint, rust, and corrosion.

(3) Paint grab handle (3 and 8) according to TM 4750-15/1.

c. Inspection. Inspect grab handle (3 and 8) for cracks, breaks, and deformation.

d. Repair

(1) Repair cracks or breaks by welding. Refer to TM 9-237 for welding applications.

(2) Replace grab handle (3 and 8) damaged beyond repair.

e. Assembly. No assembly required.

2-185. AIR CLEANER FILTER ELEMENT

a. Disassembly.

(1) Remove two nuts (2, Figure 2-191) and capscrews (1) from sealing frame (9) and super clone (3). Position super clone (3) out of the way.

(2) Remove four nuts (5) and capscrews (4) from sealing frame (9), plenum pan (12), and clamping straps (6).

(3) Remove two clamping straps (6) from sealing frame (9), plenum pan (12) primary filter element (11).

(4) Remove four nuts (8) and capscrews (7) from plenum pan (12), sealing frame (9), and work light bracket (10).

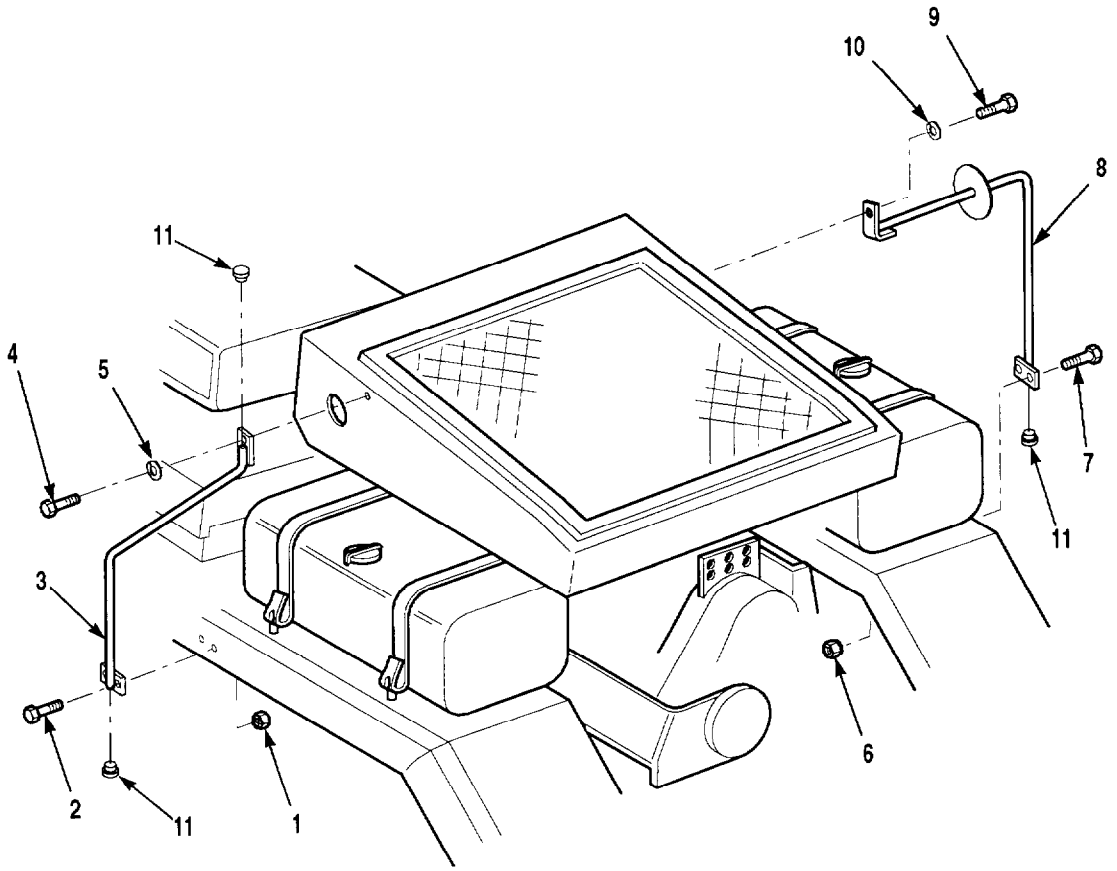

1. Locknut (2)
2. Capscrew (2)
3. Grab Handle
4. Capscrew
5. Lockwasher
6. Locknut (2)
7. Capscrew (2)
8. Grab Handle
9. Capscrew
10. Lockwasher
11. Plug (3)

Figure 2-190.1. Grab Handle Replacement
(LVSA1 Series Vehicles Only)

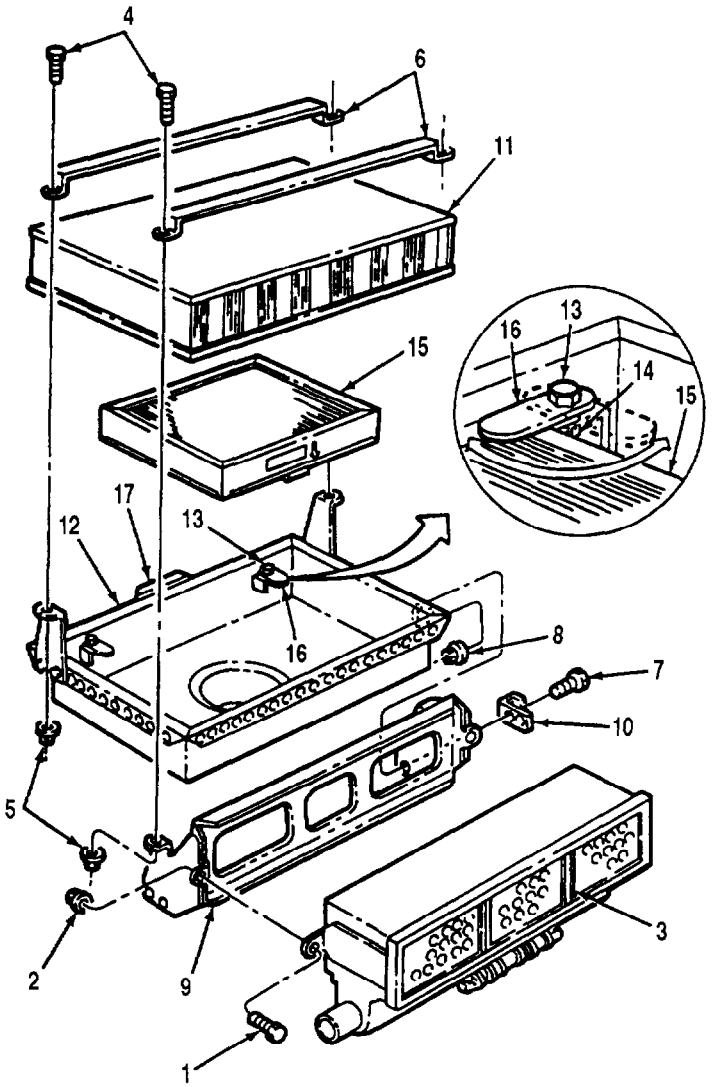

1. Capscrew (2)
2. Nut (2)
3. Super Clone
4. Capscrew (4)
5. Nut
6. Clamping Strap (2)
7. Capscrew (4)
8. Nut (4)
9. Sealing Frame
10. Work Light Bracket
11. Primary Filter Element
12. Plenum Pan
13. Capscrew (4)
14. Nut (4)
15. Secondary Filter Element
16. Holding Tab (4)
17. Locating Strap

2-191. Air Cleaner Disassembly/Assembly

(5) Remove sealing frame (9) and work light bracket (10) from plenum pan (12).

(6) Remove primary filter element (11) from plenum pan (12). Discard primary filter element (11).

(7) Loosen four nuts (14) and capscrews (13) on holding tabs (16).

(8) Swing holding tabs (16) away from secondary filter element (15).

(9) Remove secondary filter element (15) from plenum pan (12). Discard secondary filter element (15).

b. Cleaning. Refer to Section III.

WARNING

To prevent personal injury when steam cleaning, personnel shall wear proper protective equipment conforming to OSHA Standards.

Adequate ventilation shall be provided while using solvents and cleaners. Prolonged breathing of vapors should be avoided. Do not use near heat or open flame. Avoid prolonged contact with skin. Use of rubber gloves conforming to FED SPEC ZZ-G-381, face shield conforming to L-F-36, and other protective equipment is required according to OSHA Standards.

To prevent serious personal injury when abrasive blasting with high air pressure (120-150 psi), in open areas or confined areas, personnel shall wear full-body protective equipment conforming to OSHA Standards.

(1) Steam clean air cleaner assembly parts to remove dirt and grease.

(2) Abrasive blast metal air cleaner assembly parts to remove paint, rust, and corrosion.

(3) Paint air cleaner assembly according to TM 4750-15/1.

c. Inspection

(1) Inspect plenum pan for cracks, breaks, and deformation.

(2) Inspect sealing frame for cracks, breaks, and deformation.

(3) Inspect super clone for cracks, breaks, and deformation.

(4) Inspect threaded areas for crossed, smashed, burred, or damaged threads.

d. Repair

(1) Repair plenum pan, sealing frame, and super clone cracks and breaks by welding or brazing. Refer to TM 9-237 for welding applications.

(2) Straighten plenum pan, sealing frame, and super clone deformation using accepted sheet metal practices.

(3) Repair damaged threads according to TM 2350-45.

(4) Replace all air cleaner assembly parts damaged beyond repair.

e. Assembly

(1) Install new secondary filter element (15, Figure 2-191) in plenum pan (12).

(2) Swing holding tabs (16) over secondary filter element (15) so it is secured in plenum pan (12).

(3) Tighten four capscrews (13) and nuts (14) securely.

(4) Install new primary filter element (11) in plenum pan (12) with open side of primary filter element (11) facing away from locating strap (17).

NOTE

When tightening capscrews (7), lightly tap sealing frame (9) to ensure it is fully seated.

(5) Install sealing frame (9) on primary filter element (11).

(6) Align holes in sealing frame (9) with holes in plenum pan (12).

(7) Install four capscrews (7), work light bracket (10), and nuts (8) on sealing frame (9) and plenum pan (12). Tighten nuts (8) securely.

(8) Install two clamping straps (6) on primary filter element (11).

(9) Install four capscrews (4) and nuts (5) in clamping straps (6), sealing frame (9), and plenum pan (12). Tighten nuts (5) securely.

(10) Install super clone (3), two capscrews (1), and nuts (2) on sealing frame (9). Tighten nuts (2) securely.

2-186. AIR CLEANER INTAKE DUCTING

a. Disassembly. No disassembly required

b. Cleaning. Refer to Section III.

WARNING

To prevent personal injury when steam cleaning, personnel shall wear proper protective equipment conforming to OSHA Standards.

WARNING

Adequate ventilation shall be provided while using solvents and cleaners. Prolonged breathing of vapors should be avoided. Do not use near heat or open flame. Avoid prolonged contact with skin. Use of rubber gloves conforming to FED SPEC ZZ-G-381, face shield conforming to L-F-36, and other protective equipment is required according to OSHA Standards.

To prevent serious personal injury when abrasive blasting with high air pressure (120-150 psi), in open areas or confined areas, personnel shall wear full-body protective equipment conforming to OSHA Standards.

When cleaning with compressed air, regulate to 25 psi maximum. Eyeshields must be worn to prevent injury to the eyes or complete loss of sight.

(1) Steam clean metal intake ducting parts to remove dirt and grease.

(2) Abrasive blast metal intake ducting parts to remove paint, rust, and corrosion.

(3) Wash rubber intake ducting parts with water and detergent conforming to MIL-D-16791. Blow off excess water using compressed air 25 psi maximum.

(4) Paint metal intake ducting parts according to TM 4750-15/1.

c. Inspection

(1) Inspect metal intake ducting parts for cracks, breaks, and deformation.

(2) Inspect rubber intake ducting parts for holes, frays, tears, and other damage.

(3) Inspect threaded areas for crossed, smashed, burred, and damaged threads.

d. Repair

(1) Replace metal intake ducting parts failing inspection.

(2) Replace rubber intake ducting parts failing inspection.

(3) Repair threaded areas according to TM 2350-45.

e. Assembly. No assembly required.

2-187. ALTERNATOR DIODE AND CIRCUIT BREAKER

a. Disassembly. No disassembly required.

b. Cleaning. Refer to Section III.

WARNING

Adequate ventilation shall be provided while using solvents and cleaners. Prolonged breathing of vapors should be avoided. Do not use near heat or open flame. Avoid prolonged contact with skin. Use of rubber gloves conforming to FED SPEC ZZ-G-381, face shield conforming to L-F-36, and other protective equipment is required according to OSHA Standards.

(1) Remove loose dirt with cloth or small brush.

(2) Hand clean alternator diode (4, Figure 2-45) and circuit breaker (15) using Isopropyl Alcohol, FED SPEC TT-I-735. Allow to air dry.

c. Inspection

(1) Inspect alternator diode (4) and circuit breaker (15) for damage.

(2) Inspect alternator diode (4) and circuit breaker (15) for proper function using a volt/ohm meter.

(3) Inspect alternator diode (4) and circuit breaker (15) for damaged connectors.

d. Repair. Replace alternator diode (4) and circuit breaker (15) damaged beyond repair or failing inspection.

e. Assembly. No assembly required.

2-188. STARTER RELAY

a. Disassembly. No disassembly required.

b. Cleaning. Refer to Section III.

WARNING

Adequate ventilation shall be provided while using solvents and cleaners. Prolonged breathing of vapors should be avoided. Do not use near heat or open flame. Avoid prolonged contact with skin. Use of rubber gloves conforming to FED SPEC ZZ-G-381, face shield conforming to L-F-36, and other protective equipment is required according to OSHA Standards.

(1) Remove loose dirt with cloth or small brush.

(2) Hand clean starter relay (4, Figure 2-46) using Isopropyl Alcohol, FED SPEC TT-I-735. Allow to air dry.

c. Inspection

(1) Inspect starter relay (4) for damage.

(2) Inspect starter relay (4) for proper function using volt/ohm meter.

(3) Inspect starter relay (4) for damaged connectors

(4) Inspect starter relay (4) for crossed, smashed, or damaged threads.

d. Repair. Replace starter relay (4) damaged beyond repair or failing inspection.

e. Assembly. No assembly required.

2-189. ETHER BOTTLE, AIR DRYER, AND AIR DRYER MOUNTING BRACKET

a. Ether Bottle. Ether bottle (3, Figure 2-47) shall be replaced 100 percent.

b. Air Dryer. Refer to TM 2320-20/12 for disassembly, cleaning, inspection, repair, and assembly of air dryer (9, Figure 2-48).

c. Air Dryer Mounting Bracket

(1) Disassembly. No disassembly required.

(2) Cleaning. Refer to Section III.

WARNING

To prevent personal injury when steam cleaning, personnel shall wear proper protective equipment conforming to OSHA Standards.

Adequate ventilation shall be provided while using solvents and cleaners. Prolonged breathing of vapors should be avoided. Do not use near heat or open flame. Avoid prolonged contact with skin. Use of rubber gloves conforming to FED SPEC ZZ-G-381, face shield conforming to L-F-36, and other protective equipment is required according to OSHA Standards.

To prevent serious personal injury when abrasive blasting with high air pressure (120-150 psi), in open areas or confined areas, personnel shall wear full-body protective equipment conforming to OSHA Standards.

(a) Steam clean air dryer mounting bracket (1, Figure 2-49) to remove dirt and grease.

(b) Abrasive blast air dryer mounting bracket (1) to remove paint, rust, and corrosion.

(c) Paint air dryer mounting bracket (1) according to TM 4750-15/1.

(3) Inspection

(a) Inspect air dryer mounting bracket (1) for cracks and breaks.

(b) Inspect air dryer mounting bracket (1) for bends and deformation.

(4) Repair

(a) Repair cracks or breaks in air dryer mounting bracket (1) by welding. Refer to TM 9-237 for welding applications.

(b) Repair bent or deformed air dryer mounting bracket (1) using accepted sheet metal practices.

(c) Replace air dryer mounting bracket (1) damaged beyond repair.

(5) Assembly. No assembly required.

2-190. HYDRAULIC OIL FILTER HOUSING AND OIL LEVEL GAUGE

a. Hydraulic Oil Filter Housing

(1) Disassembly

(a) Loosen six capscrews (1, Figure 2-192) on hydraulic oil filter housing (2).

WARNING

Cover (3) is under pressure. To prevent personal injury, remove cover (3) with extreme care.

(b) Turn cover (3) counterclockwise and remove from hydraulic oil filter housing (2).

(c) Remove seal ring (4) from hydraulic oil filter housing (2).

(d) Remove spring (5) and by-pass valve (6).

(e) Remove hydraulic oil filter (7) and two O-rings (8) from hydraulic oil filter housing (2). Discard hydraulic oil filter (7) and O-rings (8).

(f) Remove plug (9) from hydraulic oil filter housing (2).

(g) Remove pressure check valve (10), protective cap (11), and O-ring (12) from hydraulic oil filter housing (2). Discard O-ring (12).

(2) Cleaning. Refer to Section III.

WARNING

To prevent personal injury when steam cleaning, personnel shall wear proper protective equipment conforming to OSHA Standards.

Adequate ventilation shall be provided while using solvents and cleaners. Prolonged breathing of vapors should be avoided. Do not use near heat or open flame. Avoid prolonged contact with skin. Use of rubber gloves conforming to FED SPEC ZZ-G-381, face shield conforming to L-F-36, and other protective equipment is required according to OSHA Standards.

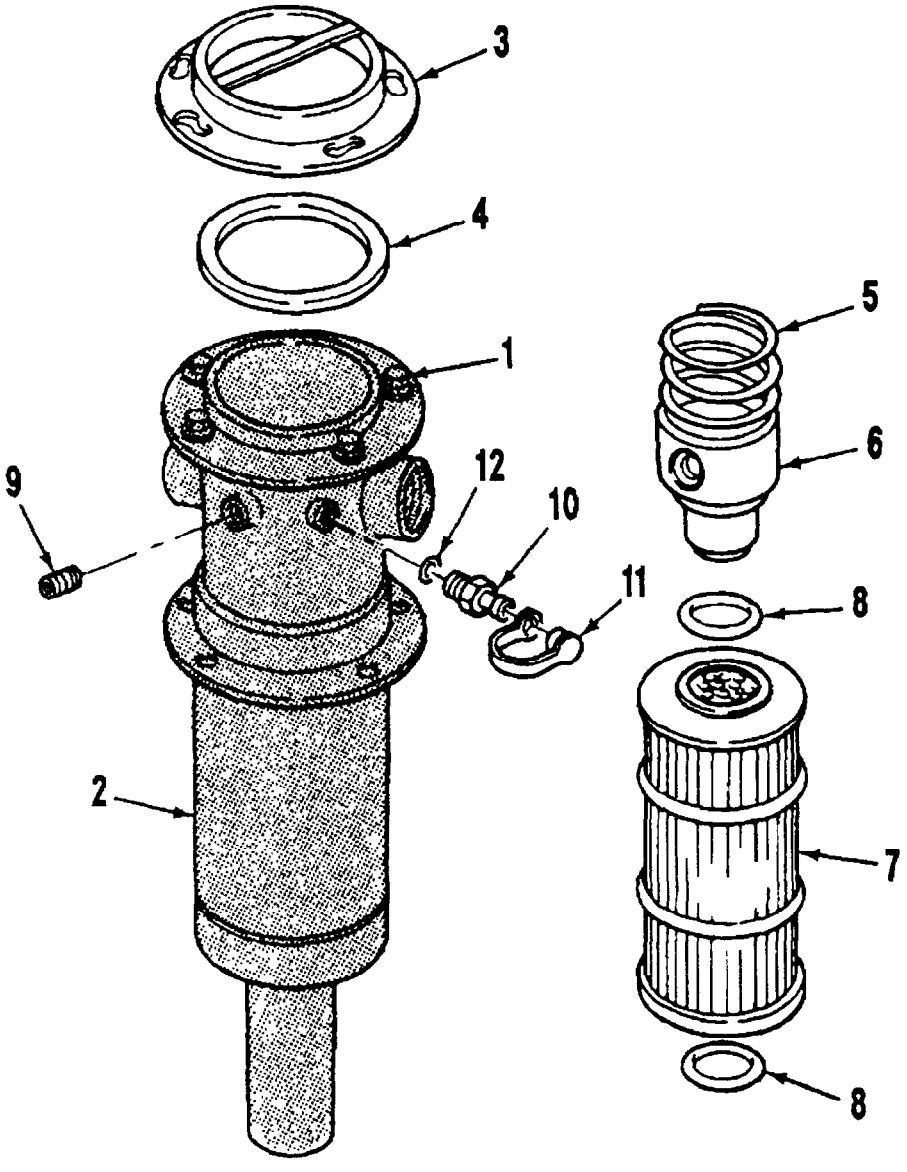

1. Capscrew (6)
2. Hydraulic Oil Filter Housing
3. Cover
4. Seal Ring
5. Spring
6. By-Pass Valve
7. Hydraulic Oil Filter
8. O-Ring (2)
9. Plug
10. Pressure Check Valve
11. Protective Cap
12. O-Ring

Figure 2-192. Hydraulic Oil Filter Housing Disassembly/Assembly

WARNING

To prevent serious personal injury when abrasive blasting with high air pressure (120-150 psi), in open areas or confined areas, personnel shall wear full-body protective equipment conforming to OSHA Standards.

When cleaning with compressed air, regulate to 25 psi maximum. Eyeshields must be worn to prevent injury to the eyes or complete loss of sight.

Avoid contact with alkaline paint and rust removers, phosphate coating compounds, 1,1,1-Trichloroethane, and Dry Cleaning Solvent P-D-680. If solution comes in contact with skin, wash thoroughly with running water. Use of rubber gloves conforming to FED SPEC ZZ-G-381, face shield conforming to L-F-36, and other protective equipment is required according to OSHA Standards.

(a) Steam clean hydraulic oil filter housing to remove dirt and grease.

(b) Hand clean internal hydraulic oil filter housing parts using Dry Cleaning Solvent, FED SPEC P-D-680. Blow off excess solvent using compressed air 25 psi maximum.

(c) Abrasive blast hydraulic oil filter housing to remove paint, rust, and corrosion.

(d) Paint hydraulic oil filter housing according to TM 4750-15/1.

(3) Inspection

(a) Inspect hydraulic oil filter housing for cracks and breaks.

(b) Inspect hydraulic oil filter housing for bends and deformation.

(c) Inspect seal ring for wear and damage.

(4) Repair

(a) Repair cracks or breaks in hydraulic oil filter housing by welding. Refer to TM 9-237 for welding applications.

(b) Repair bent or deformed hydraulic oil filter housing using accepted sheet metal practices.

(c) Replace hydraulic oil filter housing damaged beyond repair.

(5) Assembly

(a) Install new O-ring (12), pressure check valve (10), and protective cap (11) in hydraulic oil filter housing (2). Tighten pressure check valve (10) securely.

CAUTION

To prevent contamination of hydraulic oil, do not coat first two threads of any fitting with pipe sealant.

NOTE

Coat all fittings, elbows, adapters, and pipe plugs with Pipe Sealant, Loctite 592 or equivalent.

(b) Coat threads of plug (9, Figure 2-192) with pipe sealant and install in hydraulic oil filter housing (2). Tighten plug (9) securely.

(c) Position two new O-rings (8) on new hydraulic oil filter (7).

(d) Install new hydraulic oil filter (7) in hydraulic oil filter housing (2).

(e) Install by-pass valve (6) with spring (5) in hydraulic oil filter (7).

(f) Install seal ring (4) in cover (3).

(g) Position cover (3) on hydraulic oil filter housing (2).

(h) Depress cover (3) and turn clockwise to latch cover (3) on six capscrews (1). Tighten six capscrews (1) securely.

b. Hydraulic Oil Level Gauge

(1) Disassembly, No disassembly required.

(2) Cleaning. Refer to Section III.

WARNING

Avoid contact with alkaline paint and rust removers, phosphate coating compounds, 1,1,1,-Trichloroethane, and Dry Cleaning Solvent P-D-680. If solution comes in contact with skin, wash thoroughly with running water. Use of rubber gloves conforming to FED SPEC ZZ-G-381, face shield conforming to L-F-36, and other protective equipment is required according to OSHA Standards.

Adequate ventilation shall be provided while using solvents and cleaners. Prolonged breathing of vapors should be avoided. Do not use near heat or open flame. Avoid prolonged contact with skin. Use of rubber gloves conforming to FED SPEC ZZ-G-381, face shield conforming to L-F-36, and other protective equipment is required according to OSHA Standards.

When cleaning with compressed air, regulate to 25 psi maximum. Eyeshields must be worn to prevent injury to the eyes or complete loss of sight.

(a.) Remove loose dirt with cloth or small brush.

(b) Hand clean hydraulic oil level gauge (14, Figure 2-50) using Dry Cleaning Solvent, FED SPEC P-D-680. Blow off excess solvent using compressed air 25 psi maximum.

(c) Paint hydraulic oil level gauge (14) according to TM 4750-15/1.

(3) Inspection. Inspect hydraulic oil level gauge (14) for cracked or broken sight glass and crossed, burred, or damaged threads.

(4) Repair

(a) Repair damaged threads according to TM 2350-45.

(b) Replace damaged hydraulic oil level gauge (14).

(5) Assembly. No assembly required.

2-190.1. HYDRAULIC OIL FILTER HOUSING AND OIL LEVEL GAUGE (LVSA1 SERIES VEHICLES ONLY)

a. Hydraulic Oil Filter Housing

WARNING

Cover assembly (2) is under pressure. To prevent personal injury, remove cover assembly (2) with extreme care.

(1) Disassembly

(a) Remove four capscrews with captive lockwashers (1, Figure 2-192.1) and cover assembly (2) from hydraulic oil filter housing (3). Discard capscrews with captive lockwashers (1).

(b) Remove and discard O-ring (4) from hydraulic oil filter housing (3).

(c) Remove three capscrews (5), by-pass valve (6), and springs (7) from cover assembly (2).

(d) Remove hydraulic oil filter (8) and two O-rings (9) from hydraulic oil filter housing (3). Discard hydraulic oil filter (8) and O-rings (9).

(e) Remove oil sampling valve (10) from hydraulic oil filter housing (3).

(f) Remove pressure check valve (11), protective cap (12), and O-ring (13) from hydraulic oil filter housing (3). Discard O-ring (13).

(2) Cleaning. Refer to Section III.

WARNING

To prevent personal injury when steam cleaning, personnel shall wear proper protective equipment conforming to OSHA Standards.

Adequate ventilation shall be provided while using solvents and cleaners. Prolonged breathing of vapors should be avoided. Do not use near heat or open flame. Avoid prolonged contact with skin. Use of rubber gloves conforming to FED SPEC ZZ-G-381, face shield conforming to L-F-36, and other protective equipment is required according to OSHA Standards.

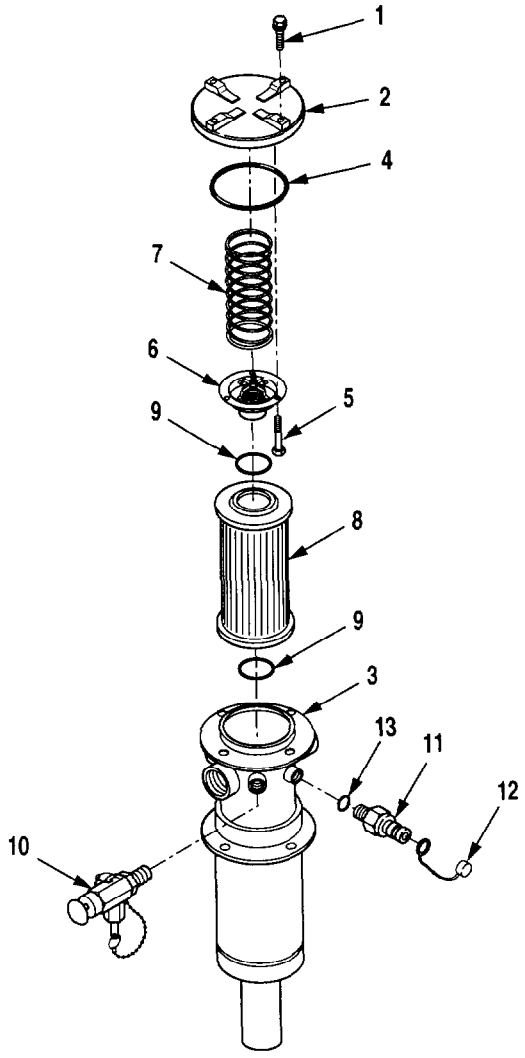

1. Capscrew with Captive Lockwasher (4)
2. Cover Assembly
3. Hydraulic Oil Filter Housing
4. O-ring
5. Capscrew (3)
6. By-Pass Valve
7. Spring
8. Hydraulic Oil Filter
9. O-ring (2)
10. Oil Sampling Valve
11. Pressure Check Valve
12. Protective Cap
13. O-ring

Figure 2-192.1. Hydraulic Oil Filter Housing Disassembly/Assembly (LVSA1 Series Vehicles Only).

WARNING

To prevent serious personal injury when abrasive blasting with high air pressure (120-150 psi), in open areas or confined areas, personnel shall wear full-body protective equipment conforming to OSHA Standards.

When cleaning with compressed air, regulate to 25 psi maximum. Eyeshields must be worn to prevent injury to the eyes or complete loss of sight.

Avoid contact with alkaline paint and rust removers, phosphate coating compounds, 1,1,1,-Trichloroethane, and Dry Cleaning Solvent P-D-680. If solution comes in contact with skin, wash thoroughly with running water. Use of rubber gloves conforming to FED SPEC ZZ-G-381, face shield conforming to L-F-36, and other protective equipment is required according to OSHA Standards.

(a) Steam clean hydraulic oil filter housing to remove dirt and grease.

(b) Hand clean internal hydraulic oil filter housing parts using Dry Cleaning Solvent, FED SPEC P-D-680. Blow off excess solvent using compressed air 25 psi maximum.

(c) Abrasive blast hydraulic oil filter housing to remove paint, rust, and corrosion.

(d) Paint hydraulic oil filter housing according to TM 4750-15/1.

(3) Inspection

(a) Inspect hydraulic oil filter housing for cracks and breaks.

(b) Inspect hydraulic oil filter housing for bends and deformation.

(c) Inspect seal ring for wear and damage.

(4) Repair

(a) Repair cracks or breaks in hydraulic oil filter housing by welding. Refer to TM 9-237 for welding applications.

(b) Repair bent or deformed hydraulic oil filter housing using accepted sheet metal practices.

(c) Replace hydraulic oil filter housing damaged beyond repair.

(5) Assembly

(a) Install new O-ring (13), pressure check valve (11), and protective cap (12) in hydraulic oil filter housing (2). Tighten pressure check valve (11) securely.

CAUTION

To prevent contamination of hydraulic oil, do not coat first two threads of any fitting with pipe sealant.

NOTE

Coat all fittings, elbows, adapters, and pipe plugs with Sealant, Loctite 592 or equivalent.

(b) Coat threads of oil sampling valve (10, Figure 2-192.1) with pipe sealant and install in hydraulic oil filter housing (3). Tighten oil sampling valve (10) securely.

(c) Install new hydraulic oil filter (8) with two new O-rings (9) in hydraulic oil filter housing (3).

(d) Coat threads of three capscrews (5) with Loctite 641 or equivalent.

(e) Position spring (7) and by-pass valve (6) on cover assembly (2). While depressing by-pass valve (6) and spring (7), install three capscrews (5).

(f) Install new O-ring (4) on cover assembly (2).

(g) Position cover assembly (2) on hydraulic oil filter housing (3).

(h) Depress cover assembly (2) and install four capscrews (1). Tighten capscrews (1) securely.

b. Hydraulic Oil Level Gauge

(1) Disassembly. No disassembly required.

(2) Cleaning. Refer to Section III.

WARNING

Avoid contact with alkaline paint and rust removers, phosphate coating compounds, 1,1,1,-Trichloroethane, and Dry Cleaning Solvent P-D-680. If solution comes in contact with skin, wash thoroughly with running water. Use of rubber gloves conforming to FED SPEC ZZ-G-381, face shield conforming to L-F-36, and other protective equipment is required according to OSHA Standards.

Adequate ventilation shall be provided while using solvents and cleaners. Prolonged breathing of vapors should be avoided. Do not use near heat or open flame. Avoid prolonged contact with skin. Use of rubber gloves conforming to FED SPEC ZZ-G-381, face shield conforming to L-F-36, and other protective equipment is required according to OSHA Standards.

When cleaning with compressed air, regulate to 25 psi maximum. Eyeshields must be worn to prevent injury to the eyes or complete loss of sight.

(a) Remove loose dirt with cloth or small brush.

(b) Hand clean hydraulic oil level gauge (14, Figure 2-50) using Dry Cleaning Solvent, FED SPEC P-D-680. Blow off excess solvent using compressed air 25 psi maximum.

(c) Paint hydraulic oil level gauge (14) according to TM 4750-15/1.

(3) Inspection. Inspect hydraulic oil level gauge (14) for cracked or broken sight glass and crossed, burred, or damaged threads.

(4) Repair

(a) Repair damaged threads according to TM 2350-45.

(b) Replace damaged hydraulic oil level gauge (14).

(5) Assembly. No assembly required.

2-190.2. HI-PRESSURE HYDRAULIC FILTER AND HEAD (LVSA1 SERIES VEHICLES ONLY). Refer to TM 2320-20/12 for disassembly, cleaning, inspecting, repair, and assembly of hi-pressure hydraulic filter and head.

2-191. HYDRAULIC OIL RESERVOIR

a. Disassembly. No disassembly required.

b. Cleaning. Refer to Section III.

WARNING

To prevent personal injury when steam cleaning, personnel shall wear proper protective equipment conforming to OSHA Standards.

Adequate ventilation shall be provided while using solvents and cleaners. Prolonged breathing of vapors should be avoided. Do not use near heat or open flame. Avoid prolonged contact with skin. Use of rubber gloves conforming to FED SPEC ZZ-G-381, face shield conforming to L-F-36, and other protective equipment is required according to OSHA Standards.

To prevent serious personal injury when abrasive blasting with high air pressure (120-150 psi), in open areas or confined areas, personnel shall wear full-body protective equipment conforming to OSHA Standards.

When cleaning with compressed air, regulate to 25 psi maximum. Eyeshields must be worn to prevent injury to the eyes or complete loss of sight.

(1) Steam clean hydraulic oil reservoir (5, Figure 2-51) to remove dirt and grease.

(2) Abrasive blast hydraulic oil reservoir (5) to remove paint, rust, and corrosion.

(3) Paint hydraulic oil reservoir (5) according to TM 4750-15/1.

c. Inspection

(1) Inspect hydraulic oil reservoir (5) for cracks and breaks.

(2) Inspect hydraulic oil reservoir (5) for dents, bends, and deformation.

(3) Inspect threaded areas for crossed, smashed, burred, and damaged threads.

d. Repair

(1) Repair cracks or breaks in hydraulic oil reservoir (5) by welding. Refer to TM 9-237 for welding applications.

(2) Repair bent, dented, or deformed hydraulic oil reservoir (5) using accepted sheet metal practices.

(3) Repair threaded areas according to TM 2350-45.

(4) Replace hydraulic oil reservoir (5) damaged beyond repair.

e. Assembly. No assembly required.

2-192. DIRECTIONAL RELIEF VALVE

a. Disassembly

CAUTION

To prevent parts damage, do not disturb adjusting screw (1, Figure 2-193) or nut (2).

(1) Unscrew cartridge (3) from directional relief valve body (4).

(2) Remove two O-rings (5 and 6) from cartridge (3). Discard O-rings (5 and 6).

NOTE

Perform step (3) on LVSA1 series vehicles only.

(3) Remove two O-rings (5 and 6) and backup ring (7). Discard O-rings (5 and 6) and backup ring (7).

b. Cleaning. Refer to Section III.

WARNING

Avoid contact with alkaline paint and rust removers, phosphate coating compounds, 1,1,1-Trichloroethane, and Dry Cleaning Solvent P-D-680. If solution comes in contact with the skin, wash thoroughly with running water. Use of rubber gloves conforming to FED SPEC ZZ-G-381, face shield conforming to L-F-36, and other protective equipment is required according to OSHA Standards.

Adequate ventilation shall be provided while using solvents and cleaners. Prolonged breathing of vapors should be avoided. Do not use near heat or open flame. Avoid prolonged contact with skin. Use of rubber gloves conforming to FED SPEC ZZ-G-381, face shield conforming to L-F-36, and other protective equipment is required according to OSHA Standards.

When cleaning with compressed air, regulate to 25 psi maximum. Eyeshields must be worn to prevent injury to the eyes or complete loss of sight.

(1) Remove loose dirt with cloth or small brush.

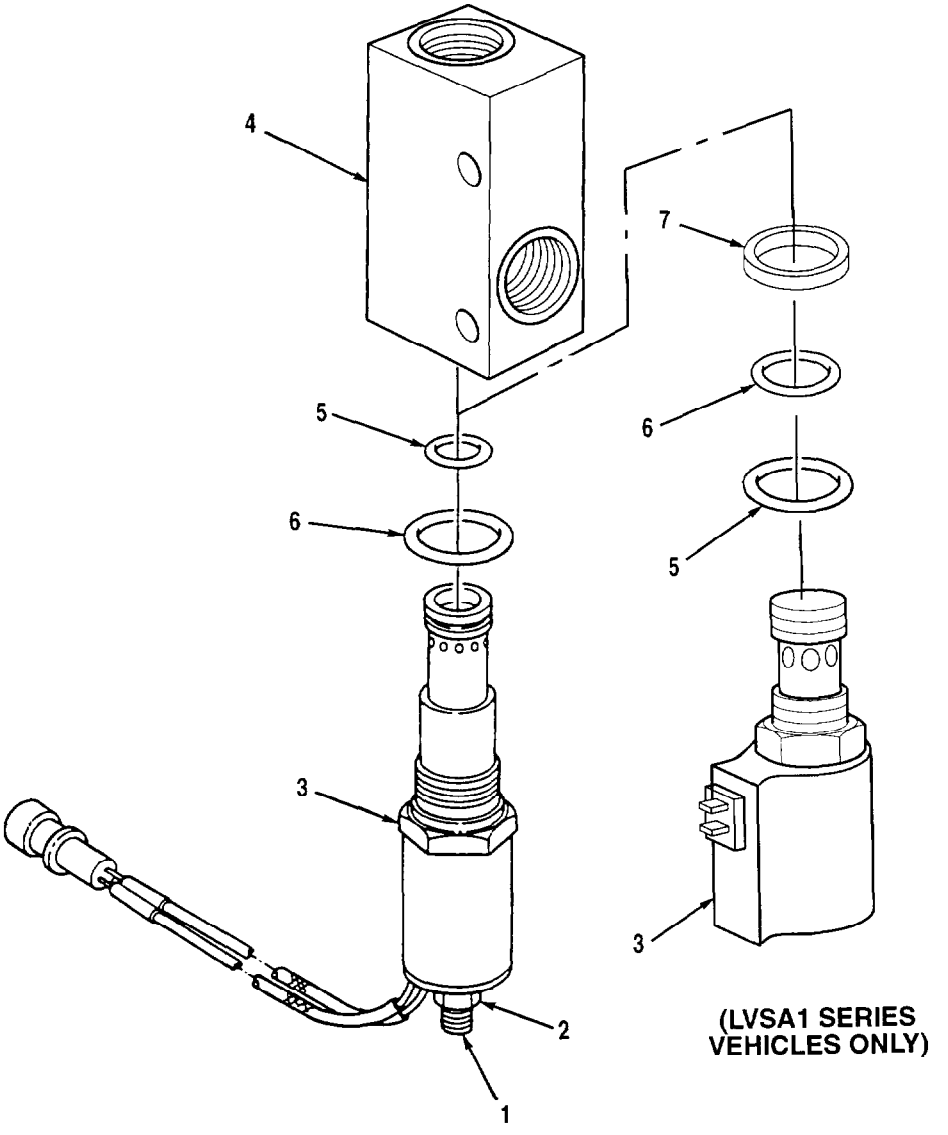

1. Adjusting Screw
2. Nut
3. Cartridge
4. Directional Relief Valve Body
5. O-Ring
6. O-Ring
7. Backup Ring*

* LVSA1 Series Vehicles Only

Figure 2-193. Directional Relief Valve Disassembly/Assembly

(2) Hand clean directional relief valve body using Dry Cleaning Solvent, FED SPEC P-D-680. Blow off excess solvent using compressed air 25 psi maximum.

(3) Paint directional relief valve body according to TM 4750-15/1.

c. Inspection

(1) Inspect directional relief valve body for cracks, breaks, and damage.

(2) Inspect directional relief valve body for crossed, smashed, burred, or damaged threads.

d. Repair

(1) Repair damaged threads according to TM 2350-45.

(2) Replace directional relief valve body damaged beyond repair.

e. Assembly

NOTE

Lubricate all new O-rings with clean oil conforming to MIL-L-2104 during assembly.

(1) Install new O-rings (5 and 6) on cartridge (3).

NOTE

Perform step (1.1) on LVSA1 series vehicles only.

(1.1) Install new backup ring (7) and two new O-rings (5 and 6) on cartridge (3).

(2) Install cartridge (3) in directional relief valve body (4). Tighten cartridge (3) securely.

2-193. STEERING SELECTOR VALVE AND SWITCH

a. Steering Selector Valve. Refer to TM 2320-34/13 for disassembly, cleaning, inspection, or repair, and assembly of steering selector valve (8, Figure 2-53).

b. Steering Selector Switch

(1) Disassembly. No disassembly required.

(2) Cleaning. Refer to Section III.

WARNING

Adequate ventilation shall be provided while using solvents and cleaners. Prolonged breathing of vapors should be avoided. Do not use near heat or open flame. Avoid prolonged contact with skin. Use of rubber gloves conforming to FED SPEC ZZ-G-381, face shield conforming to L-F-36, and other protective equipment is required according to OSHA Standards.

(a) Remove loose dirt with cloth or small brush.

(b) Hand clean steering selector switch (20) using Isopropyl Alcohol, FED SPEC TT-I-735.

(3) Inspection

(a) Inspect steering selector switch (20, Figure 2-53) for damage.

(b) Inspect steering selector switch (20) for proper function using a volt/ohm meter.

(c) Inspect steering selector switch (20) for damaged connectors.

(4) Repair. Replace steering selector switch (20) damaged beyond repair or failing inspection.

(5) Assembly. No assembly required.

2-194. TRANSMISSION OIL FILTER, ADAPTER, AND MOUNTING BRACKET

a. Transmission Oil Filter. Replace transmission oil filter (8, Figure 2-54) 100 percent.

b. Transmission Oil Filter Adapter

(1) Disassembly. No disassembly required.

(2) Cleaning. Refer to Section III.

WARNING

Avoid contact with alkaline paint and rust removers, phosphate coating compounds, 1,1,1-Trichloroethane, and Dry Cleaning Solvent P-D-680. If solution comes in contact with the skin, wash thoroughly with running water. Use of rubber gloves conforming to FED SPEC ZZ-G-381, face shield conforming to L-F-36, and other protective equipment is required according to OSHA Standards.

Adequate ventilation shall be provided while using solvents and cleaners. Prolonged breathing of vapors should be avoided. Do not use near heat or open flame. Avoid prolonged contact with skin. Use of rubber gloves conforming to FED SPEC ZZ-G-381, face shield conforming to L-F-36, and other protective equipment is required according to OSHA Standards.

When cleaning with compressed air, regulate to 25 psi maximum. Eyeshields must be worn to prevent injury to the eyes or complete loss of sight.

(a) Remove loose dirt with cloth or small brush.

(b) Hand clean transmission oil filter adapter (11) using Dry Cleaning Solvent, FED SPEC P-D-680. Blow off excess solvent using compressed air 25 psi maximum.

(c) Paint transmission oil filter adapter (11) according to TM 4750-15/1.

(3) Inspection

(1) Inspect transmission oil filter adapter (11) for cracks, breaks, and damage.

(2) Inspect transmission oil filter adapter (11) for crossed, smashed, burred, or damaged threads.

(4) Repair

(1) Repair damaged threads according to TM 2350-45.

(2) Replace transmission oil filter adapter (11) damaged beyond repair.

(5) Assembly. No assembly required.

c. Transmission Oil Filter Mounting Bracket

(1) Disassembly. No disassembly required.

(2) Cleaning. Refer to Section III.

WARNING

To prevent personal injury when steam cleaning, personnel shall wear proper protective equipment conforming to OSHA Standards.

Adequate ventilation shall be provided while using solvents and cleaners. Prolonged breathing of vapors should be avoided. Do not use near heat or open flame. Avoid prolonged contact with skin. Use of rubber gloves conforming to FED SPEC ZZ-G-381, face shield conforming to L-F-36, and other protective equipment is required according to OSHA Standards.

To prevent serious personal injury when abrasive blasting with high air pressure (120-150 psi), in open areas or confined areas, personnel shall wear full-body protective equipment conforming to OSHA Standards.

(a) Steam clean transmission oil filter mounting bracket (9, Figure 2-54) to remove dirt and grease.

(b) Abrasive blast transmission oil filter mounting bracket (9) to remove paint, rust, and corrosion.

(c) Paint transmission oil filter mounting bracket (9) according to TM 4750-15/1.

(3) Inspection

(a) Inspect transmission oil filter mounting bracket (9) for cracks and breaks.

(b) Inspect transmission oil filter mounting bracket (9) for dents, bends, and distortion.

(4) Repair

(a) Repair cracks or breaks in transmission oil filter mounting bracket (9) by welding. Refer to TM 9-237 for welding applications.

(b) Repair bent, dented, or deformed transmission oil filter mounting bracket (9) using accepted sheet metal practices.

(c) Replace transmission oil filter mounting bracket (9) damaged beyond repair.

(5) Assembly. No assembly required.

2-195. STEERING WHEEL

a. Disassembly. No further disassembly required.

b. Cleaning. Refer to Section III.

WARNING

Avoid contact with alkaline paint and rust removers, phosphate coating compounds, 1,1,1-Trichloroethane, and Dry Cleaning Solvent P-D-680. If solution comes in contact with the skin, wash thoroughly with running water. Use of rubber gloves conforming to FED SPEC ZZ-G-381, face shield conforming to L-F-36, and other protective equipment is required according to OSHA Standards.

Adequate ventilation shall be provided while using solvents and cleaners. Prolonged breathing of vapors should be avoided. Do not use near heat or open flame. Avoid prolonged contact with skin. Use of rubber gloves conforming to FED SPEC ZZ-G-381, face shield conforming to L-F-36, and other protective equipment is required according to OSHA Standards.

(1) Remove loose dirt with cloth or small brush.

(2) Hand clean steering wheel (8, Figure 2-55) and horn button (1) using Dry Cleaning Solvent, FED SPEC P-D-680. Wipe off excess solvent using dry cloth.

c. Inspection

(1) Inspect steering wheel (8) for cracks and breaks.

(2) Inspect horn parts for cracks, corrosion, deformation, and damage.

d. Repair. Replace steering wheel and horn parts failing inspection.

e. Assembly. No assembly required.

2-196. HEADLIGHT SHIELDS

a. Disassembly. No disassembly required.

b. Cleaning. Refer to Section III.

WARNING

To prevent personal injury when steam cleaning, personnel shall wear proper protective equipment conforming to OSHA Standards.

WARNING

Adequate ventilation shall be provided while using solvents and cleaners. Prolonged breathing of vapors should be avoided. Do not use near heat or open flame. Avoid prolonged contact with skin. Use of rubber gloves conforming to FED SPEC ZZ-G-381, face shield conforming to L-F-36, and other protective equipment is required according to OSHA Standards.

To prevent serious personal injury when abrasive blasting with high air pressure (120-150 psi), in open areas or confined areas, personnel shall wear full-body protective equipment conforming to OSHA Standards.

(1) Steam clean left and right headlight shields (2 and 8, Figure 2-56) to remove dirt and grease.

(2) Abrasive blast left and right headlight shields (2 and 8) to remove paint, rust, and corrosion.

(3) Paint left and right headlight shields (2 and 8) according to TM 4750-15/1.

c. Inspection

(1) Inspect left and right headlight shields (2 and 8) for cracks and breaks.

(2) Inspect left and right headlight shields (2 and 8) for dents, bends, and deformation.

d. Repair

(1) Repair cracks or breaks in left and right headlight shields (2 and 8) by welding or brazing. Refer to TM 9-237 for welding applications.

(2) Repair bent, dented, or deformed headlight shields using accepted sheet metal practices.

(3) Replace left and right headlight shields (2 and 8) damaged beyond repair.

e. Assembly. No assembly required.

2-197. TURN SIGNAL SWITCH AND FLASHER

a. Turn Signal Switch

(1) Disassembly. No disassembly required.

(2) Cleaning. Refer to Section III.

WARNING

Adequate ventilation shall be provided while using solvents and cleaners. Prolonged breathing of vapors should be avoided. Do not use near heat or open flame. Avoid prolonged contact with skin. Use of rubber gloves conforming to FED SPEC ZZ-G-381, face shield conforming to L-F-36, and other protective equipment is required according to OSHA Standards.

(a) Remove loose dirt with cloth or small brush.

(b) Hand clean turn signal switch (10, Figure 2-57) using Isopropyl Alcohol, FED SPEC TT-I-735. Allow tc air dry.

(3) Inspection

(a) Inspect turn signal switch (10) for damage.

(b) Inspect turn signal switch (10) for proper function using a volt/ohm meter.

(c) Inspect turn signal switch (10) for damaged connectors.

(d) Inspect turn signal switch (10) wiring for cracked or worn insulation, frays, and damage.

(4) Repair. Replace turn signal switch (10) damaged beyond repair or failing inspection.

(5) Assembly. No assembly required.

b. Flasher

(1) Disassembly. No disassembly required.

(2) Cleaning. Refer to Section III.

WARNING

Adequate ventilation shall be provided while using solvents and cleaners. Prolonged breathing of vapors should be avoided. Do not use near heat or open flame. Avoid prolonged contact with skin. Use of rubber gloves conforming to FED SPEC ZZ-G-381, face shield conforming to L-F-36, and other protective equipment is required according to OSHA Standards.

(a) Remove loose dirt with cloth.

(b) Hand clean flasher (8) using Isopropyl Alcohol, FED SPEC TT-I-735. Allow to air dry.

(3) Inspection

(a) Inspect flasher (8) for damage.

(b) Inspect flasher (8) for proper function using a volt/ohm meter.

(c) Inspect flasher 98) for damaged connectors.

(d) Inspect flasher (8) for cracked or worn insulation, frays, and damage.

(4) Repair. Replace flasher 98) damaged beyond repair or failing inspection.

(5) Assembly. No assembly required

2-197.1. TURN SIGNAL SWITCH AND FLASHER (LVSA1 SERIES VEHICLES ONLY. Refer to TM 2320-20/12 for disassembly, cleaning, inspecting, repair, and assembly of turn signal switch and flasher.

2-198. STEERING COLUMN

a. Disassembly

(1) Remove spacer (1, Figure 2-194) and upper spring seat (2) from housing (3).

(2) Remove dust cap (4), spring (5), and lower spring seat (6) from tube (7).

(3) Remove shaft (8) from tube (7).

CAUTION

To prevent damage to bearings (9 and 12), remove by pressing against outer bearing shell only.

NOTE

Inspect bearings (9 and 12) before removal. Refer to subparagraph c below.

(4) Remove bearing (9) from tube (7).

(5) Remove contact (10) from housing (3) and carefully pull wire (11) from tube (7).

(6) Remove tube (7) from housing (3).

(7) Remove bearing (12) from housing (3) using a press.

b. Cleaning. Refer to Section III.

WARNING

To prevent personal injury when steam cleaning, personnel shall wear proper protective equipment conforming to OSHA Standards.

Adequate ventilation shall be provided while using solvents and cleaners. Prolonged breathing of vapors should be avoided. Do not use near heat or open flame. Avoid prolonged contact with skin. Use of rubber gloves conforming to FED SPEC ZZ-G-381, face shield conforming to L-F-36, and other protective equipment is required according to OSHA Standards.

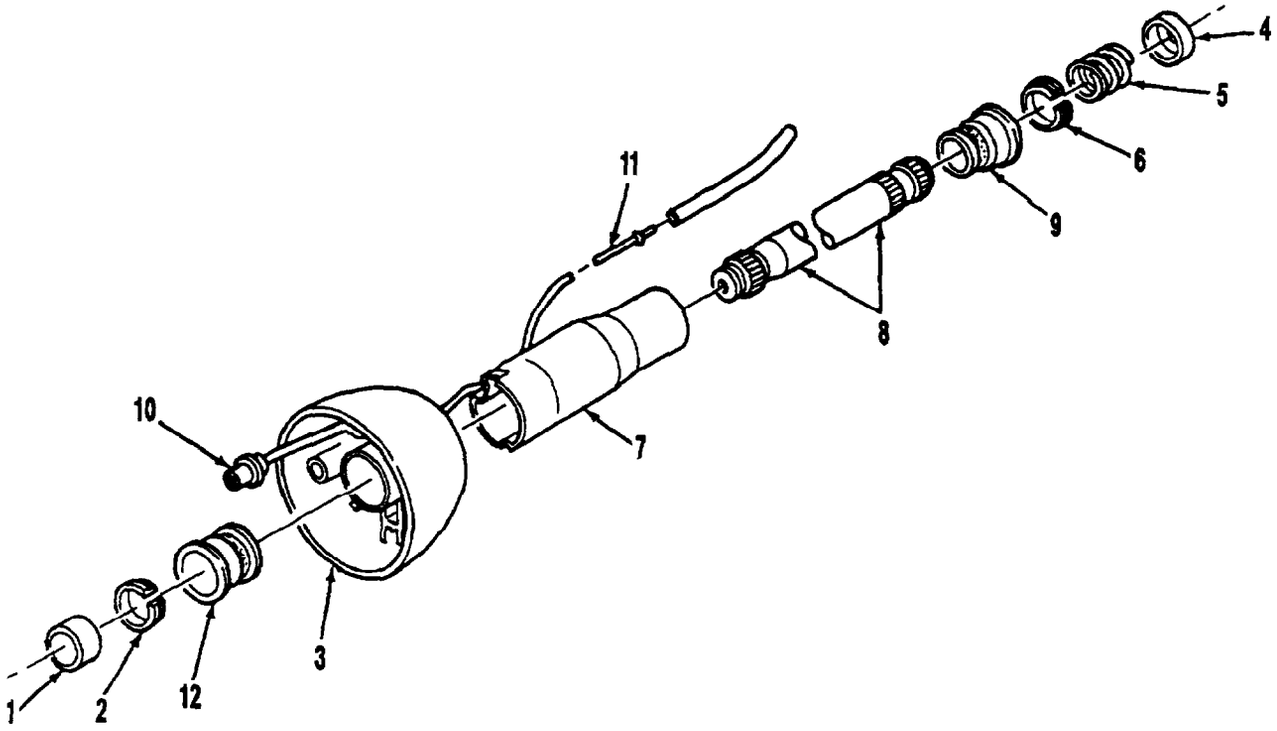

1. Spacer
2. Upper Spring Seat
3. Housing
4. Dust Cap
5. Spring
6. Lower Spring Seat
7. Tube
8. Shaft
9. Bearing
10. Contact
11. Wire
12. Bearing

Figure 2-194. Steering Column Disassembly/Assembly

WARNING

Avoid contact with alkaline paint and rust removers, phosphate coating compounds, 1,1,1-Trichloroethane, and Dry Cleaning Solvent P-D-680. If solution comes in contact with the skin, wash thoroughly with running water. Use of rubber gloves conforming to FED SPEC ZZ-G-381, face shield conforming to L-F-36, and other protective equipment is required according to OSHA Standards.

To prevent serious personal injury when abrasive blasting with high air pressure (120-150 psi), in open areas or confined areas, personnel shall wear full-body protective equipment conforming to OSHA Standards.

When cleaning with compressed air, regulate to 25 psi maximum. Eyeshields must be worn to prevent injury to the eyes or complete loss of sight.

(1) Steam clean steering column housing and tube to remove dirt and grease.

(2) Wipe wire using cloth dampened with Isopropyl Alcohol, FED SPEC TT-I-735 to remove dirt or grease.

(3) Solvent clean other steering column parts using Dry Cleaning Solvent, FED SPEC P-D-680. Use a small brush, if needed, to aid in cleaning. Blow off excess dry cleaning solvent using compressed air 25 psi maximum.

(4) Abrasive blast steering column housing and tube to remove paint, rust, and corrosion.

(5) Paint steering column housing and tube according to TM 4750-15/1.

c. Inspection

(1) Inspect steering column housing and tube for dents, bends, and deformation.

(2) Inspect wire for breaks, frays, bare spots, and deterioration.

(3) Inspect bearings before removal for pits, corrosion, roughness, and damage.

(4) Inspect threaded areas for crossed, smashed, burred, or damaged threads.

(5) Inspect splines on shaft for burs, rolling, peening, and flat spots.

d. Repair

(1) Repair damaged threads according to TM 2350-45.

(2) Replace wire (11) if broken, frayed, bare, or deteriorated.

NOTE

If bearings are removed from tube for any reason, replace old bearings with new ones.

(3) Replace bearings if pitted, corroded, rough, or damaged.

(4) Replace shaft if splines are burred, rolled, peened, or have flat spots.

(5) Replace other steering column parts damaged beyond repair or failing inspection.

e. Assembly

CAUTION

To prevent damage to bearings (9 and 12) during installation, press only against the outer bearing shell.

(1) Install bearing (12) in housing (3) using a press.

(2) Install housing (3) on tube (7) and bend retainer tabs.

(3) Install contact (10) by feeding wire (11) through housing (3) and tube (7).

(4) Push contact (10) firmly in housing (3).

(5) Install bearing (9) in tube (7) pressing on outer bearing shell only.

(6) Lightly coat shaft (8) with grease conforming to MIL-G-23549.

(7) Install shaft (8) through tube (7) and housing (3).

(8) Install lower spring seat (6) in tube (7).

(9) Install spring (5) and dust cap (4) in tube (7).

(10) Install upper spring seat (2) and spacer (1) over shaft (8).

2-199. UNIVERSAL JOINT AND STEERING LINKAGE

a. Universal Joint. Replace damaged or defective universal joints (8, Figure 2-59).

b. Steering Linkage

(1) Disassembly. No disassembly required.

(2) Cleaning. Refer to Section III.

WARNING

To prevent personal injury when steam cleaning, personnel shall wear proper protective equipment conforming to OSHA Standards.

WARNING

Adequate ventilation shall be provided while using solvents and cleaners. Prolonged breathing of vapors should be avoided. Do not use near heat or open flame. Avoid prolonged contact with skin. Use of rubber gloves conforming to FED SPEC ZZ-G-381, face shield conforming to L-F-36, and other protective equipment is required according to OSHA Standards.

To prevent serious personal injury when abrasive blasting with high air pressure (120-150 psi), in open areas or confined areas, personnel shall wear full-body protective equipment conforming to OSHA Standards.

When cleaning with compressed air, regulate to 25 psi maximum. Eyeshields must be worn to prevent injury to the eyes or complete loss of sight.

(a) Steam clean steering linkage (14, Figure 2-59) to remove dirt and grease.

(b) Abrasive blast steering linkage (14) to remove paint, rust, and corrosion.

(c) Paint hydraulic steering linkage (14) according to TM 4750-15/1.

(3) Inspection

(a) Inspect end yokes (3) and linkage (14) for trueness, cracks, peening, or burs.

(b) Inspect carrier bearing (13) for binding.

(c) Inspect universal-joints (8) for play at bearing caps, binding, and cracks.

(d) Inspect threaded areas for crossed, smashed, burred, and damaged threads.

(4) Repair

(a) Repair threaded areas according to TM 2350-45.

(b) Replace steering linkage (14) damaged beyond repair or failing inspection.

(c) Replace other steering linkage (14) components damaged beyond repair or failing inspection.

(5) Assembly. No assembly required.

2-200. CAB 90° GEAR BOX. Refer to TM 2320-34/13 for disassembly, cleaning, inspection, repair, and assembly of cab 90° gear box (4, Figure 2-60).

2-201. STOP LIGHT SWITCHES

a. Disassembly. No disassembly required.

b. Cleaning. Refer to Section III.

WARNING

Adequate ventilation shall be provided while using solvents and cleaners. Prolonged breathing of vapors should be avoided. Do not use near heat or open flame. Avoid prolonged contact with skin. Use of rubber gloves conforming to FED SPEC ZZ-G-381, face shield conforming to L-F-36, and other protective equipment is required according to OSHA Standards.

(1) Remove loose dirt with cloth or small brush.

(2) Hand clean stop light switch (1, 2, 3, or 4, Figure 2-61) using Isopropyl Alcohol, FED SPEC TT-I-735. Allow to air dry.

c. Inspection. Inspect stop light switch (1, 2, 3, or 4) for cracks, breaks, damage, and function. Use a volt/ohm meter to check function.

d. Repair. Replace stop light switch (1, 2, 3, or 4) damaged beyond repair or failing inspection.

e. Assembly. No assembly required.

2-202. LOW AIR PRESSURE SWITCHES

a. Disassembly. No disassembly required.

b. Cleaning. Refer to Section III.

WARNING

Adequate ventilation shall be provided while using solvents and cleaners. Prolonged breathing of vapors should be avoided. Do not use near heat or open flame. Avoid prolonged contact with skin. Use of rubber gloves conforming to FED SPEC ZZ-G-381, face shield conforming to L-F-36, and other protective equipment is required according to OSHA Standards.

(1) Remove loose dirt with cloth or small brush.

(2) Hand clean low air pressure switch (2, Figure 2-62) using Isopropyl Alcohol, FED SPEC TT-I-735. Allow to air dry.

c. Inspection. Inspect low air pressure switch (2) for cracks, breaks, damage, and function. Use a volt/ohm meter to check function.

d. Repair. Replace low air pressure switch (2) damaged beyond repair or failing inspection.

e. Assembly. No assembly required.

2-203. BRAKE TREADLE VALVE. Refer to TM 2320-34/13 for disassembly, cleaning, inspection, repair, and assembly of brake treadle valve (10, Figure 2-63).

2-204. THROTTLE TREADLE VALVE. Refer to TM 2320-34/13 for disassembly, cleaning, inspection, repair, and assembly of throttle treadle valve (4, Figure 2-64).

2-205. INSTRUMENT PANEL AIR MANIFOLDS

a. Left Instrument Panel Air Manifold

(1) Disassembly. No disassembly required.

(2) Cleaning. Refer to section III.

WARNING

Dry cleaning solvents are flammable. Do not clean parts near an open flame or in a smoking area. Contact with skin may cause irritation or cracking. Use of rubber gloves conforming to FED SPEC ZZ-G-381, face shield conforming to L-F-36, and and other protective equipment is required according to OSHA Standards.

Avoid contact with alkaline paint and rust removers, phosphate coating compounds, 1,1,1-Trichloroethane, and Dry Cleaning Solvent P-D-680. If solution comes in contact with the skin, wash thoroughly with running water. Use of rubber gloves conforming to FED SPEC ZZ-G-381, face shield conforming to L-F-36, and other protective equipment is required according to OSHA Standards.

Adequate ventilation shall be provided while using solvents and cleaners. Prolonged breathing of vapors should be avoided. Do not use near heat or open flame. Avoid prolonged contact with skin. Use of rubber gloves conforming to FED SPEC ZZ-G-381, face shield conforming to L-F-36, and other protective equipment is required according to OSHA Standards.

When cleaning with compressed air, regulate to 25 psi maximum. Eyeshields must be worn to prevent injury to the eyes or complete loss of sight.

(a) Degrease left instrument panel air manifold (8, Figure 2-65, Sheet 1 of 2) in a vapor degreaser conforming to MIL-D-45950 to remove dirt and grease. Use 1,1,1-Trichloroethane, Tech, FED SPEC O-T-620, Type I as the solvent.

(b) Alkaline clean left instrument panel air manifold (8) according to MIL-C-46156. Rinse thoroughly with hot water. Blow off excess water using compressed air 25 psi maximum.

(3) Inspection

(a) Inspect left instrument panel air manifold (8) for cracks, breaks, and damage.

(b) Inspect left instrument panel air manifold (8) for crossed, smashed, burred, and damaged threads.

(4) Repair

(a) Repair damaged threads according to TM 2350-45.

(b) Replace left instrument panel air manifold (8) damaged beyond repair or failing inspection.

(5) Assembly. No assembly required.

b. Right Instrument Panel Air Manifold

(1) Disassembly. No disassembly required.

(2) Cleaning. Refer to section III.

WARNING

Dry cleaning solvents are flammable. Do not clean parts near an open flame or in a smoking area. Contact with skin may cause irritation or cracking. Use of rubber gloves conforming to FED SPEC ZZ-G-381, face shield conforming to L-F-36, and other protective equipment is required according to OSHA Standards.

Avoid contact with alkaline paint and rust removers, phosphate coating compounds, 1,1,1-Trichloroethane, and Dry Cleaning Solvent P-D-680. If solution comes in contact with skin, wash thoroughly with running water. Use of rubber gloves conforming to FED SPEC ZZ-G-381, face shield conforming to L-F-36, and other protective equipment is required according to OSHA Standards.

Adequate ventilation shall be provided while using solvents and cleaners. Prolonged breathing of vapors should be avoided. Do not use near heat or open flame. Avoid prolonged contact with skin. Use of rubber gloves conforming to FED SPEC ZZ-G-381, face shield conforming to L-F-36, and other protective equipment is required according to OSHA Standards.

When cleaning with compressed air, regulate to 25 psi maximum. Eyeshields must be worn to prevent injury to the eyes or complete loss of sight.

(a) Degrease right instrument panel air manifold (23, Figure 2-65, Sheet 2 of 2) in a vapor degreaser conforming to MIL-D-45950 to remove dirt and grease. Use 1,1,1-Trichloroethane, Tech, FED SPEC O-T-620, Type I as the solvent.

(b) Alkaline clean right instrument panel air manifold (23) according to MIL-C-46156. Rinse thoroughly with hot water. Blow off excess water using compressed air 25 psi maximum.

(3) Inspection

(a) Inspect right instrument panel air manifold (23) for cracks, breaks, and damage.

(b) Inspect right instrument panel air manifold (23) for crossed, smashed, burred, and damaged threads.

(4) Repair

(a) Repair damaged threads according to TM 2350-45.

(b) Replace right instrument panel air manifold (23) damaged beyond repair or failing inspection.

(5) Assembly. No assembly required.

2-206. MAIN AIR MANIFOLD

a. Disassembly. No disassembly required.

b. Cleaning. Refer to Section III.

WARNING

Dry cleaning solvents are flammable. Do not clean parts near an open flame or in a smoking area. Contact with skin may cause irritation or cracking. Use of rubber gloves conforming to FED SPEC ZZ-G-381, face shield conforming to L-F-36, and other protective equipment is required according to OSHA Standards.

Avoid contact with alkaline paint and rust removers, phosphate coating compounds, 1,1,1-Trichloroethane, and Dry Cleaning Solvent P-D-680. If solution comes in contact with skin, wash thoroughly with running water. Use of rubber gloves conforming to FED SPEC ZZ-G-381, face shield conforming to L-F-36, and other protective equipment is required according to OSHA Standards.

Adequate ventilation shall be provided while using solvents and cleaners. Prolonged breathing of vapors should be avoided. Do not use near heat or open flame. Avoid prolonged contact with skin. Use of rubber gloves conforming to FED SPEC ZZ-G-381, face shield conforming to L-F-36, and other protective equipment is required according to OSHA Standards.

When cleaning with compressed air, regulate to 25 psi maximum. Eyeshields must be worn to prevent injury to the eyes or complete loss of sight.

(1) Degrease main air manifold (9, Figure 2-66) in a vapor degreaser conforming to MIL-D-45950 to remove dirt and grease. Use 1,1,1-Trichloroethane, Tech, FED SPEC O-T-620, Type I as the solvent.

(2) Alkaline clean main air manifold (9) according to MIL-C-46156. Rinse thoroughly with hot water. Blow off excess water using compressed air 25 psi maximum.

c. Inspection

(1) Inspect main air manifold (9) for cracks, breaks, and damage.

(2) Inspect main air manifold (9) for crossed, smashed, burred, and damaged threads.

d. Repair

(1) Repair damaged threads according to TM 2350-45.

(2) Replace main air manifold (9) damaged beyond repair or failing inspection.

e. Assembly. No assembly required.

2-207. HEADLIGHT ASSEMBLY

a. Disassembly

(1) Remove three screws (5, Figure 2-67) and bezel ring (6) from headlight housing (10).

(2) Hold headlight (11) and move it out from adjusting ring (18) far enough to allow easy access to wires (7, 8, and 9).

(3) Tag and disconnect three wires (7, 8, and 9) from headlight housing (10).

(4) Remove headlight (11) from adjusting ring (18).

(5) Carefully pull spring (16) forward and out of retaining hole (17).

(6) Remove adjusting ring (18) from headlight housing (10).

(7) Remove three nuts (19), lockwashers (20), washers (21), and rubber mounts (28) from headlight housing (10). Discard lockwashers (20).

b. Cleaning. Refer to Section III.

WARNING

Dry cleaning solvents are flammable. Do not clean parts near an open flame or in a smoking area. Contact with skin may cause irritation or cracking. Use of rubber gloves conforming to FED SPEC ZZ-G-381, face shield conforming to L-F-36, and other protective equipment is required according to OSHA Standards.

Avoid contact with alkaline paint and rust removers, phosphate coating compounds, 1,1,1-Trichloroethane, and Dry Cleaning Solvent P-D-680. If solution comes in contact with skin, wash thoroughly with running water. Use of rubber gloves conforming to FED SPEC ZZ-G-381, face shield conforming to L-F-36, and other protective equipment is required according to OSHA Standards.

WARNING

Adequate ventilation shall be provided while using solvents and cleaners. Prolonged breathing of vapors should be avoided. Do not use near heat or open flame. Avoid prolonged contact with skin. Use of rubber gloves conforming to FED SPEC ZZ-G-381, face shield conforming to L-F-36, and other protective equipment is required according to OSHA Standards.

When cleaning with compressed air, regulate to 25 psi maximum. Eyeshields must be worn to prevent injury to the eyes or complete loss of sight.

(1) Degrease metal headlight parts in a vapor degreaser conforming to MIL-D-45950 to remove dirt and grease. Use 1,1,1-Trichloroethane, Tech, FED SPEC O-T-620, Type I as the solvent.

(2) Alkaline clean metal headlight parts according to MIL-C-46156 to remove paint, rust, and corrosion. Rinse metal headlight parts thoroughly with hot water. Blow off excess water using compressed air 25 psi maximum.

(3) Clean headlight (11, Figure 2-67) using cloth dampened with Glass Cleaner, Regular, Type I, Class I, NSN 7930-00-664-6910 or equivalent.

(4) Clean rubber mounts (28) by wiping off loose dirt and grease using a cloth dampened with Dry Cleaning Solvent, FED SPEC P-D-680.

c. Inspection

(1) Inspect metal headlight parts for cracks, breaks, deformation, and damage.

(2) Inspect wires (7, 8, and 9) for breaks, frays, and bare spots.

(3) Inspect headlight (11) for cracks and breaks.

(4) Inspect rubber mounts (28) for dry rot, weather checking, and damage.

(5) Inspect threaded areas for crossed, smashed, burred, and damaged threads.

d. Repair. Replace headlight parts failing inspection.

e. Assembly

(1) Install three rubber mounts (28), washers (21), new lockwashers (20), and nuts (19) in headlight housing (10). Tighten nuts (19) securely.

(2) Install adjusting ring (18) on headlight housing (10).

(3) Install spring (16) in retaining hole (17).

(4) Install headlight (11) in adjusting ring (18).

(5) Hold headlight (11) out from adjusting ring (18) far enough to allow easy access to wires (7, 8, and 9) and connect three wires (7, 8, and 9) to headlight housing (10).

(6) Install bezel ring (6, Figure 2-67) and three screws (5) on headlight housing (10). Tighten screws (5) securely.

2-208. COMPOSITE LIGHTS

a. Disassembly

(1) Loosen five screws (5, Figure 2-68), remove light door (6) and gasket (7). Discard gasket (7).

(2) Remove parking lamp (8), signal lamp (9), and blackout marker lamp (10) from composite light body (11).

b. Cleaning. Refer to Section III.

WARNING

Dry cleaning solvents are flammable. Do not clean parts near an open flame or in a smoking area. Contact with skin may cause irritation or cracking. Use of rubber gloves conforming to FED SPEC ZZ-G-381, face shield conforming to L-F-36, and other protective equipment is required according to OSHA Standards.

Adequate ventilation shall be provided while using solvents and cleaners. Prolonged breathing of vapors should be avoided. Do not use near heat or open flame. Avoid prolonged contact with skin. Use of rubber gloves conforming to FED SPEC ZZ-G-381, face shield conforming to L-F-36, and other protective equipment is required according to OSHA Standards.

(1) Use a cloth dampened with Dry Cleaning Solvent, FED SPEC P-D-680 and a small wire brush to clean metal parts of composite light.

(2) Use a cloth dampened with Isopropyl Alcohol, FED SPEC TT-I-735 and small wire brush to clean nonmetal parts of composite light.

c. Inspection

(1) Inspect light door (6, Figure 2-68) for cracks, broken or scratched lens, or leaks around light door (6) gasket.

(2) Inspect wiring for weather cracks, breaks, frays, and bare spots.

(3) Inspect lamp sockets for corrosion, deformation, and damage.

(4) Inspect light door (6) fit and tightness of gasket (7).

d. Repair. Replace composite light parts damaged beyond repair or failing inspection.

e. Assembly

(1) Coat interior of lamp socket with anti-corrosion conductive compound conforming to MIL-S-8660 and install parking lamp (8, Figure 2-68), signal lamp (9), and blackout marker lamp (10) in composite light body (11). Ensure lamps are properly installed and locked in sockets.

(2) Install new gasket (7), light door (6), and five screws (5) on composite light body (11). Tighten five screws (5) securely.

2-209. CLEARANCE LIGHT MOUNTING BRACKET AND CLEARANCE LIGHTS

a. Clearance Light Mounting Bracket

(1) Disassembly. No disassembly required.

(2) Cleaning. Refer to Section III.

WARNING

To prevent personal injury when steam cleaning, personnel shall wear proper protective equipment conforming to OSHA Standards.

To prevent serious personal injury when abrasive blasting with high air pressure (120-150 psi), in open areas and confined areas, personnel shall wear full-body protective equipment conforming to OSHA Standards.

Adequate ventilation shall be provided while using solvents and cleaners. Prolonged breathing of vapors should be avoided. Do not use near heat or open flame. Avoid prolonged contact with skin. Use of rubber gloves conforming to FED SPEC ZZ-G-381, face shield conforming to L-F-36, and other protective equipment is required according to OSHA Standards.

(a) Steam clean clearance light mounting bracket (1, Figure 2-69) to remove dirt and grease.

(b) Abrasive blast clearance light mounting bracket (1) to remove paint, rust, and corrosion.

(c) Paint clearance light mounting bracket (1) according to TM 4750-15/1.

(3) Inspection. Inspect clearance light mounting bracket (1) for cracks, dents, and deformation.

(4) Repair

(a) Straighten deformed or dented areas using accepted sheet metal practices.

(b) Repair cracks by welding. Refer to TM 9-237 for welding applications.

(5) Assembly. No assembly required.

b. Clearance Lights

(1) Disassembly. No disassembly required.

(2) Cleaning. Refer to Section III.

WARNING

Dry cleaning solvents are flammable. Do not clean parts near an open flame or in a smoking area. Contact with skin may cause irritation or cracking. Use of rubber gloves conforming to FED SPEC ZZ-G-381, face shield conforming to L-F-36, and other protective equipment is required according to OSHA Standards.

Adequate ventilation shall be provided while using solvents and cleaners. Prolonged breathing of vapors should be avoided. Do not use near heat or open flame. Avoid prolonged contact with skin. Use of rubber gloves conforming to FED SPEC ZZ-G-381, face shield conforming to L-F-36, and other protective equipment is required according to OSHA Standards.

(a) Use a cloth dampened with Dry Cleaning Solvent, FED SPEC P-D-680 and a small wire brush to clean metal parts of clearance light.

(b) Use a cloth dampened with Isopropyl Alcohol, FED SPEC TT-I-735 and a small wire brush to clean nonmetal parts of clearance light.

(c) Wash lens with water and detergent conforming to MIL-D-16791. Rinse lens thoroughly and allow to air dry.

(3) Inspection

(a) Inspect metal parts of clearance light for cracks, breaks, and corrosion.

(b) Inspect wiring for weather checks, cracks, frays, and bare spots.

(c) Inspect lens for scratches, nicks, cracks, and damage.

(d) Inspect threaded areas for crossed, smashed, burred, and damaged threads.

(4) Repair. Replace clearance light parts failing inspection.

(5) Assembly. No assembly required.

2-210. REFLECTORS

a. Disassembly. No disassembly required.

b. Cleaning. Refer to Section III.

WARNING

Dry cleaning solvents are flammable. Do not clean parts near an open flame or in a smoking area. Contact with skin may cause irritation or cracking. Use of rubber gloves conforming to FED SPEC ZZ-G-381, face shield conforming to L-F-36, and other protective equipment is required according to OSHA Standards.

WARNING

Avoid contact with alkaline paint and rust removers, phosphate coating compounds, 1,1,1-Trichloroethane, and Dry Cleaning Solvent P-D-680. If solution comes in contact with skin, wash thoroughly with running water. Use of rubber gloves conforming to FED SPEC ZZ-G-381, face shield conforming to L-F-36, and other protective equipment is required according to OSHA Standards.

Adequate ventilation shall be provided while using solvents and cleaners. Prolonged breathing of vapors should be avoided. Do not use near heat or open flame. Avoid prolonged contact with skin. Use of rubber gloves conforming to FED SPEC ZZ-G-381, face shield conforming to L-F-36, and other protective equipment is required according to OSHA Standards.

(1) Use a cloth dampened with Dry Cleaning Solvent, FED SPEC P-D-680 and a small wire brush to clean metal parts of reflector (2, Figure 2-70).

(2) Use a cloth dampened with Isopropyl Alcohol, FED SPEC TT-I-735 and a small wire brush to clean nonmetal parts of reflector (2).

(3) Wash lens with water and detergent conforming to MIL-D-16791. Rinse lens thoroughly and allow to air dry.

c. Inspection

(1) Inspect metal parts of reflector (2) for cracks, breaks, and deformation.

(2) Inspect lens for scratches, nicks, cracks, and damage.

d. Repair. Replace reflector (2) failing inspection.

e. Assembly. No assembly required.

2-211. CAB STEPS

a. Disassembly. No disassembly required.

b. Cleaning. Refer to section III.

WARNING

To prevent personal injury when steam cleaning, personnel shall wear proper protective equipment conforming to OSHA Standards.

To prevent serious personal injury when abrasive blasting with high air pressure (120-150 psi), in open areas and confined areas, personnel shall wear full-body protective equipment conforming to OSHA Standards.

WARNING

Adequate ventilation shall be provided while using solvents and cleaners. Prolonged breathing of vapors should be avoided. Do not use near heat or open flame. Avoid prolonged contact with skin. Use of rubber gloves conforming to FED SPEC ZZ-G-381, face shield conforming to L-F-36, and other protective equipment is required according to OSHA Standards.

(1) Steam clean cab steps (4, Figure 2-71) to remove dirt and grease.

(2) Abrasive blast cab steps (4) to remove paint, rust, and corrosion.

(3) Paint cab steps (4) according to TM 4750/15-1.

c. Inspection. Inspect cab steps (4) for deformation, cracks, and broken welds.

d. Repair

(1) Straighten deformed or dented areas using accepted sheet metal practices.

(2) Repair cracks and broken welds by welding. Refer to TM 9-237.

(3) Replace cab steps (4) damaged beyond repair.

e. Assembly. No assembly required.

2-212. TRANSMISSION SHIFT CABLE

a. Disassembly. No disassembly required.

b. Cleaning. Refer to Section III.

WARNING

Dry cleaning solvents are flammable. Do not clean parts near an open flame or in a smoking area. Contact with skin may cause irritation or cracking. Use of rubber gloves conforming to FED SPEC ZZ-G-381, face shield conforming to L-F-36, and other protective equipment is required according to OSHA Standards.

Avoid contact with alkaline paint and rust removers, phosphate coating compounds, 1,1,1-Trichloroethane, and Dry Cleaning Solvent P-D-680. If solution comes in contact with skin, wash thoroughly with running water. Use of rubber gloves conforming to FED SPEC ZZ-G-381, face shield conforming to L-F-36, and other protective equipment is required according to OSHA Standards.

Adequate ventilation shall be provided while using solvents and cleaners. Prolonged breathing of vapors should be avoided. Do not use near heat or open flame. Avoid prolonged contact with skin. Use of rubber gloves conforming to FED SPEC ZZ-G-381, face shield conforming to L-F-36, and other protective equipment is required according to OSHA Standards.

(1) Remove loose dirt with cloth or small brush.

(2) Clean transmission shift cable (6, Figure 2-72) using a cloth dampened with Dry Cleaning Solvent, P-D-680. A small brush may be used to aid in cleaning.

(3) Clean rubber parts using water and detergent conforming to MIL-D-16791. Rinse rubber parts thoroughly and allow to air dry.

c. Inspection

(1) Inspect transmission shift cable (6) for frays, broken strands, and worn areas.

(2) Inspect transmission shift cable (6) housing for kinks, breaks, and damage.

(3) Inspect transmission shift cable (6) for smooth operation in transmission shift cable (6) housing. Transmission shift cable (6) shall move freely.

(4) Inspect threaded areas for crossed, burred, smashed, and damaged threads.

(5) Inspect rubber parts for weather checks, holes, and deterioration.

d. Repair

(1) Repair damaged threads according to TM 2350-45.

(2) Replace transmission shift cable (6) failing inspection.

e. Assembly. No assembly required.

2-213. TRANSFER CASE SHIFT CABLE

a. Disassembly. No assembly required.

b. Cleaning. Refer to Section III.

WARNING

Dry cleaning solvents are flammable. Do not clean parts near an open flame or in a smoking area. Contact with skin may cause irritation or cracking. Use of rubber gloves conforming to FED SPEC ZZ-G-381, face shield conforming to L-F-36, and other protective equipment is required according to OSHA Standards.

Adequate ventilation shall be provided while using solvents and cleaners. Prolonged breathing of vapors should be avoided. Do not use near heat or open flame. Avoid prolonged contact with skin. Use of rubber gloves conforming to FED SPEC ZZ-G-381, face shield conforming to L-F-36, and other protective equipment is required according to OSHA Standards.

(1) Remove loose dirt with cloth or small brush.

(2) Clean transfer case shift cable (6, Figure 2-73) using a cloth dampened with Dry Cleaning Solvent, P-D-680. A small brush may be used to aid in cleaning.

c. Inspection

(1) Inspect transfer case shift cable (6) for frays, broken strands, and worn areas.

(2) Inspect transfer case shift cable (6) housing for kinks, breaks, and damage.

(3) Inspect transfer case shift cable (6) for smooth operation in transfer case shift cable (6) housing. Transfer case shift cable (6) shall move freely.

(4) Inspect threaded areas for crossed, burred, smashed, and damaged threads.

d. Repair

(1) Repair damaged threads according to TM 2350-45.

(2) Replace transfer case shift cable (6) failing inspection.

e. Assembly. No assembly required.

2-214. HEATER CONTROL VALVE CABLE

a. Disassembly. No assembly required.

b. Cleaning. Refer to Section III.

WARNING

Dry cleaning solvents are flammable. Do not clean parts near an open flame or in a smoking area. Contact with skin may cause irritation or cracking. Use of rubber gloves conforming to FED SPEC ZZ-G-381, face shield conforming to L-F-36, and other protective equipment is required according to OSHA Standards.

Adequate ventilation shall be provided while using solvents and cleaners. Prolonged breathing of vapors should be avoided. Do not use near heat or open flame. Avoid prolonged contact with skin. Use of rubber gloves conforming to FED SPEC ZZ-G-381, face shield conforming to L-F-36, and other protective equipment is required according to OSHA Standards.

(1) Remove loose dirt with cloth or small brush.

(2) Clean heater control valve cable (3, Figure 2-74) using a cloth dampened with Dry Cleaning Solvent, P-D-680. A small brush may be used to aid in cleaning.

c. Inspection

(1) Inspect heater control valve cable (3) for kinks, breaks, and worn areas.

(2) Inspect heater control valve cable (3) housing for kinks, breaks, and worn or damaged areas.

(3) Inspect heater control valve cable (3) for smooth operation in heater control valve cable (3) housing. Heater control valve cable (3) shall move freely.

d. Repair. Replace heater control valve cable (3) failing inspection.

e. Assembly. No assembly required.

2-215. HEATER HOSES AND FITTINGS

a. Heater Hoses. Replace deteriorated, damaged, and weather checked heater hoses.

b. Fittings

(1) Disassembly. No disassembly required.

(2) Cleaning. Refer to Section III.

WARNING

Dry cleaning solvents are flammable. Do not clean parts near an open flame or in a smoking area. Contact with skin may cause irritation or cracking. Use of rubber gloves conforming to FED SPEC ZZ-G-381, face shield conforming to L-F-36, and other protective equipment is required according to OSHA Standards.

Avoid contact with alkaline paint and rust removers, phosphate coating compounds, 1,1,1-Trichloroethane, and Dry Cleaning Solvent P-D-680. If solution comes in contact with skin, wash thoroughly with running water. Use of rubber gloves conforming to FED SPEC ZZ-G-381, face shield conforming to L-F-36, and other protective equipment is required according to OSHA Standards.

Adequate ventilation shall be provided while using solvents and cleaners. Prolonged breathing of vapors should be avoided. Do not use near heat or open flame. Avoid prolonged contact with skin. Use of rubber gloves conforming to FED SPEC ZZ-G-381, face shield conforming to L-F-36, and other protective equipment is required according to OSHA Standards.

When cleaning with compressed air, regulate to 25 psi maximum. Eyeshields must be worn to prevent injury to the eyes or complete loss of sight.

(a) Degrease fittings in a vapor degreaser conforming to MIL-D-45950 to remove dirt and grease. Use 1,1,1-Trichloroethane, Tech, FED SPEC O-T-620, Type I as the solvent.

(b) Alkaline clean fittings according to MIL-C-46156. Rinse thoroughly with hot water. Blow off excess water using compressed air 25 psi maximum.

(3) Inspection

(a) Inspect fittings for cracks, breaks, blocked passages, and damage.

(b) Inspect fittings for crossed, smashed, burred, and damaged threads.

(4) Repair

(a) Blow out passages using compressed air 25 psi maximum.

(b) Replace fittings damaged beyond repair or failing inspection.

(5) Assembly. No assembly required.

2-216. CAB

a. Disassembly. Refer to Paragraphs 2-216 through 2-263, in this manual, for disassembly, cleaning, inspection, and repair of cab (30, Figure 2-76, Sheet 2 of 2).

b. Cleaning. Refer to Section III.

WARNING

To prevent personal injury when steam cleaning, personnel shall wear proper protective equipment conforming to OSHA Standards.

To prevent serious personal injury when abrasive blasting with high air pressure (120-150 psi), in open areas and confined areas, personnel shall wear full-body protective equipment conforming to OSHA Standards

Adequate ventilation shall be provided while using solvents and cleaners. Prolonged breathing of vapors should be avoided. Do not use near heat or open flame. Avoid prolonged contact with skin. Use of rubber gloves conforming to FED SPEC ZZ-G-381, face shield conforming to L-F-36, and other protective equipment is required according to OSHA Standards.

(1) Steam clean cab (30, Figure 2-76, Sheet 2 of 2) to remove dirt and grease.

(2) Abrasive blast cab (30) to remove paint and corrosion.

(3) Paint cab (30) according to TM 4750-15/1.

c. Inspection. Inspect cab (30) for cracks, breaks, rust-through condition, pitting, broken weldments, dents, deformation, and damage.

d. Repair

(1) Straighten deformed or dented areas using accepted sheet metal practices.

(2) Repair cracks and breaks by welding. Refer to TM 9-237 for welding applications.

(3) Replace rusted-through areas with new metal if possible.

(4) Replace cab (30) damaged beyond repair.

e. Assembly. Refer to Paragraphs 2-353 through 2-399, in this manual, for assembly of cab (30).

2-217. MIRROR ASSEMBLY

a. Disassembly. No disassembly required.

b. Cleaning. Refer to Section III.

WARNING

To prevent personal injury when steam cleaning, personnel shall wear proper protective equipment conforming to OSHA Standards.

To prevent serious personal injury when abrasive blasting with high air pressure (120-150 psi), in open areas and confined areas, personnel shall wear full-body protective equipment conforming to OSHA Standards.

Adequate ventilation shall be provided while using solvents and cleaners. Prolonged breathing of vapors should be avoided. Do not use near heat or open flame. Avoid prolonged contact with skin. Use of rubber gloves conforming to FED SPEC ZZ-G-381, face shield conforming to L-F-36, and other protective equipment is required according to OSHA Standards.

(1) Steam clean all parts to remove dirt and grease.

(2) Abrasive blast support arms and brackets to remove paint, rust, and corrosion.

(3) Mask the mirror glass with Tape, Cloth, Pressure Sensitive (duct tape), NSN 7510-00-890-9874 or equivalent and abrasive blast the metal back of the mirror head with glass beads conforming to MIL-G-9954.

(4) Paint metal back of mirror, while mirror glass is masked, according to TM 4750-15/1.

(5) Remove tape from mirror glass and clean mirror glass with Glass Cleaner, Regular, Type I, Class I, NSN 7930-00-664-6910 or equivalent.

c. Inspection

(1) Inspect the mirror glass for cracks, chips, and discoloration.

(2) Inspect the brackets for bends, breaks and cracks.

NOTE

Bends or dents not affecting support arm adjustment are allowed.

Pitting is allowed as long as 50 percent of the metal remains. All rust shall be removed.

(3) Inspect the support arms for bends, dents, corrosion, and pitting.

d. Repair. Replace mirror assembly and/or support arms damaged beyond repair or failing inspection.

e. Assembly. No assembly required.

2-218. GRAB HANDLES - CAB

a. Disassembly. No disassembly required.

b. Cleaning. Refer to Section III.

WARNING

To prevent personal injury when steam cleaning, personnel shall wear proper protective equipment conforming to OSHA Standards.

To prevent serious personal injury when abrasive blasting with high air pressure (120-150 psi), in open areas and confined areas, personnel shall wear full-body protective equipment conforming to OSHA Standards.

Adequate ventilation shall be provided while using solvents and cleaners. Prolonged breathing of vapors should be avoided. Do not use near heat or open flame. Avoid prolonged contact with skin. Use of rubber gloves conforming to FED SPEC ZZ-G-381, face shield conforming to L-F-36, and other protective equipment is required according to OSHA Standards.

(1) Steam clean grab handles (6 and 8, Figure 2-78) to remove dirt and grease.

(2) Abrasive blast grab handles (6 and 8) to remove paint and corrosion.

(3) Paint grab handles (6 and 8) according to TM 4750-15/1.

c. Inspection. Inspect grab handles (6 and 8) for cracks, breaks, broken weldments, deformation, and damage.

d. Repair

(1) Straighten deformed grab handles (6 and 8) if possible.

(2) Repair cracks and breaks by welding. Refer to TM 9-237 for welding applications.

(3) Replace grab handles (6 and 8) damaged beyond repair.

e. Assembly. No assembly required.

2-219. RUBBER FENDERS - CAB

a. Disassembly. No disassembly required.

b. Cleaning. Refer to Section III.

WARNING

To prevent personal injury when steam cleaning, personnel shall wear proper protective equipment conforming to OSHA Standards.

To prevent serious personal injury when abrasive blasting with high air pressure (120-150 psi), in open areas and confined areas, personnel shall wear full-body protective equipment conforming to OSHA Standards.

Adequate ventilation shall be provided while using solvents and cleaners. Prolonged breathing of vapors should be avoided. Do not use near heat or open flame. Avoid prolonged contact with skin. Use of rubber gloves conforming to FED SPEC ZZ-G-381, face shield conforming to L-F-36, and other protective equipment is required according to OSHA Standards.

(1) Steam clean rubber fenders (4, Figure 2-79) to remove dirt and grease.

(2) Abrasive blast metal parts to remove paint, rust, and corrosion.

(3) Paint metal parts according to TM 4750-15/1.

c. Inspection

(1) Inspect rubber fenders (4, Figure 2-79) for cracks, breaks, deformation, and damage.

(2) Inspect rubber fender (4) metal parts for cracks, breaks, deformation, and damage.

d. Repair

(1) Straighten deformed rubber fender (4) metal parts if possible.

(2) Replace rubber fender (4) metal parts damaged beyond repair.

(3) Replace rubber fenders (4) damaged beyond repair.

e. Assembly. No assembly required.

2-220. ROOF VENT

a. Disassembly. No disassembly required.

CAUTION

To prevent damage to roof vent (4, Figure 2-80), do not abrasive blast.

b. Cleaning. Refer to Section III. Hand clean roof vent (4) using water and detergent conforming to MIL-D-16791.

c. Inspection

(1) Inspect roof vent (4) for dents, cracks, and deformation.

(2) Inspect for deterioration of foam gasket in top of vent.

d. Repair. Replace roof vent (4) damaged beyond repair or failing inspection.

e. Assembly. No assembly required.

2-221. WINDSHIELD WIPER ARMS AND WIPER BLADES

a. Windshield Wiper Arms

(1) Disassembly. No disassembly required.

(2) Cleaning. Refer to Section III.

WARNING

To prevent personal injury when steam cleaning, personnel shall wear proper protective equipment conforming to OSHA Standards.

To prevent serious personal injury when bead blasting, roto blasting, or tumble blasting, personnel shall wear proper eye, ear, and breathing equipment conforming to OSHA Standards.

Adequate ventilation shall be provided while using solvents and cleaners. Prolonged breathing of vapors should be avoided. Do not use near heat or open flame. Avoid prolonged contact with skin. Use of rubber gloves conforming to FED SPEC ZZ-G-381, face shield conforming to L-F-36, and other protective equipment is required according to OSHA Standards.

(a) Steam clean windshield wiper arms (6, Figure 2-81) to remove dirt and grease.

(b) Bead blast windshield wiper arms (6) to remove paint, rust, and corrosion. Use glass beads conforming to MIL-G-9954.

(c) Paint windshield wiper arms (6) according to TM 4750-15/1.

(3) Inspection. Inspect windshield wiper arms (6) for cracks, breaks, deformation, and damage.

(4) Repair. Replace windshield wiper arms (6) failing inspection.

(5) Assembly. No assembly required.

b. Wiper Blades. Replace deteriorated, damaged, or weather checked wiper blades (9).

2-222. AIR HORN

a. Disassembly.

NOTE

Cover (3) mounting hardware has changed from a screw and lockwasher to a screw with captive lockwasher. When repairing a non-A1 series vehicle use the new style hardware to replace the old style hardware. Refer to TM 9-2320-297-24P for correct parts identification.

(1) Remove four screws with captive lockwasher (1, Figure 2-195) and cover (3) from body (10). Discard screws with captive lockwasher (1).

(2) Remove nut (4), spring seat (5), spring (6), contact (7), and diaphragm (8) from cover (3). Discard diaphragm (8).

(3) Remove horn bell (9) from body (10) unscrewing it in a counterclockwise direction.

(4) Repeat steps (1 through 3) for remaining air horn.

b. Cleaning. Refer to Section III.

WARNING

To prevent personal injury when bead blasting, roto blasting, or tumble blasting, personnel shall wear proper eye, ear, and breathing equipment conforming to OSHA Standards.

Dry cleaning solvents are flammable. Do not clean parts near an open flame or in a smoking area. Contact with skin may cause irritation or cracking. Use of rubber gloves conforming to FED SPEC ZZ-G-381, face shield conforming to L-F-36, and other protective equipment is required according to OSHA Standards.

Adequate ventilation shall be provided while using solvents and cleaners. Prolonged breathing of vapors should be avoided. Do not use near heat or open flame. Avoid prolonged contact with skin. Use of rubber gloves conforming to FED SPEC ZZ-G-381, face shield conforming to L-F-36, and other protective equipment is required according to OSHA Standards.

To prevent serious personal injury when abrasive blasting with high air pressure (120-150 psi), in open areas or confined areas, personnel shall wear full-body protective equipment conforming to OSHA Standards.

(1) Bead blast cover, horn, bell, and body using glass beads conforming to MIL-G-9954 to remove paint, rust, and corrosion.

(2) Hand clean internal air horn parts using a cloth dampened with Dry Cleaning Solvent, FED SPEC P-D-680 and a small wire brush to clean metal parts of air horn.

(3) Blow off excess solvent using compress air 25 psi maximum.

(4) Paint air horn parts according to TM 4750-15/1.

c. Inspection.

(1) Inspect air horn parts for cracks, breaks, deformation, and damage.

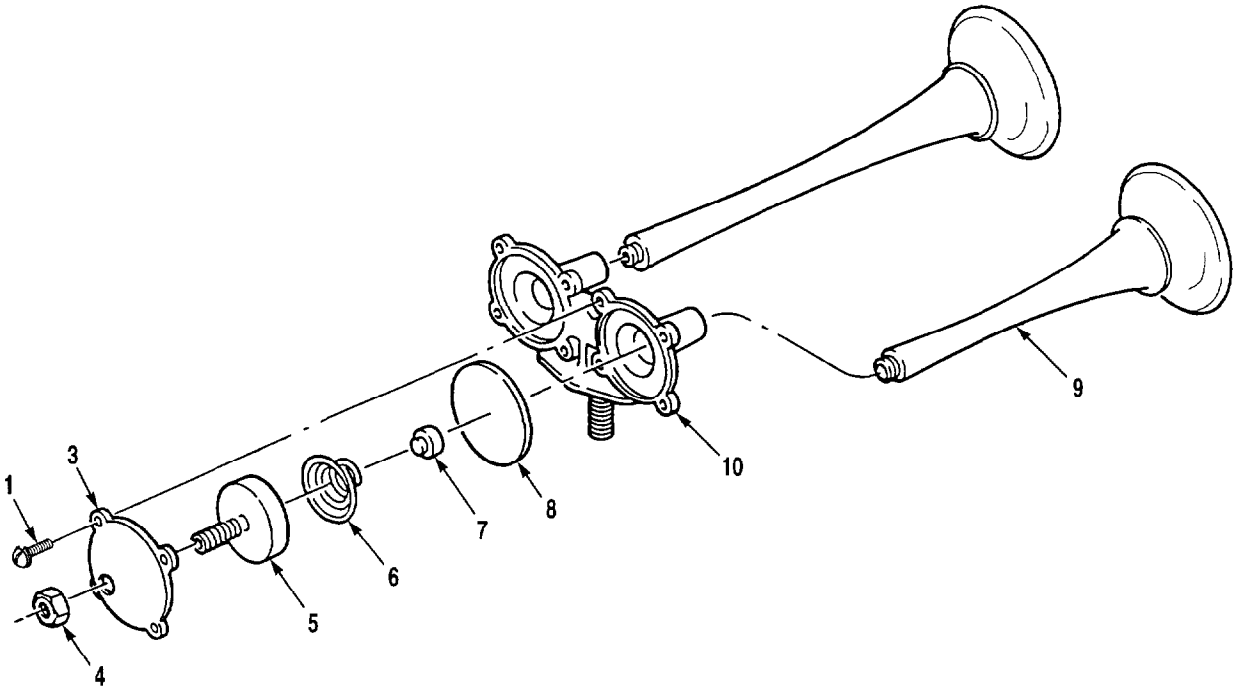

1. Screw with Captive Lockwasher (4)
2. Deleted
3. Cover
4. Nut
5. Spring Seat
6. Spring
7. Contact
8. Diaphragm
9. Horn Bell
10. Body

Figure 2-195. Air Horns Disassembly/Assembly

(2) Inspect threaded areas for crossed, smashed, burred, and damaged threads.

(3) Inspect spring for collapsed condition.

d. Repair

(1) Repair damaged threads according to TM 2350-45.

(2) Replace air horns parts failing inspection.

e. Assembly

(1) Install contact (7) on spring (6).

(2) Install spring (6) on spring seat (5).

(3) Install spring seat (5) in cover (3).

(4) Install nut (4) on spring seat (5) finger tight.

(5) Install new diaphragm (8) in body (10).

(6) Install cover (3) and four new screws with captive lockwasher (1) in body (10). Tighten four new screws with captive lockwasher (1) securely.

(7) Install horn bell (9) in body (10).

(8) Repeat steps (1 through 7) for remaining air horn.

2-223. ELECTRIC HORNS

a. Disassembly. No disassembly required.

b. Cleaning. Refer to Section III.

WARNING

Dry cleaning solvents are flammable. Do not clean parts near an open flame or in a smoking area. Contact with skin may cause irritation or cracking. Use of rubber gloves conforming to FED SPEC ZZ-G-381, face shield conforming to L-F-36, and other protective equipment is required according to OSHA Standards.

Adequate ventilation shall be provided while using solvents and cleaners. Prolonged breathing of vapors should be avoided. Do not use near heat or open flame. Avoid prolonged contact with skin. Use of rubber gloves conforming to FED SPEC ZZ-G-381, face shield conforming to L-F-36, and other protective equipment is required according to OSHA Standards.

When cleaning with compressed air, regulate to 25 psi maximum. Eyeshields must be worn to prevent injury to the eyes or complete loss of sight.

(1) Hand clean electric horns (2, Figure 2-83) using a cloth dampened with Dry Cleaning Solvent, FED SPEC P-D-680 and a small wire brush to remove dirt and grease.

(2) Blow off any excess solvent using compressed air 25 psi maximum.

(3) Paint electric horns (2) according to TM 4750-15/1.

c. Inspection

(1) Inspect electric horns (2) for cracks, breaks, deformation, and damage.

(2) Inspect threaded areas for crossed, smashed, burred, and damaged threads.

d. Repair. Replace electric horns (2) failing inspection.

e. Assembly. No assembly required.

2-224. FRAME 90° GEAR BOX. Refer to TM 2320-34/13 for disassembly, cleaning, inspection, repair, and assembly of frame 90° gear box (5, Figure 2-84).

2-225. DOOR AND MIRROR BRACKET

a. Door. Refer to TM 2320-20/12 for disassembly, cleaning, inspection, repair, and assembly of door (5, Figure 2-85).

b. Mirror Bracket

(1) Disassembly. No disassembly required.

(2) Cleaning. Refer to Section III.

WARNING

To prevent personal injury when steam cleaning, personnel shall wear proper protective equipment conforming to OSHA Standards.

To prevent serious personal injury when abrasive blasting with high air pressure (120-150 psi), in open areas or confined areas, personnel shall wear full-body protective equipment conforming to OSHA Standards.

Adequate ventilation shall be provided while using solvents and cleaners. Prolonged breathing of vapors should be avoided. Do not use near heat or open flame. Avoid prolonged contact with skin. Use of rubber gloves conforming to FED SPEC ZZ-G-381, face shield conforming to L-F-36, and other protective equipment is required according to OSHA Standards.

(1) Steam clean mirror bracket (8, Figure 2-85) to remove dirt and grease.

(2) Abrasive blast mirror bracket (8) to remove paint, rust, and corrosion.

(3) Paint mirror bracket (8) according to TM 4750-15/1.

c. Inspection. Inspect mirror bracket (8) for cracks, breaks, broken weldments, deformation, and damage.

d. Repair

(1) Straighten deformed mirror bracket (8) if possible.

(2) Replace mirror bracket (8) damaged beyond repair or failing inspection.

e. Assembly. No assembly required.

2-226. REAR WINDOW, DOOR WINDOWS, AND PEEP GLASS

a. Disassembly. No disassembly required.

b. Cleaning. Refer to section III. Clean glass with Glass Cleaner, NSN 7930-00-664-6910 or equivalent.

c. Inspection

(1) Inspect all glass for cracks, breaks, chips, and separation.

(2) Inspect all glass for pits in the surface.

d. Repair. Replace all glass failing inspection.

e. Assembly. No assembly required.

2-227. AIR HORN CHAIN AND CONTROL VALVE

a. Air Horn Chain

(1) Disassembly. No disassembly required.

(2) Cleaning. Refer to Section III.

WARNING

Dry cleaning solvents are flammable. Do not clean parts near an open flame or in a smoking area. Contact with skin may cause irritation or cracking. Use of rubber gloves conforming to FED SPEC ZZ-G-381, face shield conforming to L-F-36, and other protective equipment is required according to OSHA Standards.

Adequate ventilation shall be provided while using solvents and cleaners. Prolonged breathing of vapors should be avoided. Do not use near heat or open flame. Avoid prolonged contact with skin. Use of rubber gloves conforming to FED SPEC ZZ-G-381, face shield conforming to L-F-36, and other protective equipment is required according to OSHA Standards.

When cleaning with compressed air, regulate to 25 psi maximum. Eyeshields must be worn to prevent injury to the eyes or complete loss of sight.

(a) Remove grease and loose dirt from air horn chain (4, Figure 2-86) with cloth or small brush.

(b) Solvent clean air horn chain (4) using a cloth or small brush dampened with Dry Cleaning Solvent, P-D-680.

(c) Blow off any excess dry cleaning solvent using compressed air 25 psi maximum.

(3) Inspection. Inspect air horn chain (4) for cracked, broken, and missing links.

(4) Repair. Replace air horn chain (4) failing inspection.

(5) Assembly. No assembly required.

b. Control Valve

(1) Disassembly. No disassembly required.

(2) Cleaning. Refer to Section III.

WARNING

Dry cleaning solvents are flammable. Do not clean parts near an open flame or in a smoking area. Contact with skin may cause irritation or cracking. Use of rubber gloves conforming to FED SPEC ZZ-G-381, face shield conforming to L-F-36, and other protective equipment is required according to OSHA Standards.

Adequate ventilation shall be provided while using solvents and cleaners. Prolonged breathing of vapors should be avoided. Do not use near heat or open flame. Avoid prolonged contact with skin. Use of rubber gloves conforming to FED SPEC ZZ-G-381, face shield conforming to L-F-36, and other protective equipment is required according to OSHA Standards.

When cleaning with compressed air, regulate to 25 psi maximum. Eyeshields must be worn to prevent injury to the eyes or complete loss of sight.

(a) Remove grease and loose dirt from control valve (2, Figure 2-86) with cloth or small brush.

(b) Solvent clean control valve (2) using a cloth or small brush dampened with Dry Cleaning Solvent, P-D-680.

(c) Blow off any excess dry cleaning solvent using compressed air 25 psi maximum.

(3) Inspection

(a) Inspect control valve (2) for cracks, breaks, and damage.

(b) Inspect threaded areas for crossed, smashed, burred, and damaged threads.

(4) Repair. Replace control valve (2) damaged beyond repair or failing inspection.

(5) Assembly. No assembly required.

2-228. SUN VISORS

a. Disassembly. No disassembly required

b. Cleaning. Refer to section III.

WARNING

Adequate ventilation shall be provided while using solvents and cleaners. Prolonged breathing of vapors should be avoided. Do not use near heat or open flame. Avoid prolonged contact with skin. Use of rubber gloves conforming to FED SPEC ZZ-G-381, face shield conforming to L-F-36, and other protective equipment is required according to OSHA Standards.

(1) Remove loose dirt from sun visor (1, Figure 2-87) using cloth or brush dampened with water and detergent conforming to MIL-D-16791. Rinse thoroughly with clean water and damp cloth.

(2) Allow sun visor (1) to air dry completely.

c. Inspection

(1) Inspect metal parts of sun visor (1) for cracks, breaks, bends, rust, and damage.

(2) Inspect sun visor (1) for tears, holes, and damage.

d. Repair. Replace sun visor (1) failing inspection.

e. Assembly. No assembly required.

2-229. HEADLIGHT DIMMER SWITCH

a. Disassembly. No disassembly required

b. Cleaning. Refer to section III.

WARNING

Adequate ventilation shall be provided while using solvents and cleaners. Prolonged breathing of vapors should be avoided. Do not use near heat or open flame. Avoid prolonged contact with skin. Use of rubber gloves conforming to FED SPEC ZZ-G-381, face shield conforming to L-F-36, and other protective equipment is required according to OSHA Standards.

(1) Remove loose dirt from headlight dimmer switch (3, Figure 2-88) using cloth or small brush.

(2) Hand clean headlight dimmer switch (3) using cloth or small brush dampened with Isopropyl Alcohol, FED SPEC TT-I-735.

(3) Allow headlight dimmer switch (3) to air dry completely.

c. Inspection

(1) Inspect headlight dimmer switch (3) for proper operation using a volt/ohm meter.

(2) Inspect headlight dimmer switch (3) for bent, twisted, and damaged connectors.

(3) Inspect headlight dimmer switch (3) wiring for weather checking, breaks, frays, bare spots, and damage.

d. Repair

(1) Straighten electrical connectors if possible.

(2) Replace headlight dimmer switch (3) damaged beyond repair or failing inspection.

e. Assembly. No assembly required.

2-230. ACCESS COVERS

a. Disassembly. No disassembly required.

b. Cleaning. Refer to Section III.

WARNING

To prevent personal injury when steam cleaning, personnel shall wear proper protective equipment conforming to OSHA Standards.

To prevent serious personal injury when abrasive blasting with high air pressure (120-150 psi), in open areas and confined areas, personnel shall wear full-body protective equipment conforming to OSHA Standards.

Adequate ventilation shall be provided while using solvents and cleaners. Prolonged breathing of vapors should be avoided. Do not use near heat or open flame. Avoid prolonged contact with skin. Use of rubber gloves conforming to FED SPEC ZZ-G-381, face shield conforming to L-F-36, and other protective equipment is required according to OSHA Standards.

(1) Steam clean access covers to remove dirt and grease.

(2) Abrasive blast access covers to remove paint, rust, and corrosion.

(3) Paint access covers according to TM 4750/15-1.

c. Inspection. Inspect access covers for deformation, cracks, dents, and broken welds.

d. Repair

(1) Straighten deformed or dented areas using accepted sheet metal practices.

(2) Repair cracks by welding. Refer to TM 9-237 for welding applications.

(3) Replace access covers damaged beyond repair or failing inspection.

e. Assembly. No assembly required.

2-231. WARNING/INDICATOR LIGHTS

a. Disassembly. No disassembly required.

WARNING

Adequate ventilation shall be provided while using solvents and cleaners. Prolonged breathing of vapors should be avoided. Do not use near heat or open flame. Avoid prolonged contact with skin. Use of rubber gloves conforming to FED SPEC ZZ-G-381, face shield conforming to L-F-36, and other protective equipment is required according to OSHA Standards.

b. Cleaning. Refer to Section III. Hand clean warning/indicator lights using cloth dampened with Isopropyl Alcohol, FED SPEC TT-I-735. Allow warning/indicator lights to air dry completely.

c. Inspection

WARNING

To prevent electric shock to personnel, do not wear watches, rings, or other jewelry when working with electrical components.

(1) Inspect warning/indicator light wiring for weather checking, breaks, frays, bare spots, and damage.

(2) Inspect warning/indicator light bulb for proper operation using a 24 V power supply and a proper grounding system.

d. Repair. Replace warning/indicator lights damaged beyond repair or failing inspection.

e. Assembly. No assembly required.

2-232. OPTIC RIBBON LIGHT SOURCE

a. Disassembly. No disassembly required.

WARNING

Adequate ventilation shall be provided while using solvents and cleaners. Prolonged breathing of vapors should be avoided. Do not use near heat or open flame. Avoid prolonged contact with skin. Use of rubber gloves conforming to FED SPEC ZZ-G-381, face shield conforming to L-F-36, and other protective equipment is required according to OSHA Standards.

b. Cleaning. Refer to Section III. Hand clean optic ribbon light source (6, Figure 2-92) using cloth dampened with Isopropyl Alcohol, FED SPEC TT-I-735. Allow optic ribbon light source (6) to air dry completely.

c. Inspection

WARNING

To prevent electric shock to personnel, do not wear watches, rings, or other jewelry when working with electrical components.

(1) Inspect optic ribbon light source (6) for cracks, breaks, deformation, and damage.

(2) Inspect bulb (2, Figure 2-92) and wiring for proper operation using a 24 V power supply and a proper grounding system.

d. Repair. Replace optic ribbon light source (6) damaged beyond repair or failing inspection.

e. Assembly. No assembly required.

2-233. OPTIC RIBBONS

a. Disassembly. No disassembly required

WARNING

Adequate ventilation shall be provided while using solvents and cleaners. Prolonged breathing of vapors should be avoided. Do not use near heat or open flame. Avoid prolonged contact with skin. Use of rubber gloves conforming to FED SPEC ZZ-G-381, face shield conforming to L-F-36, and other protective equipment is required according to OSHA Standards.

b. Cleaning. Refer to section III. Hand clean optic ribbons (1, Figure 2-93) using cloth dampened with Isopropyl Alcohol, FED SPEC TT-I-735. Allow optic ribbons (1) to air dry completely.

WARNING

To prevent electric shock to personnel, do not wear watches, rings, or other jewelry when working with electrical components.

NOTE

To inspect optic ribbons for proper operation, it may be necessary to set up an optic ribbon light source using a 24 V power supply and a proper grounding system.

c. Inspection. Inspect optic ribbons (1) for cracks, breaks, deformation, damage and proper operation.

d. Repair. Replace optic ribbons (1) damaged beyond repair or failing inspection.

e. Assembly. No assembly required.

2-234. TOGGLE SWITCHES

a. Disassembly. No disassembly required.

WARNING

Adequate ventilation shall be provided while using solvents and cleaners. Prolonged breathing of vapors should be avoided. Do not use near heat or open flame. Avoid prolonged contact with skin. Use of rubber gloves conforming to FED SPEC ZZ-G-381, face shield conforming to L-F-36, and other protective equipment is required according to OSHA Standards.

b. Cleaning. Refer to Section III. Use a cloth dampened with Isopropyl Alcohol, FED SPEC TT-I-735 and a small wire brush to clean toggle switches (2, Figure 2-94). Allow toggle switches (2) to air dry thoroughly.

c. Inspection

(1) Inspect toggle switches (2) for cracks, breaks, deformation, and damage.

(2) Inspect toggle switches (2) for proper operation using a volt/ohm meter.

d. Repair. Replace toggle switches (2) damaged beyond repair or failing inspection.

e. Assembly. No assembly required.

2-235. CIRCUIT BREAKERS

a. Disassembly. No disassembly required.

WARNING

Adequate ventilation shall be provided while using solvents and cleaners. Prolonged breathing of vapors should be avoided. Do not use near heat or open flame. Avoid prolonged contact with skin. Use of rubber gloves conforming to FED SPEC ZZ-G-381, face shield conforming to L-F-36, and other protective equipment is required according to OSHA Standards.

b. Cleaning. Refer to Section III. Use a cloth dampened with Isopropyl Alcohol, FED SPEC TT-I-735 and a small wire brush to clean circuit breakers (1 through 13, Figure 2-95). Allow circuit breakers (1 through 13) to air dry thoroughly.

c. Inspection

(1) Inspect circuit breakers (1 through 13) for cracks, breaks, deformation, and damaged electrical connectors.

(2) Inspect threaded areas for crossed, smashed, burred, and damaged threads.

(3) Inspect circuit breakers (1 through 13) for proper operation using a volt/ohm meter.

d. Repair. Replace circuit breakers (1 through 13) damaged beyond repair or failing inspection.

e. Assembly. No assembly required.

2-236. MAGNETIC SWITCHES

a. Disassembly. No disassembly required.

WARNING

Adequate ventilation shall be provided while using solvents and cleaners. Prolonged breathing of vapors should be avoided. Do not use near heat or open flame. Avoid prolonged contact with skin. Use of rubber gloves conforming to FED SPEC ZZ-G-381, face shield conforming to L-F-36, and other protective equipment is required according to OSHA Standards.

b. Cleaning. Refer to Section III. Use a cloth dampened with Isopropyl Alcohol, FED SPEC TT-I-735 and a small wire brush to clean magnetic switches (9, Figure 2-96). Allow magnetic switches (9) to air dry thoroughly.

c. Inspection

(1) Inspect magnetic switches (9) for cracks, breaks, deformation, and damage.

(2) Inspect threaded areas for crossed, smashed, burred, and damaged threads.

(3) Inspect magnetic switches (9) for proper operation using a volt/ohm meter.

d. Repair

(1) Repair threaded areas according to TM 2350-45.

(2) Replace magnetic switches (9) damaged beyond repair or failing inspection.

e. Assembly. No assembly required.

2-237. RELAY SWITCHES

a. Disassembly. No disassembly required.

WARNING

Adequate ventilation shall be provided while using solvents and cleaners. Prolonged breathing of vapors should be avoided. Do not use near heat or open flame. Avoid prolonged contact with skin. Use of rubber gloves conforming to FED SPEC ZZ-G-381, face shield conforming to L-F-36, and other protective equipment is required according to OSHA Standards.

b. Cleaning. Refer to Section III. Use a cloth dampened with Isopropyl Alcohol, FED SPEC TT-I-735 and a small wire brush to clean relay switches (2, Figure 2-97). Allow relay switches (2) to air dry thoroughly.

c Inspection

(1) Inspect relay switches (2) for cracks, breaks, deformation, and damage.

(2) Inspect relay switches (2) for proper operation using a volt/ohm meter.

d. Repair. Replace relay switches (2) damaged beyond repair or failing inspection.

e. Assembly. No assembly required.

2-238. RESISTORS

a. Disassembly. No disassembly required.

WARNING

Adequate ventilation shall be provided while using solvents and cleaners. Prolonged breathing of vapors should be avoided. Do not use near heat or open flame. Avoid prolonged contact with skin. Use of rubber gloves conforming to FED SPEC ZZ-G-381, face shield conforming to L-F-36, and other protective equipment is required according to OSHA Standards.

b. Cleaning. Refer to Section III. Use a cloth dampened with Isopropyl Alcohol, FED SPEC TT-I-735 and a small wire brush to clean resistors (4, Figure 2-98). Allow resistors (4) to air dry thoroughly.

c. Inspection

(1) Inspect resistors (4) for cracks, breaks, deformation, and damage.

(2) Inspect resistor wiring for weather checking, breaks, frays, bare spots, and damage.

(3) Inspect resistors (4) proper operation using a volt/ohm meter.

d. Repair. Replace resistors (4) damaged beyond repair or failing inspection.

e. Assembly. No assembly required.

2-239. DOME LIGHT

a. Disassembly. No disassembly required.

b. Cleaning. Refer to Section III.

WARNING

Adequate ventilation shall be provided while using solvents and cleaners. Prolonged breathing of vapors should be avoided. Do not use near heat or open flame. Avoid prolonged contact with skin. Use of rubber gloves conforming to FED SPEC ZZ-G-381, face shield conforming to L-F-36, and other protective equipment is required according to OSHA Standards.

(1) Use a cloth dampened with Isopropyl Alcohol, FED SPEC TT-I-735 and a small wire brush to clean metal parts of dome light.

(2) Hand clean lens (2, Figure 2-99) using water and detergent conforming to MIL-D-16791. Rinse lens (2) thoroughly with clean water.

(3) Allow dome light parts to air dry thoroughly.

c. Inspection

(1) Inspect metal parts of dome light for deformation, cracks, breaks, and damage.

(2) Inspect lens (2) for cracks, breaks, deformation, and damage.

(3) Inspect dome light wire (9) for weather checking, breaks, frays, bare spots, and damage.

(4) Inspect bulb (3) for serviceability using a 24 V power supply and a proper grounding system.

d. Repair. Replace dome light parts damaged beyond repair or failing inspection.

e. Assembly. No assembly required.

2-240. MAP LIGHT

a. Disassembly. No disassembly required.

b. Cleaning. Refer to Section III.

WARNING

Adequate ventilation shall be provided while using solvents and cleaners. Prolonged breathing of vapors should be avoided. Do not use near heat or open flame. Avoid prolonged contact with skin. Use of rubber gloves conforming to FED SPEC ZZ-G-381, face shield conforming to L-F-36, and other protective equipment is required according to OSHA Standards.

(1) Use a cloth dampened with Isopropyl Alcohol, FED SPEC TT-I-735 and a small wire brush to clean metal parts of map light.

(2) Hand clean lens (1, Figure 2-100) using water and detergent conforming to MIL-D-16791. Rinse lens (1) thoroughly with clean water.

(3) Allow map light parts to air dry thoroughly.

c. Inspection

(1) Inspect metal parts of map light for cracks, breaks, deformation, and damage.

(2) Inspect lens (1) for cracks, breaks, deformation, and damage.

(3) Inspect map light wire (12) for weather checking, breaks, frays, bare spots, and damage.

(4) Inspect bulb (2) for serviceability using a 24 V power supply and a proper grounding system.

d. Repair. Replace map light parts damaged beyond repair or failing inspection.

e. Assembly. No assembly required.

2-241. INSTRUMENT PANEL ASSEMBLY

a. Disassembly. Refer to TM 2320-20/12 for removal of instrument panel assembly (2, Figure 101) wiring harness and gauges.

b. Cleaning. Refer to Section III.

WARNING

To prevent personal injury when steam cleaning, personnel shall wear proper protective equipment conforming to OSHA Standards.

To prevent serious personal injury when abrasive blasting with high air pressure (120-150 psi), in open areas or confined areas, personnel shall wear full-body protective equipment conforming to OSHA Standards.

Adequate ventilation shall be provided while using solvents and cleaners. Prolonged breathing of vapors should be avoided. Do not use near heat or open flame. Avoid prolonged contact with skin. Use of rubber gloves conforming to FED SPEC ZZ-G-381, face shield conforming to L-F-36, and other protective equipment is required according to OSHA Standards.

(1) Steam clean instrument panel assembly (2) to remove dirt and grease.

(2) Abrasive blast instrument panel assembly (2) to remove paint, rust, and corrosion.

(3) Hand clean gauges using a cloth dampened with Isopropyl Alcohol, FED SPEC TT-I-735 to remove dirt and grease. Allow gauges to air dry.

(4) Paint instrument panel assembly (2) according to TM 4750-15/1.

c. Inspection

(1) Inspect instrument panel assembly (2) for cracks, breaks, dents, deformation, and damage.

NOTE

Mechanical gauges and some electrical gauges will have to be installed in vehicle to be properly tested. Other electrical gauges can be checked by using a volt/ohm meter.

(2) Inspect mechanical gauges for proper function.

(3) Inspect electrical gauges for proper function.

d. Repair. Replace instrument panel assembly parts damaged beyond repair or failing inspection.

e. Assembly. Refer to TM 2320-20/12 for installation of instrument panel assembly (2) gauges and wiring harness.

2-242. LOW AIR PRESSURE ALARM

a. Disassembly. No disassembly required

WARNING

Adequate ventilation shall be provided while using solvents and cleaners. Prolonged breathing of vapors should be avoided. Do not use near heat or open flame. Avoid prolonged contact with skin. Use of rubber gloves conforming to FED SPEC ZZ-G-381, face shield conforming to L-F-36, and other protective equipment is required according to OSHA Standards.

b. Cleaning. Refer to Section III. Use a cloth dampened with Isopropyl Alcohol, FED SPEC TT-I-735 and a small wire brush to clean low air pressure alarm (5, Figure 2-102). Allow low air pressure alarm (5) to air dry thoroughly.

c. Inspection

(1) Inspect low air pressure alarm (5) for cracks, breaks, deformation, and damage.

(2) Inspect low air pressure alarm (5) for bent, twisted, broken, and damaged electrical connectors.

(3) Inspect threaded areas for crossed, smashed, burred, and damaged threads.

(4) Inspect low air pressure alarm (5) for proper operation using a volt/ohm meter.

d. Repair. Replace low air pressure alarm (5) damaged beyond repair or failing inspection.

e. Assembly. No assembly required.

2-243. TRAILER AIR SUPPLY VALVE

a. Disassembly. No disassembly required.

WARNING

Adequate ventilation shall be provided while using solvents and cleaners. Prolonged breathing of vapors should be avoided. Do not use near heat or open flame. Avoid prolonged contact with skin. Use of rubber gloves conforming to FED SPEC ZZ-G-381, face shield conforming to L-F-36, and other protective equipment is required according to OSHA Standards.

CAUTION

To prevent damage to trailer air supply valve, plug all openings before cleaning with solvent.

b. Cleaning. Refer to Section III. Hand clean trailer air supply valve (11, Figure 2-103) using a cloth dampened with Dry Cleaning Solvent, FED SPEC P-D-680 and a small wire brush. Allow trailer air supply valve (11) to air dry thoroughly.

c. Inspection

(1) Inspect trailer air supply valve (11) for cracks, breaks, holes, and damage.

(2) Inspect threaded areas for crossed, smashed, burred, and damaged threads.

d. Repair

(1) Repair damaged threads according to TM 2350-45.

(2) Replace trailer air supply valve (11) damaged beyond repair or failing inspection.

e. Assembly. No assembly required.

2-244. PARKING BRAKE VALVE

a. Disassembly. No disassembly required.

WARNING

Adequate ventilation shall be provided while using solvents and cleaners. Prolonged breathing of vapors should be avoided. Do not use near heat or open flame. Avoid prolonged contact with skin. Use of rubber gloves conforming to FED SPEC ZZ-G-381, face shield conforming to L-F-36, and other protective equipment is required according to OSHA Standards.

CAUTION

To prevent damage to parking brake valve, plug all openings before cleaning.

b. Cleaning. Refer to Section III. Hand clean parking brake valve (4, Figure 2-104) using a cloth dampened with Dry Cleaning Solvent, FED SPEC P-D-680 and a small wire brush. Allow parking brake valve (4) to air dry thoroughly.

c. Inspection

(1) Inspect parking brake valve (4) for cracks, breaks, holes, and damage.

(2) Inspect threaded areas for crossed, smashed, burred, and damaged threads.

d. Repair

(1) Repair damaged threads according to TM 2350-45.

(2) Replace parking brake valve (4) damaged beyond repair or failing inspection.

e. Assembly. No assembly required.

2-245. ETHER START SWITCH

a. Disassembly. No disassembly required

WARNING

Adequate ventilation shall be provided while using solvents and cleaners. Prolonged breathing of vapors should be avoided. Do not use near heat or open flame. Avoid prolonged contact with skin. Use of rubber gloves conforming to FED SPEC ZZ-G-381, face shield conforming to L-F-36, and other protective equipment is required according to OSHA Standards.

b. Cleaning. Refer to Section III. Use a cloth dampened with Isopropyl Alcohol, FED SPEC TT-I-735 and a small wire brush to clean ether start switch (3, Figure 2-105). Allow ether start switch (3) to air dry thoroughly.

c. Inspection

(1) Inspect ether start switch (3) for cracks, breaks, deformation, and damage.

(2) Inspect threaded areas for crossed, smashed, burred, and damaged threads.

(3) Inspect ether start switch (3) for proper operation using a volt/ohm meter.

d. Repair

(1) Repair damaged threads according to TM 2350-45.

(2) Replace ether start switch (3) damaged beyond repair or failing inspection.

e. Assembly. No assembly required.

2-246. DRIVE LINE LOCKUP SWITCH

a. Disassembly. No disassembly required.

WARNING

Adequate ventilation shall be provided while using solvents and cleaners. Prolonged breathing of vapors should be avoided. Do not use near heat or open flame. Avoid prolonged contact with skin. Use of rubber gloves conforming to FED SPEC ZZ-G-381, face shield conforming to L-F-36, and other protective equipment is required according to OSHA Standards.

CAUTION

To prevent damage to drive line lockup switch, plug all openings before cleaning with solvent.

b. Cleaning. Refer to Section III. Hand clean drive line lockup switch (3, Figure 2-106) using a cloth dampened with Dry Cleaning Solvent, FED SPEC P-D-680 and a small wire brush. Allow drive line lockup switch (3) to air dry thoroughly.

c. Inspection

(1) Inspect drive line lockup switch (3) for cracks, breaks, holes, and damage.

(2) Inspect threaded areas for crossed, smashed, burred, and damaged threads.

d. Repair

(1) Repair damaged threads according to TM 2350-45.

(2) Replace drive line lockup switch (3) damaged beyond repair or failing inspection.

e. Assembly. No assembly required.

2-247. AIR RESTRICTION INDICATOR. Replace damaged or defective air restriction indicator (1, Figure 2-107).

2-248. IGNITION SWITCH

a. Disassembly. No disassembly required

WARNING

Adequate ventilation shall be provided while using solvents and cleaners. Prolonged breathing of vapors should be avoided. Do not use near heat or open flame. Avoid prolonged contact with skin. Use of rubber gloves conforming to FED SPEC ZZ-G-381, face shield conforming to L-F-36, and other protective equipment is required according to OSHA Standards.

b. Cleaning. Refer to Section III. Use a cloth dampened with Isopropyl Alcohol, FED SPEC TT-I-735 and a small wire brush to clean ignition switch (5, Figure 2-108). Allow ignition switch (5) to air dry thoroughly.

c. Inspection

(1) Inspect ignition switch (5) for cracks, breaks, deformation, and damage.

(2) Inspect threaded areas for crossed, smashed, burred, and damaged threads.

(3) Inspect ignition switch (5) for proper operation using a volt/ohm meter.

d. Repair

(1) Repair damaged threads according to TM 2350-45.

(2) Replace ignition switch (5) damaged beyond repair or failing inspection.

e. Assembly. No assembly required.

2-249. WINDSHIELD WIPER MOTORS

a. Disassembly. No disassembly required.

WARNING

Dry cleaning solvents are flammable. Do not clean parts near an open flame or in a smoking area. Contact with skin may cause irritation or cracking. Use of rubber gloves conforming to FED SPEC ZZ-G-381, face shield conforming to L-F-36, and other protective equipment is required according to OSHA Standards.

Adequate ventilation shall be provided while using solvents and cleaners. Prolonged breathing of vapors should be avoided. Do not use near heat or open flame. Avoid prolonged contact with skin. Use of rubber gloves conforming to FED SPEC ZZ-G-381, face shield conforming to L-F-36, and other protective equipment is required according to OSHA Standards.

CAUTION

To prevent damage to windshield wiper motor, plug all openings before cleaning with solvent.

b. Cleaning. Refer to Section III. Hand clean windshield wiper motor (15, Figure 2-109) using a cloth dampened with Dry Cleaning Solvent, FED SPEC P-D-680 and a small wire brush. Allow windshield wiper motor (15) to air dry thoroughly.

c. Inspection

(1) Inspect windshield wiper motor (15) for cracks, breaks, holes, and damage.

(2) Inspect threaded areas for crossed, smashed, burred, and damaged threads.

d. Repair

(1) Repair damaged threads according to TM 2350-45.

(2) Replace windshield wiper motor (15) damaged beyond repair or failing inspection.

e. Assembly. No assembly required.

2-250. HAND CONTROL VALVE. Refer to TM 2320-34/13 for disassembly, cleaning, inspection, repair, and assembly of hand control valve (3, Figure 2-110).

2-251. WINDSHIELD WIPER CONTROL VALVES

a. Disassembly. No disassembly required.

WARNING

Dry cleaning solvents are flammable. Do not clean parts near an open flame or in a smoking area. Contact with skin may cause irritation or cracking. Use of rubber gloves conforming to FED SPEC ZZ-G-381, face shield conforming to L-F-36, and other protective equipment is required according to OSHA Standards.

Adequate ventilation shall be provided while using solvents and cleaners. Prolonged breathing of vapors should be avoided. Do not use near heat or open flame. Avoid prolonged contact with skin. Use of rubber gloves conforming to FED SPEC ZZ-G-381, face shield conforming to L-F-36, and other protective equipment is required according to OSHA Standards.

CAUTION

To prevent damage to windshield wiper control valve (3, Figure 2-111), plug all openings before cleaning with solvent.

b. Cleaning. Refer to Section III. Hand clean windshield wiper control valve (3) using a cloth dampened with Dry Cleaning Solvent, FED SPEC P-D-680 and a small wire brush. Allow windshield wiper control valve (3) to air dry thoroughly.

c. Inspection

(1) Inspect windshield wiper control valve (3) for cracks, breaks, and damage.

(2) Inspect threaded areas for crossed, smashed, burred, and damaged threads.

d. Repair

(1) Repair damaged threads according to TM 2350-45.

(2) Replace windshield wiper control valve (3) failing inspection.

e. Assembly. No assembly required.

2-252. WINDSHIELD WASHER CONTROL VALVE

a. Disassembly. No disassembly required.

WARNING

Dry cleaning solvents are flammable. Do not clean parts near an open flame or in a smoking area. Contact with skin may cause irritation or cracking. Use of rubber gloves conforming to FED SPEC ZZ-G-381, face shield conforming to L-F-36, and other protective equipment is required according to OSHA Standards.

WARNING

Adequate ventilation shall be provided while using solvents and cleaners. Prolonged breathing of vapors should be avoided. Do not use near heat or open flame. Avoid prolonged contact with skin. Use of rubber gloves conforming to FED SPEC ZZ-G-381, face shield conforming to L-F-36, and other protective equipment is required according to OSHA Standards.

CAUTION

To prevent damage to windshield washer control valve, plug all openings before cleaning with solvent.

b. Cleaning. Refer to Section III. Hand clean windshield washer control valve (2, Figure 2-112) using a cloth dampened with Dry Cleaning Solvent, FED SPEC P-D-680 and a small wire brush. Allow windshield washer control valve (2) to air dry thoroughly.

c. Inspection

(1) Inspect windshield washer control valve (2) for cracks, breaks, holes, and damage.

(2) Inspect threaded areas for crossed, smashed, burred, and damaged threads.

d. Repair

(1) Repair damaged threads according to TM 2350-45.

(2) Replace windshield washer control valve (2) damaged beyond repair or failing inspection.

e. Assembly. No assembly required.

2-253. MASTER LIGHT SWITCH

a. Disassembly. No disassembly required.

WARNING

Adequate ventilation shall be provided while using solvents and cleaners. Prolonged breathing of vapors should be avoided. Do not use near heat or open flame. Avoid prolonged contact with skin. Use of rubber gloves conforming to FED SPEC ZZ-G-381, face shield conforming to L-F-36, and other protective equipment is required according to OSHA Standards.

b. Cleaning. Refer to Section III. Use a cloth dampened with Isopropyl Alcohol, FED SPEC TT-I-735 and a small wire brush to clean master light switch (8, Figure 2-113). Allow master light switch (8) to air dry thoroughly.

c. Inspection

(1) Inspect master light switch (8) for cracks, breaks, deformation, and damage.

(2) Inspect threaded areas for crossed, smashed, burred, and damaged threads.

(3) Inspect master light switch (8) for proper operation using a volt/ohm meter.

d. Repair

(1) Repair damaged threads according to TM 2350-45.

(2) Replace master light switch (8) damaged beyond repair or failing inspection.

e. Assembly. No assembly required.

2-254. TRANSMISSION SHIFT CONTROL

a. Disassembly. No disassembly required.

b. Cleaning. Refer to Section III.

WARNING

Adequate ventilation shall be provided while using solvents and cleaners. Prolonged breathing of vapors should be avoided. Do not use near heat or open flame. Avoid prolonged contact with skin. Use of rubber gloves conforming to FED SPEC ZZ-G-381, face shield conforming to L-F-36, and other protective equipment is required according to OSHA Standards.

(1) Remove loose dirt with cloth and a small brush.

(2) Wash transmission shift control (3, Figure 2-114) with water and detergent conforming to MIL-D-16791.

(3) Allow transmission shift control (3) to air dry thoroughly.

c. Inspection

(1) Inspect transmission shift control (3) for cracks, breaks, deformation, and damage.

(2) Inspect transmission shift control (3) for proper operation. Any binding condition is not acceptable.

(3) Inspect rubber parts for dry rot, tears, holes, and damage.

(4) Inspect lens for cracks, breaks, scratches, and damage.

d. Repair. Replace transmission shift control (3) damaged beyond repair or failing inspection.

e. Assembly. No assembly required.

2-255. TRANSFER CASE SHIFT LEVER

a. Disassembly. No disassembly required.

WARNING

Dry cleaning solvents are flammable. Do not clean parts near an open flame or in a smoking area. Contact with skin may cause irritation or cracking. Use of rubber gloves conforming to FED SPEC ZZ-G-381, face shield conforming to L-F-36, and other protective equipment is required according to OSHA Standards.

Adequate ventilation shall be provided while using solvents and cleaners. Prolonged breathing of vapors should be avoided. Do not use near heat or open flame. Avoid prolonged contact with skin. Use of rubber gloves conforming to FED SPEC ZZ-G-381, face shield conforming to L-F-36, and other protective equipment is required according to OSHA Standards.

b. Cleaning. Refer to Section III. Hand clean transfer case shift lever (3, Figure 2-115) using a cloth dampened with Dry Cleaning Solvent, FED SPEC P-D-680 and a small wire brush. Allow transfer case shift lever (3) to air dry thoroughly.

c. Inspection

(1) Inspect transfer case shift lever (3) for cracks, breaks, and damage.

(2) Inspect transfer case shift lever (3) for proper operation. Any binding condition is not acceptable.

(3) Inspect threaded areas for crossed, smashed, burred, and damaged threads.

d. Repair

(1) Repair damaged threads according to TM 2350-45.

(2) Replace transfer case shift lever (3) damaged beyond repair or failing inspection.

e. Assembly. No assembly required.

2-256. HEATER ASSEMBLY

a. Disassembly

(1) Remove heater blower assembly. Refer to Paragraph 2-102a.

(2) Remove heater core. Refer to Paragraph 2-102b.

b. Cleaning. Refer to Section III.

WARNING

To prevent personal injury when steam cleaning, personnel shall wear proper protective equipment conforming to OSHA Standards.

To prevent serious personal injury when abrasive blasting with high air pressure (120-150 psi), in open areas or confined areas, personnel shall wear full-body protective equipment conforming to OSHA Standards.

Adequate ventilation shall be provided while using solvents and cleaners. Prolonged breathing of vapors should be avoided. Do not use near heat or open flame. Avoid prolonged contact with skin. Use of rubber gloves conforming to FED SPEC ZZ-G-381, face shield conforming to L-F-36, and other protective equipment is required according to OSHA Standards.

(1) Steam clean heater assembly (13, Figure 2-116) to remove dirt and grease.

(2) Abrasive blast heater assembly (13) remove paint, rust, and corrosion.

(3) Paint heater assembly (13) according to TM 4750-15/1.

c. Inspection

(1) Inspect heater assembly (13) for deformation, cracks, dents, and broken welds.

(2) Inspect threaded areas for crossed, smashed, burred, and damaged threads.

d. Repair

(1) Straighten deformed or dented areas using accepted sheet metal practices.

(2) Repair cracks by welding. Refer to TM 9-237 for welding applications.

(3) Repair damaged threads according to TM 2350-45.

(4) Replace heater assembly (13) damaged beyond repair or failing inspection.

e. Assembly. No assembly required.

2-257. HEATER BLOWER ASSEMBLY AND HEATER CORE

a. Heater Blower Assembly

(1) Disassembly

(a) Remove three capscrews (1, Figure 2-196) and end plate (2) from each end of blower housing (3).

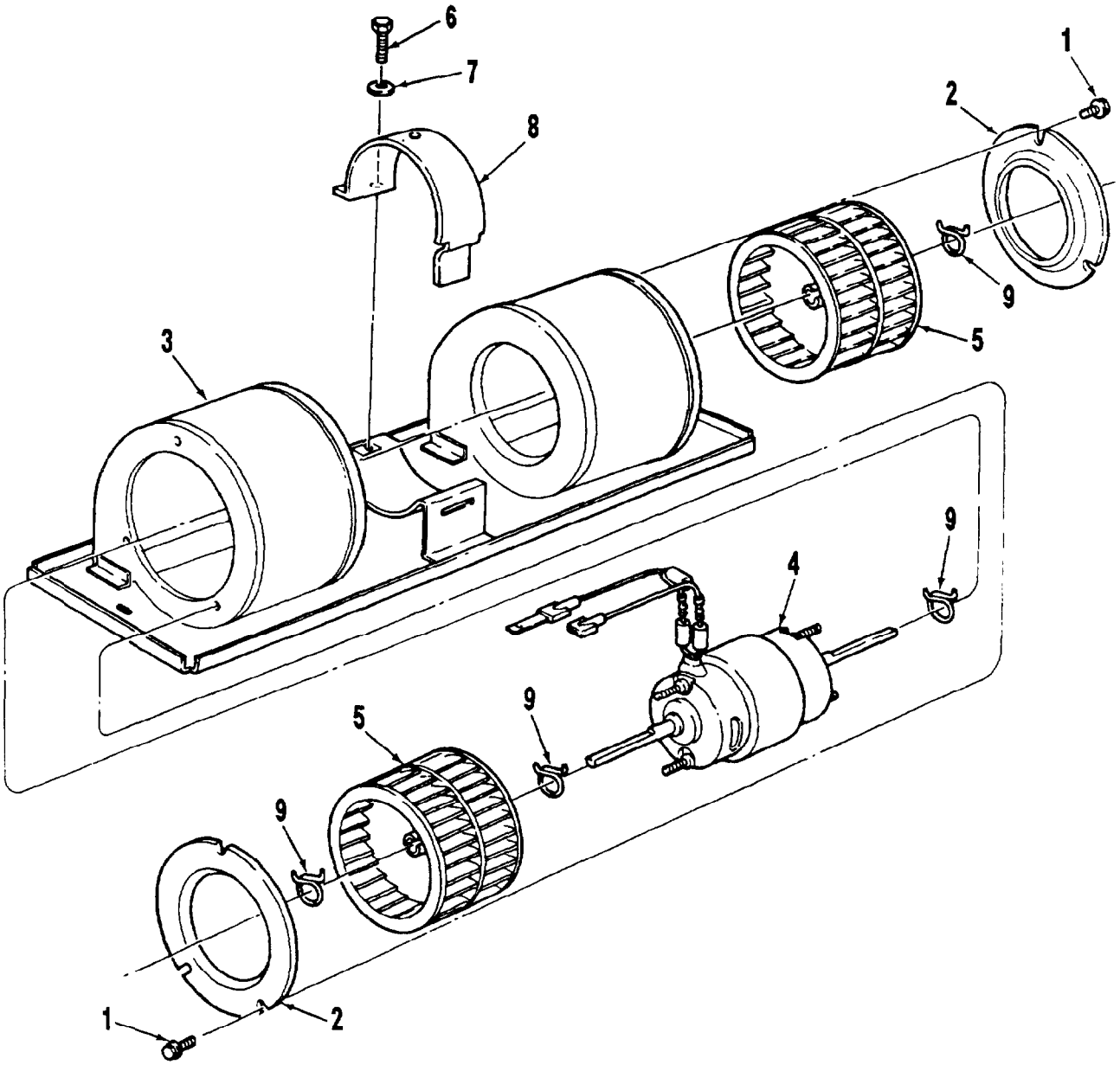

1. Capscrew (3)
2. End Plate (2)
3. Blower Housing
4. Motor
5. Fan Wheel (2)
6. Capscrew
7. Washer
8. Bracket
9. Spring Clamp (4)

Figure 2-196. Heater Blower Disassembly/Assembly

NOTE

To ensure motor (4) and fan wheels (5) are installed in the correct rotation direction, matchmark each piece in relationship to the other before removal.

(b) Matchmark motor (4), blower housing (3), and each fan wheel (5).

(c) Remove capscrew (6), washer (7), and bracket (8) from fan motor (4).

(d) Remove spring clamps (9) from fan wheel (5). Repeat for remaining fan wheel (5).

(e) Remove fan wheels (5) from motor (4) and blower housing (3).

(f) Slide motor (4) out of blower housing (3).

(2) Cleaning. Refer to Section III.

WARNING

To prevent personal injury when steam cleaning, personnel shall wear proper protective equipment conforming to OSHA Standards.

To prevent serious personal injury when abrasive blasting with high air pressure (120-150 psi), in open areas or confined areas, personnel shall wear full-body protective equipment conforming to OSHA Standards.

Adequate ventilation shall be provided while using solvents and cleaners. Prolonged breathing of vapors should be avoided. Do not use near heat or open flame. Avoid prolonged contact with skin. Use of rubber gloves conforming to FED SPEC ZZ-G-381, face shield conforming to L-F-36, and other protective equipment is required according to OSHA Standards.

(a) Steam clean end plates, blower housing, and fan wheels to remove dirt and grease.

(b) Abrasive blast end plates, blower housing, and fan wheels to remove paint, rust, and corrosion.

(c) Clean motor using a cloth or small brush dampened with Isopropyl Alcohol, FED SPEC TT-I-735 to remove dirt and grease. Allow motor to air dry thoroughly.

(d) Paint heater blower assembly parts and motor according to TM 4750-15/1.

(3) Inspection

(a) Inspect end plates, blower housing, and fan wheels for cracks, breaks, dents, deformation, and damage.

(b) Inspect motor shafts for nicks, burs, gouges, and damage.

(c) Inspect motor wiring for weather checking, breaks, cracks, bare spots, and damage.

(d) Inspect motor for proper operation using a 24 V power supply and a proper grounding system.

(e) Inspect threaded areas for crossed, smashed, burred, and damaged threads.

(4) Repair

(a) Repair dents or deformation using accepted sheet metal practices.

(b) Repair cracks or breaks by welding. Refer to TM 9-237 for welding applications.

(c) Replace weather checked, cracked, broken, or bare motor wiring.

(d) Repair damaged threads according to TM 2350-45.

(e) Replace heater blower assembly parts damaged beyond repair or failing inspection.

(5) Assembly

(a) Slide motor (4, Figure 2-196) in blower housing (3).

(b) Install spring clamps (9) on fan wheel (5) and slide fan wheel (5) in blower housing (3) on motor (4). Repeat for remaining fan wheel (5).

(c) Install bracket (8), washer (7), and capscrew (6) on motor (4). Tighten capscrew (6) securely.

(d) Install end plates (2) with three capscrews (1) on blower housing (3). Tighten three capscrews (1) securely. Repeat for remaining end plate (2).

b. Heater Core

(1) Disassembly. Disassemble heater core (17, Figure 2-117) only to the extent necessary for cleaning, inspection, and repair.

(2) Cleaning. Refer to Section III.

WARNING

To prevent personal injury when steam cleaning, personnel shall wear proper protective equipment conforming to OSHA Standards.

To prevent personal injury from chemical solutions when working with hot cleaning vat, wear appropriate safety equipment as governed by OSHA Standards.

WARNING

Dry cleaning solvents are flammable. Do not clean parts near an open flame or in a smoking area. Contact with skin may cause irritation or cracking. Use of rubber gloves conforming to FED SPEC ZZ-G-381, face shield conforming to L-F-36, and other protective equipment is required according to OSHA Standards.

If hot cleaning vat solution, muriatic acid, or flux enters the eyes, wash generously for 15 minutes with clean water and seek medical attention as soon as possible.

Flux, caustic solutions, and cleaning acids can cause skin irritation. Wash immediately with soap and clean water if the skin comes in contact with these chemicals.

Adding large amounts of cleaning compound to a hot cleaning vat will cause violent boiling; add small amounts slowly. Never add water to the dry compound; add the conpound to the water.

Avoid contact with 1,1,1-Trichloroethane, Dry Cleaning Solvent P-D-680, epoxy paint stripper, alkaline rust and paint remover, and phosphoric acid corrosion remover. If solution comes in contact with the skin, wash thoroughly with running water. Use of rubber gloves conforming to FED SPEC ZZ-G-381, face shield conforming to L-F-36, and other protective equipment is required according to OSHA Standards.

Effluent from chemical cleaning and coating operations is toxic and hazardous. Such operations shall comply with all applicable state and federal enviornmental regulations including Title 40, Code of Federal Regulations, Protection of the Environment.

CAUTION

To prevent damage to heater core, do not subject it to high pressure. Maintain flushing pressure under 8 psi.

NOTE

Packed sediment not removed from heater core by flushing must be boiled out by submerging heater in a tank of a boiling solution of Compound, Corrosion Removing, NSN 6850-00-935-5853 or equivalent.

Mix the Corrosion Removing Compound according to manufacturer's instructions. The length of time required to clean a heater core will be governed by the condition of the heater core and the degree of plugging.

(a) Steam clean heater core air (17) cooling fins to remove insects, dirt, and other foreign material.

(b) Alkaline clean heater core (17) to remove rust, scale, sludge, and paint.

(c) Thoroughly wash heater core (17) externally and flush internally immediately after removal from the alkaline cleaning vat.

(d) Paint heater core (17) according to TM 4750-15/1.

(3) Inspection

(a) Inspect heater core (17) for parallel fins, bent or broken tubes, and damage.

(b) Inspect all soldered seams and attachment of the inlet and outlet necks for evidence of leakage.

(c) Inspect heater core (17) inlet and outlet necks for cracks, breaks, deformation, and damage.

(d) Inspect heater core (17) tanks for cracks, breaks, rust-through conditions, deformation, and damage.

(e) Inspect for leaks as follows:

NOTE

Ensure heater core is completely dry inside before performing leak test.

Test heater core at 11 psi.

1 Close inlet neck leaving outlet neck open to affix air hose for leakage test or vice versa.

2 Submerge heater core (17) in water tank large enough to accommodate it and apply air pressure. Apply no more than 11 psi (maximum) to heater core. Watch for leaks in the form of air bubbles.

(4) Repair

(a) Repair all leaks by soldering tubes and connections according to DOD-STD-1866.

NOTE

In effecting repairs, the number of tubes removed will be held to less than 5 percent. The same applies to fin areas removed. Remaining fins will be parallel.

1 Leak(s) in flat surfaces of tanks are repaired by sweating sheet metal over source of leak(s). Refer to TM 750-254.

2 Heater core tubes that require blocking shall be blocked according to TM 750-254.

(b) Straighten and repair bent tubes and fins.

(c) Remove damaged fins that are beyond repair.

(d) After repairs are made, re-test heater core (17) as cited in b(3)(e).

(e) Replace heater core (17) damaged beyond repair or failing inspection.

(5) Assembly. Once the heater core (17) has been repaired and tested, no further assembly is necessary.

2-258. DEFROSTER DUCTS

a. Disassembly. No disassembly required.

b. Cleaning. Refer to Section III.

WARNING

Adequate ventilation shall be provided while using solvents and cleaners. Prolonged breathing of vapors should be avoided. Do not use near heat or open flame. Avoid prolonged contact with skin. Use of rubber gloves conforming to FED SPEC ZZ-G-381, face shield conforming to L-F-36, and other protective equipment is required according to OSHA Standards.

(1) Remove loose dirt with cloth or a small soft-bristled brush.

(2) Clean defroster ducts (1, 2, 3, and 4, Figure 2-118) with water and detergent conforming to MIL-D-16791. Rinse defroster ducts (1, 2, 3, and 4) thoroughly with clean water. Allow defroster ducts (1, 2, 3, and 4) to air dry thoroughly.

c. Inspection

(1) Inspect defroster ducts (1, 2, 3, and 4) for cracks, breaks, deformation, and damage.

(2) Inspect defroster ducts (1, 2, 3, and 4) for dry rot, tears, holes, and damage.

d. Repair. Replace defroster ducts (1, 2, 3, and 4) damaged beyond repair or failing inspection.

e. Assembly. No assembly required.

2-259. SEAT FRAME ASSEMBLY

a. Disassembly

(1) Remove capscrew (1, Figure 2-197) and clamp (2) from seat cushion (3) and seat frame (10).

(2) Remove capscrew (4) and clamp (5) from seat cushion (3) and seat frame (10).

(3) Remove bottom seat cushion (3) from seat frame (10).

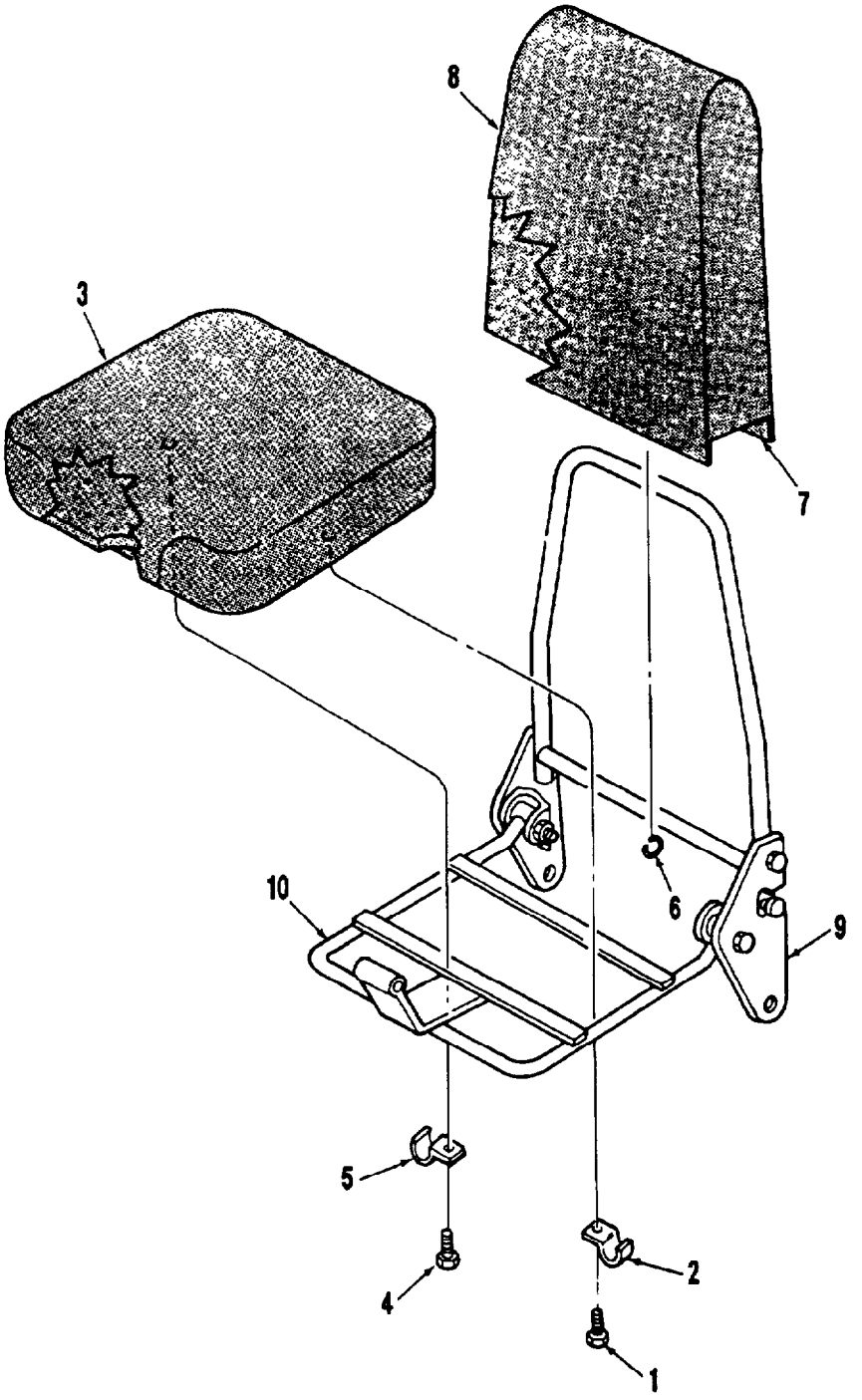

1. Capscrew
2. Clamp
3. Seat Cushion
4. Capscrew
5. Clamp
6. Hook (5)
7. Seat Back Cover
8. Seat Back Cushion
9. Seat Frame Assembly
10. Seat Frame

Figure 2-197. Seat Frame Disassembly/Assembly

(4) Remove five hooks (6) from bottom of seat back cover (7).

(5) Pull seat back cushion (8) off seat frame assembly (9).

b. Cleaning. Refer to Section III.

WARNING

To prevent personal injury when steam cleaning, personnel shall wear proper protective equipment conforming to OSHA Standards.

To prevent serious personal injury when abrasive blasting with high air pressure (120-150 psi), in open areas or confined areas, personnel shall wear full-body protective equipment conforming to OSHA Standards.

Adequate ventilation shall be provided while using solvents and cleaners. Prolonged breathing of vapors should be avoided. Do not use near heat or open flame. Avoid prolonged contact with skin. Use of rubber gloves conforming to FED SPEC ZZ-G-381, face shield conforming to L-F-36, and other protective equipment is required according to OSHA Standards.

(1) Steam clean metal seat frame assembly parts to remove dirt and grease.

(2) Abrasive blast metal seat frame assembly parts to remove paint, rust, and corrosion.

(3) Hand clean seat cushion, seat back cover, and seat back cushion using a cloth or a soft-bristled brush dampened with water (if extremely dirty, use a detergent conforming to MIL-D-16791 and water).

(4) Paint seat frame assembly according to TM 4750-15/1.

c. Inspection

(1) Inspect seat frame assembly for breaks, cracks, bends, deformation, and damage.

(2) Inspect seat frame assembly for corrosion and rust-through condition.

(3) Inspect seat frame assembly hinge and latch for freedom of movement and proper operation.

(4) Inspect seat back cushion and seat back cover for tears, holes, dry rot, mildew, and weather cracks.

(5) Inspect seat cushions for mildew, dry rot, and deterioration.

d. Repair

(1) Repair breaks and cracks by welding. Refer to TM 9-237 for welding applications.

(2) Remove minor rust and corrosion from seat frame assembly.

(3) Replace seat frame assembly with rust-through condition.

(4) Free up hinges and latch on seat frame assembly to ensure proper operation.

(5) Replace all seat covers and cushions failing inspection.

e. Assembly

(1) Install seat back cushion (8) on seat frame assembly (9).

(2) Install five hooks (6) through bottom of seat back cover (7).

(3) Position seat cushion (3) on seat frame (10).

(4) Install clamp (5) and capscrew (4) on seat frame (10) and seat cushion (3). Tighten capscrew (4) securely.

(5) Install clamp (2) and capscrew (1) on seat frame (10) and seat cushion (3). Tighten capscrew (1) securely.

2-260. SEAT BELTS

a. Disassembly. No disassembly required.

WARNING

Adequate ventilation shall be provided while using solvents and cleaners. Prolonged breathing of vapors should be avoided. Do not use near heat or open flame. Avoid prolonged contact with skin. Use of rubber gloves conforming to FED SPEC ZZ-G-381, face shield conforming to L-F-36, and other protective equipment is required according to OSHA Standards.

b. Cleaning. Refer to Section III. Clean seat belts (3, 4, 10, and 11, Figure 2-120) using a nylon scrub brush dampened with water and detergent conforming to MIL-D-16791. Rinse seat belts (3, 4, 10, and 11) thoroughly with clean water and allow to air dry.

c. Inspection

(1) Inspect seat belts (3, 4, 10, and 11) for cuts, frays, breaks, dry rot, and damage.

(2) Inspect for seat belt locking mechanism for proper operation.

(3) Inspect seat belts (3, 4, 10, and 11) for broken stitching.

d. Repair. Replace seat belts (3, 4, 10, and 11) failing inspection.

e. Assembly. No assembly required.

2-260.1. SEAT BELTS (LVSA1 SERIES VEHICLES ONLY)

a. Disassembly. No disassembly required.

WARNING

Adequate ventilation shall be provided while using solvents and cleaners. Prolonged breathing of vapors should be avoided. Do not use near heat or open flame. Avoid prolonged contact with skin. Use of rubber gloves conforming to FED SPEC ZZ-G-381, face shield conforming to L-F-36, and other protective equipment is required according to OSHA Standards.

b. Cleaning. Refer to Section III. Clean seat belts (7, Figure 120.1) and retractor unit (31) belt using a nylon scrub brush dampened with water and detergent conforming to MIL-D-16791. Rinse seat belts (7) and retractor unit (31) belt thoroughly with clean water and allow to air dry.

c. Inspection.

(1) Inspect seat belts (7) and retractor unit (31) belt for cuts, frays, breaks, dry rot, and damage.

(2) Inspect seat belt locking mechanism and retractor unit (31) for proper operation.

(3) Inspect seat belts (7) and retractor unit (31) belt for broken stitching.

d. Repair. Replace seat belts (7) and retractor unit (31) failing inspection.

e. Assembly. No assembly required.

2-261. CAB WINDOWS

a. Disassembly. No disassembly required.

WARNING

Adequate ventilation shall be provided while using solvents and cleaners. Prolonged breathing of vapors should be avoided. Do not use near heat or open flame. Avoid prolonged contact with skin. Use of rubber gloves conforming to FED SPEC ZZ-G-381, face shield conforming to L-F-36, and other protective equipment is required according to OSHA Standards.

b. Cleaning. Refer to Section III. Clean glass with glass cleaner NSN 7930-00-664-6910 or equivalent.

c. Inspection

(1) Inspect cab windows for cracks, separation, chips, and pitting in the surface of glass.

(2) Inspect cab windows for deformation and discoloration of glass.

d. Repair

(1) Replace cab windows failing inspection.

(2) Replace deteriorated, damaged, or weather checked windshield gasket.

e. Assembly. No assembly required.

2-262. WINDSHIELD WASHER RESERVOIR, HOSES, AND NOZZLES

a. Windshield Washer Reservoir

(1) Disassembly. No disassembly required.

(2) Cleaning. Refer to Section III.

WARNING

Adequate ventilation shall be provided while using solvents and cleaners. Prolonged breathing of vapors should be avoided. Do not use near heat or open flame. Avoid prolonged contact with skin. Use of rubber gloves conforming to FED SPEC ZZ-G-381, face shield conforming to L-F-36, and other protective equipment is required according to OSHA Standards.

(a) Remove loose dirt with cloth or small brush.

(b) Clean windshield washer reservoir (4, Figure 2-123) with water and detergent conforming to MIL-D-16791.

(c) Rinse windshield washer reservoir (4) thoroughly with clean water.

(d) Allow windshield washer reservoir (4) to air dry thoroughly.

(3) Inspection

(1) Inspect windshield washer reservoir (4) for cracks, breaks, deformation and damage.

(2) Inspect windshield washer reservoir (4) for holes and evidence of leakage.

(4) Repair. Replace windshield washer reservoir (4) failing inspection.

(5) Assembly. No assembly required.

b. Hoses. Replace deteriorated, damaged, or weather checked windshield washer hoses.

c. Nozzles

(1) Disassembly. No disassembly required.

(2) Cleaning. Refer to Section III.

WARNING

Dry cleaning solvents are flammable. Do not clean parts near an open flame or in a smoking area. Contact with skin may cause irritation or cracking. Use of rubber gloves conforming to FED SPEC ZZ-G-381, face shield conforming to L-F-36, and other protective equipment is required according to OSHA Standards.

Adequate ventilation shall be provided while using solvents and cleaners. Prolonged breathing of vapors should be avoided. Do not use near heat or open flame. Avoid prolonged contact with skin. Use of rubber gloves conforming to FED SPEC ZZ-G-381, face shield conforming to L-F-36, and other protective equipment is required according to OSHA Standards.

When cleaning with compressed air, regulate to 25 psi maximum. Eyeshields must be worn to prevent injury to the eyes or complete loss of sight.

(a) Hand clean nozzles (17 and 19, Figure 2-123) using a cloth dampened with Dry Cleaning Solvent, FED SPEC P-D-680 and a small wire brush.

(b) Allow nozzles (17 and 19) to air dry thoroughly.

(c) Run a thin, flexible piece of wire through nozzles (17 and 19) to ensure passages are clear.

(d) Blow off excess solvent and blow out passages using compressed air 25 psi maximum.

(3) Inspection

(a) Inspect nozzles (17 and 19) for cracks, breaks, and damage.

(b) Inspect nozzles (17 and 19) for blocked passages.

(c) Inspect nozzles (17 and 19) for rust and corrosion.

(d) Inspect threaded areas for crossed, smashed, burred, and damaged threads.

(4) Repair

(a) Repair damaged threads according to TM 2350-45.

(b) Replace nozzles (17 and 19) damaged beyond repair or failing inspection.

(5) Assembly. No assembly required.

2-263. CAB WIRING HARNESS

a. Disassembly. Disassemble wiring harness as necessary to effect repairs.

WARNING

Adequate ventilation shall be provided while using solvents and cleaners. Prolonged breathing of vapors should be avoided. Do not use near heat or open flame. Avoid prolonged contact with skin. Use of rubber gloves conforming to FED SPEC ZZ-G-381, face shield conforming to L-F-36, and other protective equipment is required according to OSHA Standards.

b. Cleaning. Refer to Section III. Clean cab wiring harness as required. Do not soak in solvent, but clean with a cloth or soft-bristled brush dampened with Isopropyl Alcohol, FED SPEC TT-I-735.

c. Inspection

(1) Inspect cab wiring harness leads for damaged connectors, wires, pins, or deteriorated, cracked or swelled grommets.

(2) Inspect rubber covering for weather checks and cracks.

(3) Inspect taped area of cab wiring harness for loose, frayed, oil-soaked, and torn condition.

(4) Inspect terminal and connector ends for loose condition.

(5) Check cab wiring harness for continuity using a volt/ohm meter. Refer to TM 2320-20/12 for wiring diagram.

d. Repair

(1) Replace or repair damaged connectors, pins, and grommets as necessary.

(2) Replace defective wires as necessary.

(3) Replace illegible circuit tags.

(4) Tape defective areas of harness as necessary, using Tape, Insulating, Electrical, MIL-I-15126, NSN 5970-00-419-3164 or equivalent.

e. Assembly. Assemble wiring harness as necessary.

2-264. HYDRAULIC PUMP PROPELLER SHAFT

a. Disassembly

NOTE

Replace universal joints (1 and 2, Figure 2-198) in pairs.

(1) Remove four snaprings (3) from end yokes (5 and 6).

(2) Remove four bearing caps (4) from universal joint (1 or 2).

(3) Remove universal joint (1) from end yokes (5 and 6).

(4) Repeat steps (1) through (3) for universal joint (2).

(5) Remove dust cap (7) from sleeve (8) by unscrewing dust cap (7) in a counter-clockwise direction.

(6) Slide splined shaft (9) out of sleeve (8) end.

(7) Remove cork washer (10), steel washer (11), and dust cap (7) from splined shaft (9).

b. Cleaning. Refer to Section III.

WARNING

Dry cleaning solvents are flammable. Do not clean parts near an open flame or in a smoking area. Contact with skin may cause irritation or cracking. Use of rubber gloves conforming to FED SPEC ZZ-G-381, face shield conforming to L-F-36, and other protective equipment is required according to OSHA Standards.

Adequate ventilation shall be provided while using solvents and cleaners. Prolonged breathing of vapors should be avoided. Do not use near heat or open flame. Avoid prolonged contact with skin. Use of rubber gloves conforming to FED SPEC ZZ-G-381, face shield conforming to L-F-36, and other protective equipment is required according to OSHA Standards.

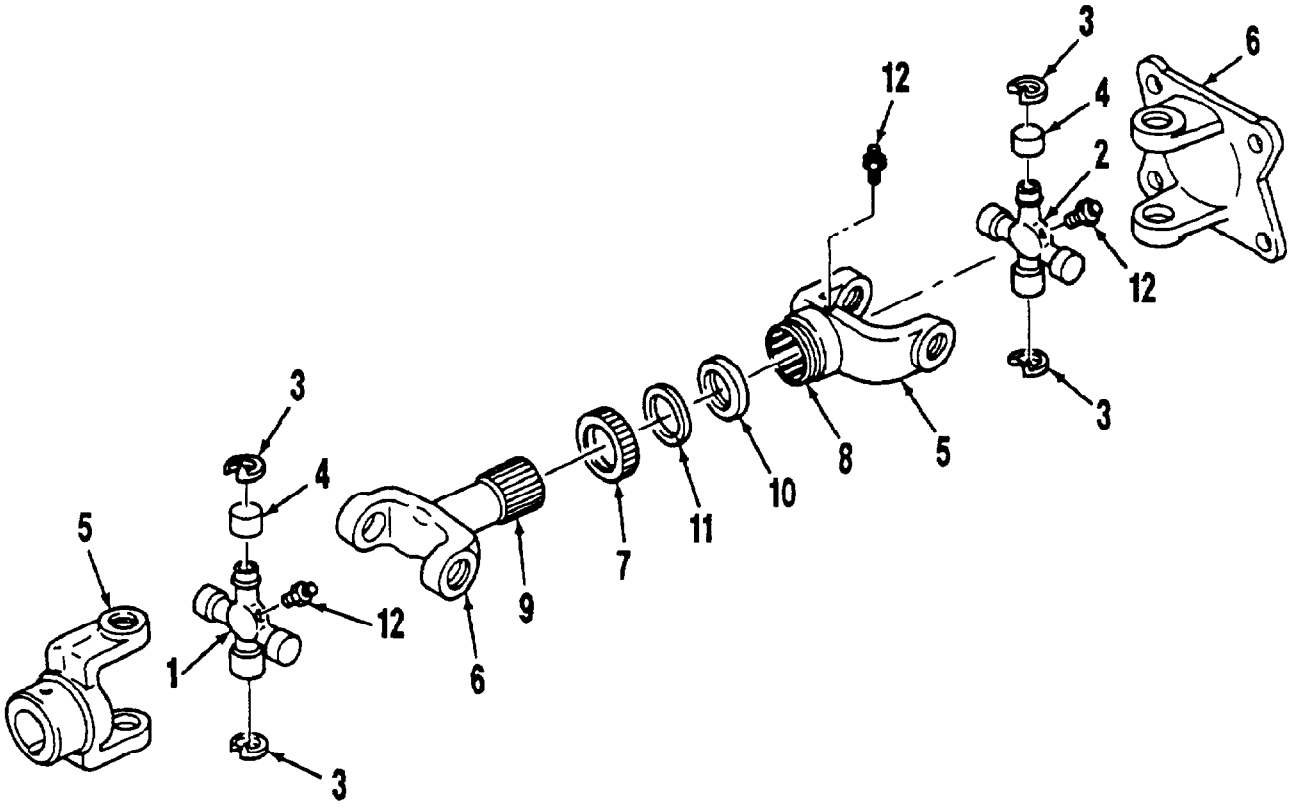

1. Universal Joint
2. Universal Joint
3. Snapring (8)
4. Bearing Cap (8)
5. End Yoke (2)
6. End Yoke (2)
7. Dust Cap
8. Sleeve
9. Splined Shaft
10. Cork Washer
11. Steel Washer
12. Grease Fitting

Figure 2-198. Hydraulic Pump Propeller Shaft Disassembly/Assembly

WARNING

When cleaning with compressed air, regulate to 25 psi maximum. Eyeshields must be worn to prevent injury to the eyes or complete loss of sight.

(1) Remove grease and loose dirt with cloth or brush.

(2) Solvent clean hydraulic pump propeller shaft parts with Dry Cleaning Solvent, P-D-680.

(3) Blow off excess solvent using compressed air 25 psi maximum and allow hydraulic pump propeller shaft parts to dry thoroughly.

c. Inspection

(1) Inspect hydraulic pump propeller shaft parts for cracks, breaks, and damage.

(2) Inspect splines for rolling, peening, nicks, gouges, and burs.

(3) Inspect threaded areas for crossed, smashed, burred, and damaged threads.

d. Repair

(1) Remove nicks or burs with a file.

(2) Repair damaged threads according to TM 2350-45.

(3) Replace hydraulic pump propeller shaft parts damaged beyond repair or failing inspection.

e. Assembly

(1) Insert splined shaft (9, Figure 2-198) through dust cap (7), steel washer (11), cork washer (10), and slide splined shaft (9) in end of sleeve (8).

(2) Thread dust cap (7) on sleeve end (8).

NOTE

Position universal joints (1 and 2) so grease fittings (12) are facing the same way.

(3) Install universal joint (1) in end yokes (5 and 6).

(4) Install four bearing caps (4) on universal joint (1 or 2).

(5) Install four snaprings (3) in end yokes (5 and 6).

(6) Repeat steps (3) through (5) for remaining universal joint (1 or 2).

2-265. HYDRAULIC PUMP. Refer to TM 2320-34/13 for disassembly, cleaning, inspection, repair, and assembly of hydraulic pump (5, Figure 2-125).

2-266. PROPELLER SHAFT - TRANSMISSION TO TRANSFER CASE. Refer to TM 2320-20/12 for disassembly, cleaning, inspection, repair, and assembly of propeller shaft - transmission to transfer case.

2-267. ACCUMULATOR

a. Disassembly

(1) Remove valve guard (2, Figure 2-199) from accumulator tank (1).

(2) Remove cap (3) from valve core body (4).

(3) Remove high pressure valve core (5) from valve core body (4).

(4) Remove valve core body (4) from accumulator tank (1).

(5) Remove nameplate (6) from accumulator tank (1).

(6) Remove warning tag (7) from accumulator tank (1) if necessary.

(7) Remove safety plug (8) from accumulator tank (1).

b. Cleaning. Refer to Section III.

WARNING

To prevent personal injury when steam cleaning, personnel shall wear proper protective equipment conforming to OSHA Standards.

To prevent serious personal injury when abrasive blasting with high air pressure (120-150 psi), in open areas or confined areas, personnel shall wear full-body protective equipment conforming to OSHA Standards.

Adequate ventilation shall be provided while using solvents and cleaners. Prolonged breathing of vapors should be avoided. Do not use near heat or open flame. Avoid prolonged contact with skin. Use of rubber gloves conforming to FED SPEC ZZ-G-381, face shield conforming to L-F-36, and other protective equipment is required according to OSHA Standards.

CAUTION

To prevent water or abrasive particles from entering accumulator tank, plug all openings before cleaning.

(1) Steam clean accumulator tank to remove dirt and grease.

(2) Abrasive blast accumulator tank to remove paint, rust, and corrosion.

(3) Paint accumulator tank according to TM 4750-15/1.

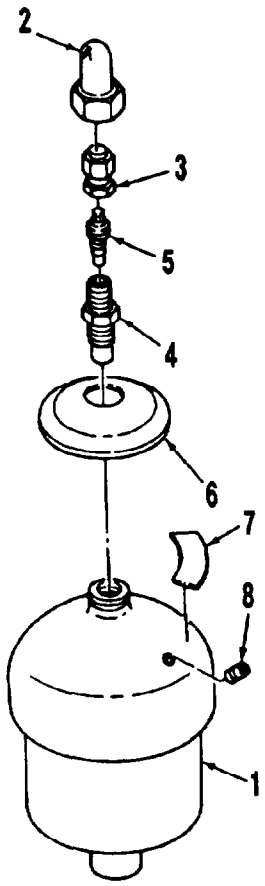

1. Accumulator Tank
2. Valve Guard
3. Cap
4. Valve Core Body
5. High Pressure Valve Core
6. Nameplate
7. Warning Tag
8. Safety Plug

Figure 2-199. Accumulator Disassembly/Assembly

c. Inspection

NOTE

The accumulator will have to be tested on vehicle with hydraulic system fully functional. Refer to TM 2320-34/13 for accumulator service procedures.

(1) Inspect accumulator tank for cracks, breaks, deformation, and damage.

(2) Inspect threaded areas for crossed, smashed, burred, and damaged threads.

(3) Inspect nameplate and warning tag for accurate and legible information.

(4) Inspect interior of accumulator tank for rust and corrosion.

d. Repair

(1) Repair damaged threads according to TM 2350-45.

(2) Replace accumulator tank damaged beyond repair or failing inspection.

e. Assembly

NOTE

Apply Pipe Sealant, Loctite 592 or equivalent to accumulator-tank- threads of valve core body. Do not apply sealant to first thread.

(1) Install safety plug (8) in accumulator tank (1). Tighten safety plug (8) securely.

(2) Install warning tag (7) on accumulator tank (1).

(3) Install nameplate (6) on accumulator tank (1).

(4) Install valve core body (4) in accumulator tank (1). Tighten valve core body (4) securely.

(5) Install high pressure valve core (5) in valve core body (4). Tighten high pressure valve core (5) securely.

(6) Install cap (3) on valve core body (4). Tighten cap (3) securely.

(7) Install valve guard (2) on accumulator tank (1). Tighten valve guard (2) securely.

2-267.1. ACCUMULATOR (LVSA1 SERIES VEHICLES ONLY)

a. Dissassembly. Accumulator tank is non-repairable.

b. Cleaning. Refer to Section III.

WARNING

To prevent personal injury when steam cleaning, personnel shall wear proper protective equipment conforming to OSHA Standards.

WARNING

To prevent serious personal injury when abrasive blasting with high air pressure (120-150 psi), in open areas or cofined areas, personnel shall wear full-body protective equipment conforming to OSHA Standards.

Adequate ventilation shall be provided while using solvents and cleaners. Prolonged breathing of vapors should be avoided. Do not use near heat or open flame. Avoid prolonged contact with skin. Use of rubber gloves conforming to FED SPEC ZZ-G-381, face shield conforming to L-F-36, and other protective equipment is required according to OSHA Standards.

(1) Steam clean accululator tank to remove dirt and grease.

(2) Abrasive blast accumulator tank to remove paint, rust and corrosion.

(3) Paint accumulator tank according to TM 4750-15/1.

c. Inspection

NOTE

The accumulator will have to be tested on vehicle with hydraulic system fully functional. Refer to TM 2320-34/13 for accumulator service procedures.

(1) Inspect accumulator tank for cracks, breaks, deformation, and damage.

(2) Inspect threaded area for crossed, smashed, burred, and damaged threads.

d. Repair

(1) Replace accumulator tank damaged or failing inspection.

e. Assembly. None required.

2-268. FAN CONTROL RELIEF/UNLOAD VALVE

a. Disassembly

CAUTION

To prevent parts damage, do not disturb settings of nut (1, Figure 2-200) and adjustment screw (2).

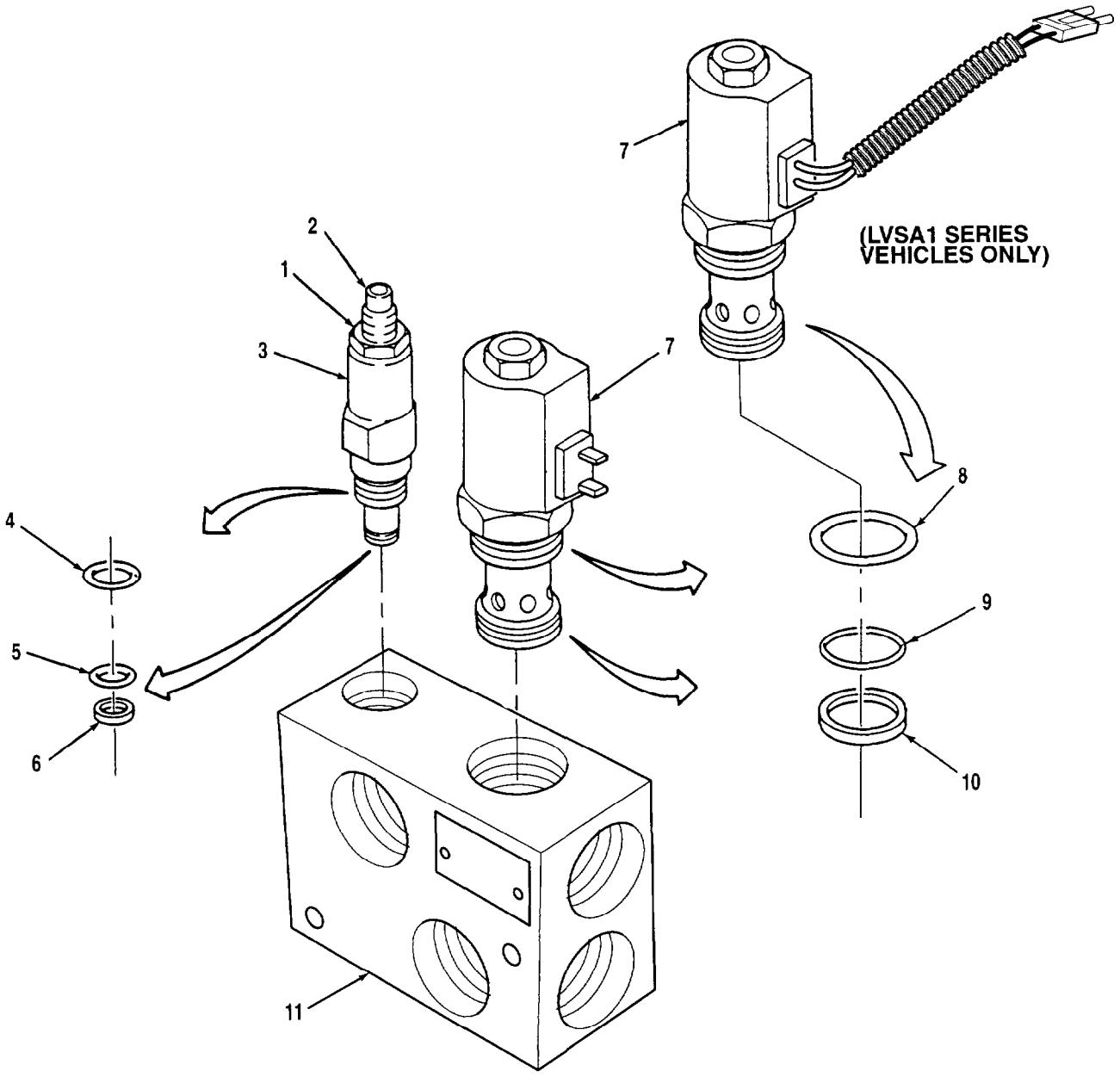

1. Nut
2. Adjustment Screw
3. Relief Valve Assembly
4. O-Ring
5. O-Ring
6. Backup Ring
7. Solenoid Valve Assembly
8. O-Ring
9. O-Ring
10. Backup Ring
11. Valve Body

Figure 2-200. Fan Control Relief/Unload Valve Disassembly/Assembly

(1) Remove relief valve assembly (3, Figure 2-200) from valve body (11).

(2) Remove O-rings (4 and 5) and backup ring (6). Discard O-rings (4 and 5) and backup ring (6).

(3) Remove solenoid valve assembly (7) from valve body (11).

(4) Remove O-rings (8 and 9) and backup ring (10). Discard O-rings (8 and 9) and backup ring (10).

b. Cleaning. Refer to Section III.

WARNING

Dry cleaning solvents are flammable. Do not clean parts near an open flame or in a smoking area. Contact with skin may cause irritation or cracking. Use of rubber gloves conforming to FED SPEC ZZ-G-381, face shield conforming to L-F-36, and other protective equipment is required according to OSHA Standards.

Adequate ventilation shall be provided while using solvents and cleaners. Prolonged breathing of vapors should be avoided. Do not use near heat or open flame. Avoid prolonged contact with skin. Use of rubber gloves conforming to FED SPEC ZZ-G-381, face shield conforming to L-F-36, and other protective equipment is required according to OSHA Standards.

When cleaning with compressed air, regulate to 25 psi maximum. Eyeshields must be worn to prevent injury to the eyes or complete loss of sight.

(1) Remove grease and loose dirt from valve body, relief valve assembly, and solenoid valve assembly with cloth or small wire brush.

(2) Solvent clean valve body with Dry Cleaning Solvent, P-D-680.

(3) Blow off excess solvent using compressed air 25 psi maximum and allow valve body to dry thoroughly.

(4) Clean relief valve assembly and solenoid valve assembly using Isopropyl Alcohol, FED SPEC TT-I-735. Allow them to air dry thoroughly.

c. Inspection

(1) Inspect valve body for cracks, breaks, and damage.

(2) Inspect valve body for nicks, gouges, and burs.

(3) Inspect threaded areas for crossed, smashed, burred, and damaged threads.

(4) Inspect relief valve assembly for cracks, breaks, and damage.

(5) Inspect solenoid valve assembly for cracks, breaks, and damage.

(6) Inspect solenoid valve assembly for bent, twisted, and damaged electrical connectors.

d. Repair

(1) Remove nicks or burs from valve body with a file.

(2) Repair damaged threads according to TM 2350-45.

(3) Straighten electrical connectors on solenoid valve assembly (7) if possible.

(4) Replace relief valve assembly or solenoid valve assembly damaged beyond repair or failing inspection.

e. Assembly

NOTE

Coat all O-rings with clean hydraulic oil during installation.

(1) Install new O-rings (8 and 9) and backup ring (10) on solenoid valve assembly (7).

(2) Install solenoid valve assembly (7) in valve body (11). Tighten solenoid valve assembly (7) securely,

(3) Install new O-rings (4 and 5) and backup ring (6) on relief valve assembly (3).

(4) Install relief valve assembly (3) in valve body (11). Tighten relief valve assembly (3) securely.

2-269. COOLANT FILTER AND ADAPTER

a. Disassembly. No disassembly required.

b. Cleaning. Refer to Section III.

WARNING

Dry cleaning solvents are flammable. Do not clean parts near an open flame or in a smoking area. Contact with skin may cause irritation or cracking. Use of rubber gloves conforming to FED SPEC ZZ-G-381, face shield conforming to L-F-36, and other protective equipment is required according to OSHA Standards.

Adequate ventilation shall be provided while using solvents and cleaners. Prolonged breathing of vapors should be avoided. Do not use near heat or open flame. Avoid prolonged contact with skin. Use of rubber gloves conforming to FED SPEC ZZ-G-381, face shield conforming to L-F-36, and other protective equipment is required according to OSHA Standards.

(1) Remove loose dirt from coolant filter adapter parts with cloth or small brush.

(2) Solvent clean coolant filter adapter parts using Dry Cleaning Solvent, P-D-680. Blow off excess solvent using compressed air 25 psi maximum. Allow dry thoroughly.

(3) Blow out all passages in coolant filter adapter and fittings using compressed air 25 psi maximum to remove any dirt or blockage.

c. Inspection

(1) Inspect coolant filter adapter and fittings for cracks, breaks, and damage.

(2) Inspect shut-off valves for cracks, breaks, proper operation, and damage.

(3) Inspect bracket for cracks, breaks, deformation, and damage.

(4) Inspect threaded areas for crossed, smashed, burred, and damaged threads.

d. Repair

(1) Repair damaged threads according to TM 2350-45.

(2) Repair bent or deformed bracket using accepted sheet metal practices.

(3) Repair cracked or broken bracket by welding. Refer to TM 9-237 for welding applications.

(4) Replace coolant filter adapter parts damaged beyond repair or failing inspection.

(5) Replace coolant filter as required.

e. Assembly. No assembly required.

2-270. POWER PACK. Refer to TM 2320-20/12 and TM 2320-34/13 for disassembly, cleaning, inspection, repair, and assembly of power pack.

2-271. VEHICLE STEP, SPLASH GUARDS, AND FENDER RUBBERS

a. Vehicle Step

(1) Disassembly. No disassembly required.

(2) Cleaning. Refer to Section III.

WARNING

To prevent personal injury when steam cleaning, personnel shall wear proper protective equipment conforming to OSHA Standards.

To prevent serious personal injury when abrasive blasting with high air pressure (120-150 psi), in open areas or confined areas, personnel shall wear full-body protective equipment conforming to OSHA Standards.

WARNING

Adequate ventilation shall be provided while using solvents and cleaners. Prolonged breathing of vapors should be avoided. Do not use near heat or open flame. Avoid prolonged contact with skin. Use of rubber gloves conforming to FED SPEC ZZ-G-381, face shield conforming to L-F-36, and other protective equipment is required according to OSHA Standards.

(a) Steam clean vehicle step (5, Figure 2-129) to remove dirt and grease.

(b) Abrasive blast vehicle step (5) to remove paint, rust, and corrosion.

(c) Paint vehicle step (5) according to TM 4750-15/1.

(3) Inspection

(a) Inspect vehicle step (5) for cracks, breaks, and broken welds.

(b) Inspect vehicle step (5) for bends and deformation.

(4) Repair

(a) Straighten bent or deformed areas.

(b) Repair cracks and breaks by welding. Refer to TM 9-237 for welding applications.

(c) Replace vehicle step (5) damaged beyond repair or failing inspection.

(5) Assembly. No assembly required.

b. Splash Guards

(1) Disassembly. No disassembly required.

(2) Cleaning. Refer to Section III.

WARNING

To prevent personal injury when steam cleaning, personnel shall wear proper protective equipment conforming to OSHA Standards.

To prevent serious personal injury when abrasive blasting with high air pressure (120-150 psi), in open areas or confined areas, personnel shall wear full-body protective equipment conforming to OSHA Standards.

Adequate ventilation shall be provided while using solvents and cleaners. Prolonged breathing of vapors should be avoided. Do not use near heat or open flame. Avoid prolonged contact with skin. Use of rubber gloves conforming to FED SPEC ZZ-G-381, face shield conforming to L-F-36, and other protective equipment is required according to OSHA Standards.

(a) Steam clean splash guard (4, Figure 2-130) to remove dirt and grease.

(b) Abrasive blast metal splash guard parts to remove paint, rust, and corrosion.

(c) Paint metal splash guard parts according to TM 4750-15/1.

(3) Inspection

(a) Inspect splash guard (4) for cracks, breaks, holes, tears, and damage.

(b) Inspect metal splash guard parts for bends, breaks, cracks, and deformation.

(4) Repair

(a) Straighten bent or deformed areas of metal splash guard (4) parts if possible.

(b) Replace splash guard parts damaged beyond repair or failing inspection.

(5) Assembly. No assembly required.

c. Fender Rubbers

(1) Disassembly. No disassembly required.

(2) Cleaning. Refer to Section III.

WARNING

To prevent personal injury when steam cleaning, personnel shall wear proper protective equipment conforming to OSHA Standards.

To prevent serious personal injury when abrasive blasting with high air pressure (120-150 psi), in open areas or confined areas, personnel shall wear full-body protective equipment conforming to OSHA Standards.

Adequate ventilation shall be provided while using solvents and cleaners. Prolonged breathing of vapors should be avoided. Do not use near heat or open flame. Avoid prolonged contact with skin. Use of rubber gloves conforming to FED SPEC ZZ-G-381, face shield conforming to L-F-36, and other protective equipment is required according to OSHA Standards.

(a) Steam clean fender rubbers (11 and 12, Figure 2-130) to remove dirt and grease.

(b) Abrasive blast metal fender-rubber parts to remove paint, rust, and corrosion.

(c) Paint metal fender-rubber parts according to TM 4750-15/1.

(3) Inspection

(a) Inspect fender rubbers (11 and 12) for cracks, breaks, holes, tears, and damage.

(b) Inspect metal fender-rubber parts for bends, breaks, cracks, and deformation.

(4) Repair

(a) Straighten bent or deformed areas of metal fender-rubber parts if possible.

(b) Replace fender-rubber parts damaged beyond repair or failing inspection.

(5) Assembly. No assembly required.

2-272. WHEEL CHOCK RACK, TOOL STOWAGE BOX, AND FENDERS

a. Wheel Chock Rack

(1) Disassembly. No disassembly required.

(2) Cleaning. Refer to Section III.

WARNING

To prevent personal injury when steam cleaning, personnel shall wear proper protective equipment conforming to OSHA Standards.

To prevent serious personal injury when abrasive blasting with high air pressure (120-150 psi), in open areas or confined areas, personnel shall weal full-body protective equipment conforming to OSHA Standards.

Adequate ventilation shall be provided while using solvents and cleaners. Prolonged breathing of vapors should be avoided. Do not use near heat or open flame. Avoid prolonged contact with skin. Use of rubber gloves conforming to FED SPEC ZZ-G-381, face shield conforming to L-F-36, and other protective equipment is required according to OSHA Standards.

(a) Steam clean wheel chock rack (3, Figure 2-131) to remove dirt and grease.

(b) Abrasive blast wheel chock rack (3) to remove paint, rust, and corrosion.

(c) Paint wheel chock rack (3) according to TM 4750-15/1.

(3) Inspection. Inspect wheel chock rack (3) for cracks, breaks, deformation, and broken welds.

(4) Repair

(a) Straighten deformed or bent wheel chock rack (3) if possible.

(b) Repair cracks, breaks, or broken welds by welding. Refer to TM 9-237 for welding applications.

(c) Replace wheel chock rack (3) damaged beyond repair or failing inspection.

(5) Assembly. No assembly required.

b. Tool Stowage Box

(1) Disassembly. No disassembly required.

(2) Cleaning. Refer to Section III.

WARNING

To prevent personal injury when steam cleaning, personnel shall wear proper protective equipment conforming to OSHA Standards.

To prevent serious personal injury when abrasive blasting with high air pressure (120-150 psi), in open areas or confined areas, personnel shall wear full-body protective equipment conforming to OSHA Standards.

Adequate ventilation shall be provided while using solvents and cleaners. Prolonged breathing of vapors should be avoided, Do not use near heat or open flame. Avoid prolonged contact with skin. Use of rubber gloves conforming to FED SPEC ZZ-G-381, face shield conforming to L-F-36, and other protective equipment is required according to OSHA Standards.

(a) Steam clean tool stowage box (9) to remove dirt and grease.

(b) Abrasive blast tool stowage box (9) to remove paint, rust, and corrosion.

(c) Paint tool stowage box (9) according to TM 4750-15/1.

(3) Inspection

(a) Inspect tool stowage box (9) for cracks, breaks, and broken welds.

(b) Inspect tool stowage box (9) for bends, dents, deformation, and damage.

(c) Inspect tool stowage box (9) latch for serviceability.

(4) Repair

(a) Straighten deformed or bent tool stowage box (9) using accepted sheet metal practices.

(b) Repair cracks, breaks, or broken welds by welding. Refer to TM 9-237 for welding applications.

(c) Replace tool stowage box (9) latch failing inspection.

(d) Replace tool stowage box (9) damaged beyond repair or failing inspection.

(5) Assembly. No assembly required.

c. Fenders

(1) Disassembly. No disassembly required.

(2) Cleaning. Refer to Section III.

WARNING

To prevent personal injury when steam cleaning, personnel shall wear proper protective equipment conforming to OSHA Standards,

To prevent serious personal injury when abrasive blasting with high ail pressure (120-150 psi). in open areas or confined areas, personnel shall wear full-body protective equipment conforming to OSHA Standards.

Adequate ventilation shall be provided while using solvents and cleaners. Prolonged breathing of vapors should be avoided. Do not use near heat or open flame. Avoid prolonged contact with skin. Use of rubber gloves conforming to FED SPEC ZZ-G-381, face shield conforming to L-F-36, and other protective equipment is required according to OSHA Standards.

(a) Steam clean fenders (4 and 5, Figure 2-132) to remove dirt and grease.

(b) Abrasive blast fenders (4 and 5) to remove paint, rust, and corrosion.

(c) Paint fenders (4 and 5) according to TM 4750-15/1.

(3) Inspection

(a) Inspect fenders (4 and 5) for cracks, breaks, and broken welds.

(b) Inspect fenders (4 and 5) for bends, dents, deformation, and damage.

(4) Repair

(a) Straighten deformed or bent fenders (4 and 5) using accepted sheet metal practices.

(b) Repair cracks, breaks, or broken welds by welding. Refer to TM 9-237 for welding applications.

(c) Replace fenders (4 and 5) damaged beyond repair or failing inspection.

(5) Assembly. No assembly required.

2-273. PILLOW BLOCK ASSEMBLY

a. Disassembly

(1) Place shaft assembly (12, Figure 2-133) in soft-jawed vise.

(2) Unscrew dust cap (17) from slip yoke (11) and slide dust cap (17), washer (18), and packing (19) back on shaft (20).

(3) Matchmark slip yoke (11) to shaft (20).

(4) Remove slip yoke (11) from shaft (20).

(5) Remove packing (19), washer (18), and dust cap (17) from shaft (20). Discard packing (19).

(6) Remove two Allen screws (21) from pillow block bearing (22).

NOTE

It may be necessary to use a press to remove pillow block bearing from shaft.

(7) Tag and remove pillow block bearing (22) from shaft (20).

(8) Remove two Allen screws (23).

(9) Tag and remove pillow block bearing (24) from shaft (20).

(10) Remove grease fittings (25), if damaged, from pillow block bearings (22 and 24).

b. Cleaning. Refer to Section III.

WARNING

To prevent personal injury when steam cleaning, personnel shall wear proper protective equipment conforming to OSHA Standards.

To prevent serious personal injury when abrasive blasting with high air pressure (120-150 psi), in open areas or confined areas, personnel shall wear full-body protective equipment conforming to OSHA Standards.

Adequate ventilation shall be provided while using solvents and cleaners. Prolonged breathing of vapors should be avoided. Do not use near heat or open flames. Avoid prolonged contact with skin. Use of rubber gloves conforming to FED SPEC ZZ-G-381, face shield conforming to FED SPEC L-F-36, and other protective equipment is required according to OSHA Standards.

CAUTION

To prevent damage to pillow block bearing, plug all openings before steam cleaning, abrasive blasting, and painting.

(1) Steam clean pillow block assembly parts to remove dirt and grease.

(2) Abrasive blast pillow block assembly parts to remove paint, rust, and corrosion.

(3) Paint pillow block assembly parts according to TM 4750-15/1.

c. Inspection

(1) Inspect shaft (20, Figure 2-133) for cracks, breaks, and damage.

(2) Inspect splined areas for rolled, peened, burred, nicked, and gouged splines.

(3) Inspect threaded areas for crossed, smashed, burred, and damaged threads.

(4) Inspect slip yoke (11) for cracks, breaks, wear, and damage.

(5) Inspect flange (2) for cracks, breaks, wear, and damage.

(6) Inspect for damaged mounting hardware.

(7) Inspect pillow block bearings (22 and 24) for roughness and damage.

d. Repair

(1) Repair threaded areas according to TM 2350-45.

(2) Replace pillow block assembly parts damaged beyond repair or failing inspection.

e. Assembly

NOTE

If pillow block bearing is reused, it shall be installed in its original position.

(1) Place shaft (20) in soft-jawed vise with threaded end up.

(2) Install pillow block bearing (24) on shaft (20) with long side of bearing (24) facing up.

(3) Install two Allen screws (23) in pillow block bearing (24). Tighten Allen screws (23) securely.

(4) Install companion flange (2, Figure 2-133) on shaft (20) until seated against pillow block bearing (24).

(5) Install washer (7) and new locknut (6). Do not tighten locknut (6) at this time.

(7) Install pillow block bearing (22) on shaft (20) with long side of bearing (22) facing up.

(8) Install two Allen screws (21) in pillow block bearing (22). Tighten Allen screws (21) securely.

(9) Slide dust cap (17), washer (18), and new packing (19) on shaft (20).

(10) Align matchmarks made during disassembly and install slip yoke (11) on shaft (20).

(11) Install new packing (19), washer (18), and dust cap (17) on slip yoke (11). Hand tighten dust cap (17).

(12) Install two grease fittings (25), if removed, in pillow block bearings (22 and 24).

2-274. CARDAN JOINT

a. Disassembly

(1) Matchmark universal joints (10, Figure 2-134) to center plate (11).

(2) Remove four capscrews (12) from center plate (11) and universal joint (10).

(3) Remove universal joint (10) from center plate (11).

(4) Remove four capscrews (13) from center plate (11) and universal joint cap (14).

(5) Remove universal joint (10) from center plate (11).

b. Cleaning. Refer to Section III.

WARNING

To prevent personal injury when steam cleaning, personnel shall wear proper protective equipment conforming to OSHA Standards.

To prevent serious personal injury when abrasive blasting with high air pressure (120-150 psi), in open areas or confined areas, personnel shall wear full-body protective equipment conforming to OSHA Standards.

Dry cleaning solvents are flammable. Do not clean parts near an open flame or in a smoking area. Contact with skin may cause irritation or cracking. Use of rubber gloves conforming to FED SPEC ZZ-G-381, face shield conforming to L-F-36, and other protective equipment is required according to OSHA Standards.

Adequate ventilation shall be provided while using solvents and cleaners. Prolonged breathing d vapors should be avoided. Do not use near heat or open flames. Avoid prolonged contact with skin. Use of rubber gloves conforming to FED SPEC ZZ-G-381, face shield conforming to FED SPEC L-F-36, and other protective equipment is required according to OSHA Standards.

(1) Steam clean Cardan joint (4, Figure 2-134) parts to remove dirt and grease.

(2) Abrasive blast Cardan joint center plate (11) to remove paint, rust, and corrosion.

(3) Clean universal joints (10) using cloth or wire blush dampened with Dry Cleaning Solvent, P-D-680.

(4) Paint Cardan joint (4) parts according to TM 4750-15/1.

c. Inspection

(1) Inspect center plate (11) for cracks, breaks, burrs, signs of wear, and damage.

(2) Inspect universal joints (10) for cracks, breaks, signs of wear, and damage.

(3) Inspect universal joint caps (14) for broken needle bearings and damage.

(4) Inspect threaded areas for crossed, smashed, burred, and damaged threads.

d. Repair

(1) Repair threaded areas according to TM 2350-45.

(2) Replace Cardan joint (4) parts damaged beyond repair or failing inspection.

e. Assembly

NOTE

If universal joint is being reused, install it in its original position.

(1) Align matchmarks made during disassembly and install universal joint (10) on center plate (11) with four capscrews (13). Torque capscrews (13) to 108 ft-lb (146.5 N·m).

(2) Align matchmarks made during disassembly and install universal joint (10) on center plate (11) with four capscrews (12). Torque capscrews (12) to 108 ft-lb (146.5 N·m).

2-275. PROPELLER SHAFTS AND UNIVERSAL JOINTS. Refer to TM 2320-20/12 for disassembly, cleaning, inspection, repair, and assembly of propeller shafts (5, Figure 2-135) and universal joints (5, Figure 2-136).

2-276. TRANSFER CASE. Refer to TM 2320-34/13 for disassembly, cleaning, inspection, repair and assembly of transfer case (4, Figure 2-137, Sheet 1 of 4).

2-277. DRAG LINKS

a. Disassembly

NOTE

This procedure works for upper and lower drag links.

(1) Remove clamping capscrews (8, figure 2-138) and nut (9) from clamp (10).

(2) Unscrew adjustable socket assembly (5) from upper and lower drag link assemblies (6 and 7).

(3) Remove grease fittings (11), if damaged, from socket assemblies (4 and 5).

(3.1) Remove dust covers (11.1 and 11.2), if damaged, from socket assemblies (4 and 5).

b. Cleaning. Refer to Section III.

WARNING

To prevent personal injury when steam cleaning, personnel shall wear proper protective equipment conforming to OSHA Standards.

To prevent serious personal injury when abrasive blasting with high air pressure (120-150 psi), in open areas or confined areas, personnel shall wear full-body protective equipment conforming OSHA Standards.

Adequate ventilation shall be provided while using solvents and cleaners. Prolonged breathing of vapors should be avoided. Do not use near heat or open flames. Avoid prolonged contact with skin. Use of rubber gloves conforming to FED SPEC ZZ-G-381, face shield conforming to FED SPEC L-F-36, and other protective equipment is required according to OSHA Standards.

(1) Steam clean drag link assemblies (6 and 7, Figure 2-138) to remove dirt and grease.

(1.1) Clean inside of dust covers (11.1 and 11.2) to remove grease and dirt. ■

(2) Abrasive blast drag link assemblies (6 and 7) to remove paint, rust and corrosion.

(3) Paint drag link assemblies (6 and 7) according to TM 4750-15/1.

c. Inspection

(1) Inspect drag link assemblies (6 and 7) for cracks, breaks, and damage.

(2) Inspect drag link assemblies (6 and 7) for bends, dents, and deformation.

(3) Inspect threaded areas for crossed, smashed, burred, and damaged threads.

d. Repair

(1) Repair threads according to TM 2350-45.

(2) Replace drag link assemblies (6 and 7) damaged beyond repair or failing inspection.

e. Assembly

NOTE

Adjustment for drag link assemblies (6 and 7) is the same except as noted.

Socket assemblies can be screwed in or out of drag link as needed to get proper length.

NOTE

Measure distance from center of socket assembly (4) to center of socket assembly (5) to get proper length.

Socket assemblies on drag link assembly (6) face opposite each other.

Socket assemblies on drag link assemblies (7) are at 90° angles to each other.

(1) Install grease fittings, if removed.

(2) Install dust covers (11.1 and 11.2), if removed, to socket assemblies (4 and 5).

(3) Coat threads of socket assemblies (4 and 5) with anti-sieze compound, and install in ends of drag link assemblies (6 and 7).

(4) Adjust drag link assembly (6) to a length of 30 in (76.2 cm).

(5) Adjust drag link assembly (7) to a length of 28 in (71.1 cm).

(6) Snug clamp (10) with clamping capscrew (8) and nut (9). Do not tighten nut (9) at this time.

2-278. FUSE LINK ASSEMBLY

a. Disassembly

(1) Remove nut (5, Figure 2-201) and capscrew (4) from clamp (6).

(2) Turn socket assembly (1) out of fuse link rod (7).

(3) Remove clamp (6) from fuse link rod (7).

(4) Loosen and remove hose clamps (8 and 9) from boot (10).

(5) Slide boot (10) off fuse link housing (11) and fuse link rod (7).

(6) Secure fuse link housing (11) in vise.

(7) Remove four locknuts (13) and Allen head capscrews (12) from fuse link cover (3) and fuse link housing (11). Discard locknuts (13).

(8) Remove fuse link cover (3) from fuse link housing (11).

(9) Slide fuse link spacer (14) out of fuse link housing (11).

(10) Remove setscrew (15) and pellet (16) from adjusting collar (17).

(11) While assistant pulls fuse link rod (7) to compress spring (18), unscrew adjusting collar (17) from fuse link rod (7).

(12) Release fuse link rod (7) slowly to release tension on spring (18).

(13) Slide adjusting collar (17) off fuse link rod (7).

(14) Slide fuse link rod (7) with spring cap (19) and spring (18) out of fuse link housing (11).

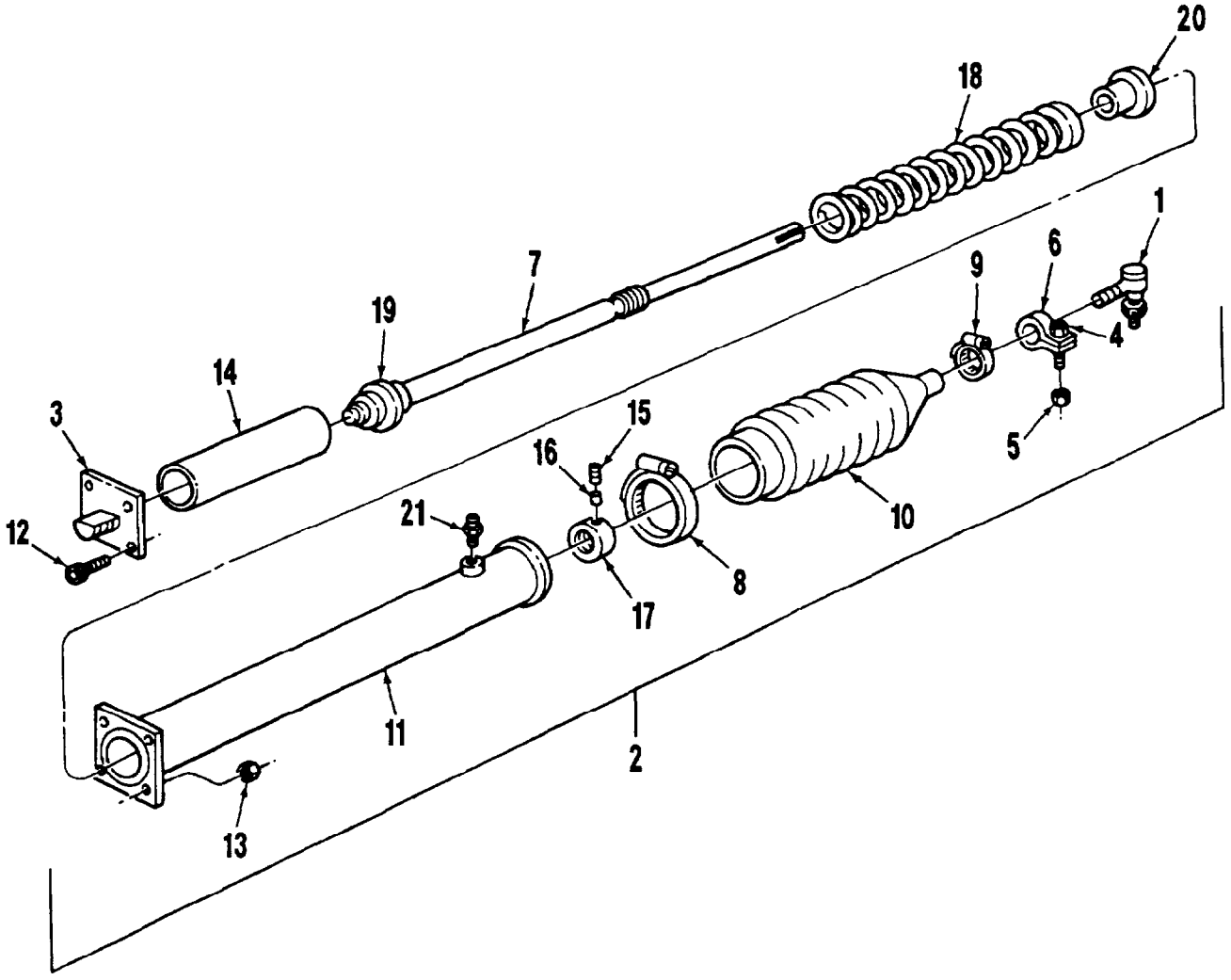

1. Socket Assembly
2. Fuse Link Assembly
3. Fuse Link Cover
4. Capscrew
5. Nut
6. Clamp
7. Fuse Link Rod
8. Hose Clamp
9. Hose Clamp
10. Boot
11. Fuse Link Housing
12. Allen Head Capscrew (4)
13. Locknut (4)
14. Fuse Link Spacer
15. Setscrew
16. Pellet
17. Adjusting Collar
18. Spring
19. Spring Cap
20. Cap
21. Lubrication Fitting

Figure 2-201. Fuse Link Assembly Disassembly/Assembly

(15) Remove spring (18) and spring cap (19) from fuse link rod (7).

(16) Insert fuse link rod (7) in fuse link housing (11) and cap (20) and install adjusting collar (17).

(17) Slide fuse link rod (7), cap (20), and adjusting collar (17) out of fuse link housing (11).

(18) Remove adjusting collar (17) and cap (20) from fuse link rod (7).

(19) Remove lubrication fitting (21) from fuse link housing (11).

b. Cleaning. Refer to Section III.

WARNING

To prevent personal injury when steam cleaning, personnel shall wear proper protective equipment conforming to OSHA Standards.

To prevent serious personal injury when abrasive blasting with high air pressure (120-150 psi), in open areas or confined areas, personnel shall wear full-body protective equipment conforming to OSHA Standards.

Dry cleaning solvents are flammable. Do not clean parts near an open flame or in a smoking area. Contact with skin may cause irritation or cracking. Use of rubber gloves conforming to FED SPEC ZZ-G-381, face shield conforming to L-F-36, and other protective equipment is required in accordance with OSHA Standards.

Adequate ventilation shall be provided while using solvents and cleaners. Prolonged breathing of vapors should be avoided. Do not use near heat or open flames. Avoid prolonged contact with skin. Use of rubber gloves conforming to FED SPEC ZZ-G-381, face shield conforming to FED SPEC L-F-36, and other protective equipment is required according to OSHA Standards.

(1) Steam clean fuse link assembly (2) to remove dirt and grease.

CAUTION

To prevent damage to internal surface of fuse link assembly from abrasive particles, plug all openings before abrasive blasting.

(2) Abrasive blast fuse link housing to remove paint, rust, and corrosion.

(3) Clean internal surface of fuse link housing and other internal parts with Dry Cleaning Solvent, FED SPEC P-D-680.

(4) Paint fuse link housing according to TM 4750-15/1.

c. Inspection

(1) Inspect fuse link rod for cracks, breaks, nicks, gouges, burs, wear, and damage.

(2) Inspect fuse link housing for cracks, breaks, nicks, gouges, burs, wear, and damage.

(3) Inspect spring for cracks, breaks, and collapsed condition.

(4) Inspect socket assembly for wear and damage.

(5) Inspect threaded areas for crossed, smashed, burred, and damaged threads.

(6) Inspect boot for weather checking, holes, tears, and damage.

d. Repair

(1) Repair threads according to TM 2350-45.

(2) Replace fuse link assembly (2) parts damaged beyond repair or failing inspection.

e. Assembly

(1) Insert fuse link rod (7), in sequence, through spring cap (19), spring (18), and cap (20).

(2) Coat inside of fuse link housing (11) with a thin film of grease conforming to MIL-G-23549.

(3) Insert fuse link rod (7) with spring (18), cap (20), and spring cap (19) in fuse link housing (11).

(4) Slide adjusting collar (17) on fuse link rod (7).

(5) While assistant pulls on fuse link rod (7) to compress spring (18), start threads of adjusting collar (17) on fuse link rod (7) then have assistant slowly release pressure on fuse link rod (7).

(6) Insert fuse link spacer (14) in fuse link housing (11).

(7) Apply silicone sealant conforming to MIL-A-46106 to mating surfaces of fuse link housing (11) and fuse link cover (3).

NOTE

Ensure flat side of threads on fuse link cover (3) faces same side as lubrication fitting (21) on fuse link housing (11).

(8) Install fuse link cover (3) on fuse link housing (11) using four Allen head capscrews (12) and new locknuts (13). Tighten locknuts (13) securely.

(9) Turn adjusting collar (17) against cap (20) until all end play is removed from fuse link rod (7).

(10) Insert pellet (16) and secure adjusting collar (17) with setscrew (15).

(11) Slide boot (10) over fuse link rod (7) and fuse link housing (11) and secure boot (10) with hose clamps (8 and 9).

(12) Install clamp (6) on fuse link rod (7).

(13) Fill slotted end of fuse link rod (7) with silicone sealant conforming to MIL-A-46106 before starting threads of socket assembly (1) in fuse link rod (7).

(14) Install capscrew (4) and nut (5) on clamp (6). Do not tighten nut (5) at this time.

(15) Install lubrication fitting (21) in fuse link housing (11). Tighten lubrication fitting (21) securely.

2-279. YAW CONTROL VALVE. Refer to TM 2320-34/13 for disassembly, cleaning, inspection, repair, and assembly of yaw control valve.

2-280. YAW FEEDBACK LINKAGE

a. Disassembly

(1) Secure pivot bracket (4, Figure 2-202) of bell crank arm (9) in vise with mounting plate down.

(2) Carefully pry hub cap (5) out of bell crank arm (9).

(3) Remove cotter pin (6), castellated nut (7), and washer (8) from pivot bracket (4). Discard cotter pin (6).

(4) Lift bell crank arm (9) off pivot bracket (4).

(5) Remove bearing cone (10) from bell crank arm (9).

(6) Push bearing cone (11) and seal (12) out of bottom of bell crank arm (9).

(7) If replacing bearing cones (10 and 11), carefully tap bearing cups (13 and 14) from bell crank arm (9) using a drift pin.

CAUTION

Note location of locking capscrews (15), nuts (16), and clamps (17) when disassembling. Improper assembly of clamps, capscrews and nuts could cause interference causing equipment damage or impaired steering.

NOTE

Socket assembly (2) has left hand thread, socket assembly (3) has right hand thread.

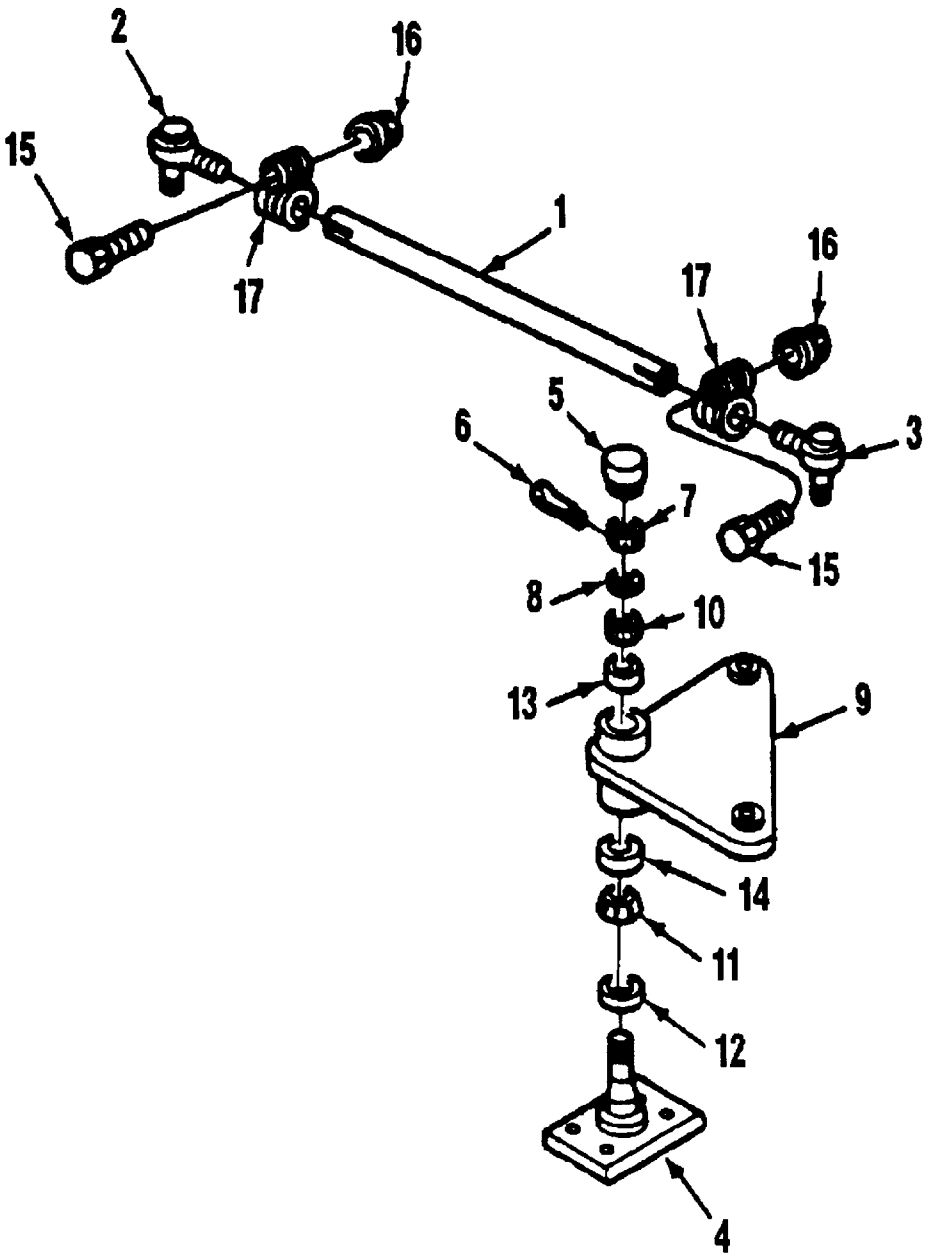

1. Drag Link
2. Socket Assembly
3. Socket Assembly
4. Pivot Bracket
5. Hub Cap
6. Cotter Pin
7. Castellated Nut
8. Washer
9. Bell Crank Arm
10. Bearing Cone
11. Bearing Cone
12. Seal
13. Bearing Cup
14. Bearing Cup
15. Locking Capscrew (2)
16. Nut (2)
17. Clamp (2)

Figure 2-202. Yaw Feedback Linkage Disassembly/Assembly

(8) Remove two nuts (16), locking capscrews (15), and clamps (17) from drag link (1).

(9) Unscrew and remove socket assemblies (2 and 3) from drag link (1).

b. Cleaning. Refer to Section III.

WARNING

To prevent personal injury when steam cleaning, personnel shall wear proper protective equipment conforming to OSHA Standards.

To prevent serious personal injury when abrasive blasting with high air pressure (120-150 psi), in open areas or confined areas, personnel shall wear full-body protective equipment conforming to OSHA Standards.

Dry cleaning solvents are flammable. Do not clean parts near an open flame or in a smoking area. Contact with skin may cause irritation or cracking. Use of rubber gloves conforming to FED SPEC ZZ-G-381, face shield conforming to L-F-36, and other protective equipment is required in accordance with OSHA Standards.

Adequate ventilation shall be provided while using solvents and cleaners. Prolonged breathing of vapors should be avoided. Do not use near heat or open flames. Avoid prolonged contact with skin. Use of rubber gloves conforming to FED SPEC ZZ-G-381, face shield conforming to FED SPEC L-F-36, and other protective equipment is required according to OSHA Standards.

When cleaning with compressed air, regulate to 25 psi maximum. Eyeshields must be worn to prevent injury to the eyes or complete loss of sight.

To prevent personal injury or possible damage to bearings, do not spin bearings with compressed air. Refer to TM 9-214 for care and maintenance of bearings.

CAUTION

To prevent damage to bearing cup surface in bell crank arm, plug openings before abrasive blasting.

(1) Steam clean yaw feedback linkage before disassembly to remove dirt and grease.

(2) Solvent clean bearing cones and cups and related parts with Dry Cleaning Solvent, FED SPEC P-D-680. Blow off excess solvent using compressed air 25 psi maximum.

(3) Abrasive blast drag link assemblies, bell crank arm, and pivot bracket to remove paint, rust, and corrosion.

(4) Paint yaw feedback linkage parts according to TM 4750-15/1.

c. Inspection

(1) Inspect yaw feedback linkage for free movement. There shall be no binding or dragging in linkage movement.

(2) Inspect bearing cones and cups for pits, corrosion, and damage.

(3) Inspect socket assemblies for play, cracks, and corrosion.

(4) Inspect bell crank arm and pivot bracket or cracks, chips, breaks, and corrosion.

(5) Inspect threaded areas for crossed, smashed, burred, and damaged threads.

d. Repair

(1) Repair threads according to TM 2350-45.

(2) Replace yaw feedback linkage parts damaged beyond repair or failing inspection.

e. Assembly

(1) Thread socket assemblies (2 and 3) in drag link (1) until distance between centers of socket assemblies (2 and 3) is 20 inches (50.8 cm).

NOTE

Final adjustment to yaw feedback linkage will be made after installation.

(2) Install clamps (17) on drag link (1) with two locking capscrews (15) and nuts (16). Hand tighten nuts (16).

(3) Pack new bearing cones (10 and 11) with grease conforming to MIL-G-23549.

(4) Install new bearing cups (13 and 14), if removed, in bell crank arm (9).

(5) Install bearing cone (11) in bottom of bell crank arm (9).

(6) Install new seal (12), ring side down, over bearing cone (11).

(7) Turn bell crank arm (9) over and install bearing cone (10).

(8) Slide bell crank arm (9) with bearing cones (10 and 11) on pivot bracket (4).

(9) Install washer (8) and castellated nut (7) on pivot bracket (4). Torque castellated nut (7) to 100 inch-pounds (11.3 N.m). Continue tightening castellated nut (7) to align slots for cotter pin (6). Do not back off castellated nut (7) to align slots.

(10) Tap bell crank arm (9) with soft faced hammer to seat bearing cones (10 and 11). Ensure bell crank arm (9) moves freely without binding.

(11) Install new cotter pin (6) to secure castellated nut (7).

(12) Tap hub cap (5) in bell crank arm (9) with a soft-faced hammer until seated.

2-281. BELL CRANK

a. Disassembly. No further disassembly required.

b. Cleaning. Refer to Section III.

WARNING

To prevent personal injury when steam cleaning, personnel shall wear proper protective equipment conforming to OSHA Standards.

To prevent serious personal injury when abrasive blasting with high air pressure (120-150 psi), in open areas or confined areas, personnel shall wear full-body protective equipment conforming to OSHA Standards.

Dry cleaning solvents are flammable. Do not clean parts near an open flame or in a smoking area. Contact with skin may cause irritation or cracking. Use of rubber gloves conforming to FED SPEC ZZ-G-381, face shield conforming to L-F-36, and other protective equipment is required in accordance with OSHA Standards.

Adequate ventilation shall be provided while using solvents and cleaners. Prolonged breathing of vapors should be avoided. Do not use near heat or open flames. Avoid prolonged contact with skin. Use of rubber gloves conforming to FED SPEC ZZ-G-381, face shield conforming to FED SPEC L-F-36, and other protective equipment is required according to OSHA Standards.

When cleaning with compressed air, regulate to 25 psi maximum. Eyeshields must be worn to prevent injury to the eyes or complete loss of sight.

To prevent personal injury or possible damage to bearings, do not spin bearings with compressed air. Refer to TM 9-214 for care and maintenance of bearings.

(1) Steam clean bell crank (9, Figure 2-142) to remove dirt and grease.

(2) Abrasive blast bell crank (9) to remove paint, rust, and corrosion.

(3) Clean bearing cups (13 and 14) and cones (8 and 12) using Dry Cleaning Solvent, FED SPEC P-D-680. Blow off excess solvent using compressed air 25 psi maximum.

(4) Paint bell crank (9) according to TM 4750-15/1.

c. Inspection

(1) Inspect bell crank (9) for cracks, breaks, wear, and damage.

(2) Inspect bell crank (9) for bends and deformation.

(3) Inspect cover (3) for cracks, breaks, holes, and damage.

(4) Inspect bearing cups (13 and 14) and cones (8 and 12) for pits, burs, rust, corrosion, wear, and signs of overheating.

(5) Inspect threaded areas for crossed, smashed, burred, and damaged threads.

d. Repair

(1) Repair damaged threads according to TM 2350-45.

(2) Replace bell crank (9) or related parts damaged beyond repair or failing inspection.

e. Assembly. No assembly required.

2-282. YAW STEERING CYLINDERS. Refer to TM 2320-34/13 for disassembly, cleaning, inspection, repair, and assembly of yaw steering cylinders (3, Figure 2-143).

2-283. ARTICULATION JOINT. Refer to TM 2320-34/13 for disassembly, cleaning, inspection, repair, and assembly of articulation joint.

2-284. SHOCK ABSORBERS AND BUSHINGS

a. Shock Absorbers

(1) Disassembly. No disassembly required.

(2) Cleaning. Refer to Section III. Steam clean shock absorbers (4, Figure 2-144) to remove dirt and grease.

(3) Inspection

(a) Inspect shock absorbers (4) for cracks, breaks, deformation, and damage.

(b) Inspect threaded areas for crossed, smashed, burred, and damaged threads.

(c) Inspect shock absorbers (4) for indications of leakage.

(d) Inspect shock absorbers (4) for proper operation.

(4) Repair

(a) Repair damaged threads according to TM 2350-45.

(b) Replace shock absorbers (4) damaged beyond repair or failing inspection.

(5) Assembly. No assembly required.

b. Bushings. Replace rubber bushings (7) 100 percent.

2-285. TORQUE RODS

a. Disassembly. No disassembly required.

b. Cleaning. Refer to Section III.

WARNING

To prevent personal injury when steam cleaning, personnel shall wear proper protective equipment conforming to OSHA Standards.

To prevent serious personal injury when abrasive blasting with high air pressure (120-150 psi), in open areas or confined areas, personnel shall wear full-body protective equipment conforming to OSHA Standards.

Adequate ventilation shall be provided while using solvents and cleaners. Prolonged breathing of vapors should be avoided. Do not use near heat or open flames. Avoid prolonged contact with skin. Use of rubber gloves conforming to FED SPEC ZZ-G-381, face shield conforming to FED SPEC L-F-36, and other protective equipment is required according to OSHA Standards.

CAUTION

To prevent damage to rubber support, do not direct abrasive particles at rubber support when blasting.

(1) Steam clean upper front and rear torque rods (5 and 20, Figure 2-145, Sheet 1 of 2) to remove dirt and grease.

(2) Abrasive blast upper front and rear torque rods (5 and 20) to remove paint, rust, and corrosion.

(3) Paint upper front and rear torque rods (5 and 20) according to TM 4750-15/1.

c. Inspection

(1) Inspect upper front and rear torque rods (5 and 20) for rubber support wear and damage.

(2) Inspect upper front and rear torque rods (5 and 20) for cracks, breaks, and deformation.

(3) Inspect threaded areas for crossed, smashed, burred, and damaged threads.

d. Repair

(1) Repair damaged threads according to TM 2350-45.

(2) Replace upper front and rear torque rods (5 and 20) damaged beyond repair or failing inspection.

e. Assembly. No assembly required.

2-286. AXLE ASSEMBLY NO. 1

a. Axle Assembly No. 1. Refer to TM 2320-34/13 for disassembly, cleaning, inspection, repair, and assembly of axle assembly no. 1.

b. Hub and Drum Assembly and Wheel Bearings

(1) Disassembly

(a) Remove oil seal (12, Figure 2-147) and seal spacer (13) from hub (6).

(b) Remove wheel bearing cone (14) from hub (6) and tag for later use.

(c) Wheel bearing cups (15 and 16) should not be removed unless hub (6) or cups (15 and 16) are being replaced.

(d) Remove bearing cups (15 and 16) by inserting a driver in the grooves in hub (6).

(e) Position hub and drum assembly (1) with wheel lug studs (17) facing up.

(f) Separate hub (6) from brake drum (19) by installing a lug nut (18) on each wheel lug stud (17) until lug nut (18) is flush with top of wheel lug stud (17).

(g) Drive ten wheel lug studs (17) downward until loose.

(h) Remove lug nuts (18) and wheel lug studs (17) from hub and drum assembly (1).

(i) Remove brake drum (19) from hub (6).

(j) Remove studs (20) from hub (6).

(2) Cleaning. Refer to Section III.

WARNING

To prevent personal injury when steam cleaning, personnel shall wear proper protective equipment conforming to OSHA Standards.

To prevent serious personal injury when abrasive blasting with high air pressure (120-150 psi), in open areas or confined areas, personnel shall wear full-body protective equipment conforming to OSHA Standards.

Dry cleaning solvents are flammable. Do not clean parts near an open flame or in a smoking area. Contact with skin may cause irritation or cracking. Use of rubber gloves conforming to FED SPEC ZZ-G-381, face shield conforming to L-F-36, and other protective equipment is required in accordance with OSHA Standards.

Adequate ventilation shall be provided while using solvents and cleaners. Prolonged breathing of vapors should be avoided. Do not use near heat or open flames. Avoid prolonged contact with skin. Use of rubber gloves conforming to FED SPEC ZZ-G-381, face shield conforming to FED SPEC L-F-36, and other protective equipment is required according to OSHA Standards.

WARNING

When cleaning with compressed air, regulate to 25 psi maximum. Eyeshields must be worn to prevent injury to the eyes or complete loss of sight.

To prevent personal injury or possible damage to bearings, do not spin bearings with compressed air. Refer to TM 9-214 for care and maintenance of bearings.

(a) Steam clean hub and drum assembly (1, Figure 2-147) to remove dirt and grease.

(b) Abrasive blast hub and drum assembly (1) to remove paint, rust, and corrosion.

(c) Clean bearing cups (15 and 16) and cones (11 and 14) using Dry Cleaning Solvent, FED SPEC P-D-680. Blow off excess solvent using compressed air 25 psi maximum.

(d) Paint hub and drum assembly (1) according to TM 4750-15/1.

(3) Inspection

(a) Inspect bearing cones (11 and 14) for roughness, pits, binding, signs of overheating, and damage by rotating bearing cones (11 and 14) slowly.

(b) Inspect hub (6) for cracks, breaks, deformation, and damage.

(c) Inspect bearing cups (15 and 16) for roughness, pits, signs of overheating, and damage.

(d) Inspect brake drum (19) for cracks, breaks, grooves, wear, deformation, signs of overheating, and damage.

(e) Inspect threaded areas for crossed, smashed, burred, and damaged threads.

(f) Inspect center of hub cap (4) for looseness and damage.

(4) Repair

NOTE

Measure inside diameter of brake drum (No. 1, Figure 2-203) at three equally spaced points. If measurement exceeds 17.085 inches (43.39 cm), replace brake drum (No. 1).

If measurement does not exceed 17.085 inches (43.39 cm), turn brake drum (No. 1).

(a) Repair brake drum by turning it as needed to obtain a smooth, clean finish free of pits, grooves, or cracks. Do not exceed 17.085 inches (43.39 cm) maximum diameter after turning.

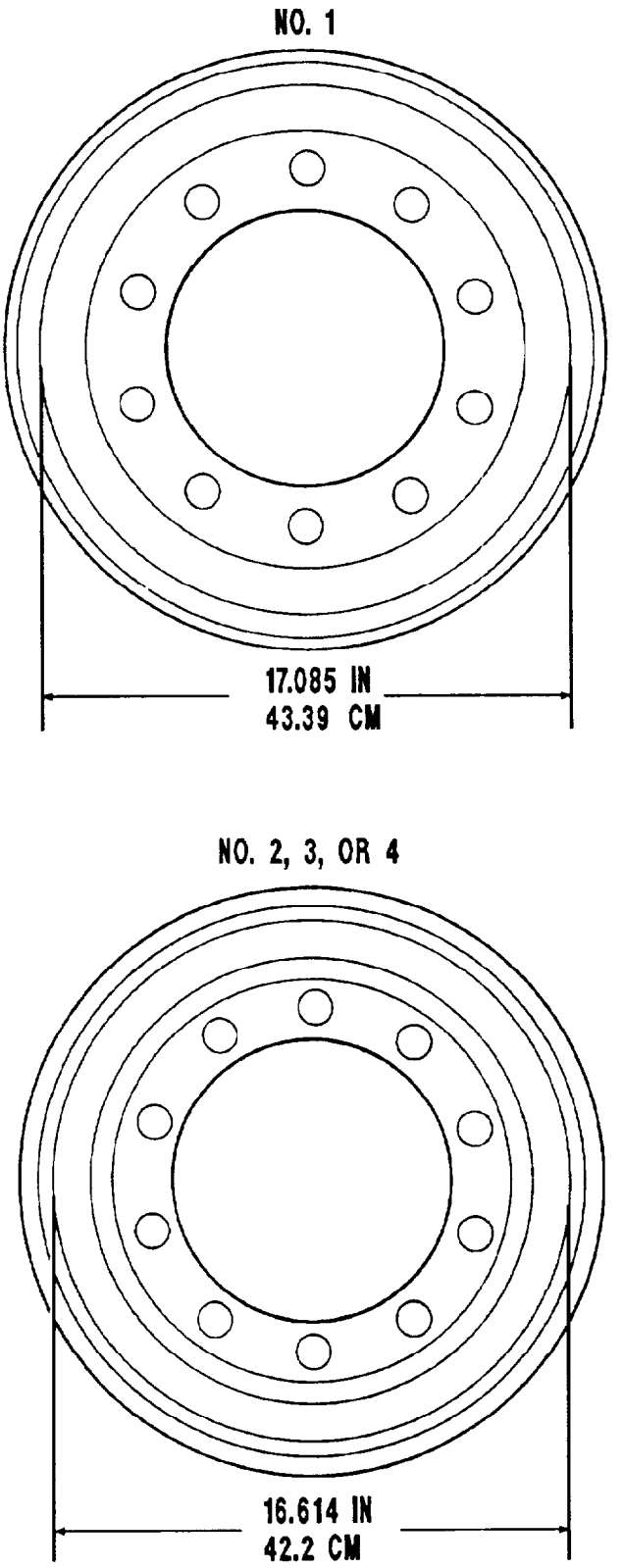

Figure 2-203. Brake Drums (Axles No. 1 and 2)

(b) Repair damaged threads according to TM 2350-45.

(c) Replace oil seals (12, Figure 2-147) 100 percent.

(d) Replace hub and drum assembly (1) parts damaged beyond repair or failing inspection.

(5) Assembly

(a) Install ten wheel lug studs (17) in holes in hub (6) and drive wheel lug studs (17) down until they bottom out in hub (6).

(b) Install bearing cups (15 and 16), if removed, in hub (6) and drive them down in hub (6) until fully seated.

(c) Pack inner wall of hub (6) with grease conforming to MIL-G-23549.

(d) Pack wheel bearing cones (14 and 11) with grease conforming to MIL-G-23549.

(e) Install wheel bearing cone (14) in hub (6).

(f) Install seal spacer (13) in hub (6) with inner chamfer facing out.

(g) Install oil seal (12) in hub (6) with lip of oil seal (12) facing in and flush with face of hub (6).

(h) Coat lip of oil seal (12) with grease conforming to MIL-G-23549. Refer to Section V in this manual for installation of hub (6) and brake drum (19).

c. Brake Shoes and Linings

(1) Disassembly

WARNING

Brake linings contain asbestos. Do not use compressed air to clean brake shoes.

To prevent damage to lungs, respirator shall be worn when working with brake linings or other materials containing asbestos.

Dispose of brake linings according to local, state, and federal regulations governing the disposal of asbestos or material containing asbestos.

CAUTION

If brake shoes and linings are being replaced on one end of axle, replace all brake shoes and linings on that axle. Mixing old and new brake shoes and linings will cause uneven braking.

(a) Place brake shoe and lining assembly (1, Figure 2-204) in a vise.

(b) Drill out all rivets (2) securing linings (3) to brake shoe (6).

(c) Remove linings (3) from brake shoe (6). Discard linings (3).

(2) Cleaning. Refer to Section III.

WARNING

To prevent personal injury when steam cleaning, personnel shall wear proper protective equipment conforming to OSHA Standards.

To prevent serious personal injury when abrasive blasting with high air pressure (120-150 psi), in open areas or confined areas, personnel shall wear full-body protective equipment conforming to OSHA Standards.

Adequate ventilation shall be provided while using solvents and cleaners. Prolonged breathing of vapors should be avoided. Do not use near heat or open flames. Avoid prolonged contact with skin. Use of rubber gloves conforming to FED SPEC ZZ-G-381, face shield conforming to FED SPEC L-F-36, and other protective equipment is required according to OSHA Standards.

(a) Steam clean brake shoe to remove dirt and grease.

(b) Abrasive blast brake shoe to remove paint, rust, and corrosion.

(c) Paint brake shoe according to TM 4750-15/1.

(3) Inspection

(a) Inspect contact surfaces of brake shoe for wear spots or burs.

(b) Inspect rivet holes in brake shoe for out-of-round.

(c) Inspect brake shoe for bending or warping.

(d) Inspect anchor end and adjuster end of brake shoe for wear and cracks.

(4) Repair

CAUTION

Do not attempt to use rivets more than one size over original. If this is not possible, discard brake shoe.

(a) Drill any out-of-round hole to the next larger rivet size.

(b) Remove burs from brake shoe contact surface using a file or sandpaper.

(c) Replace brake shoe damaged beyond repair or failing inspection.

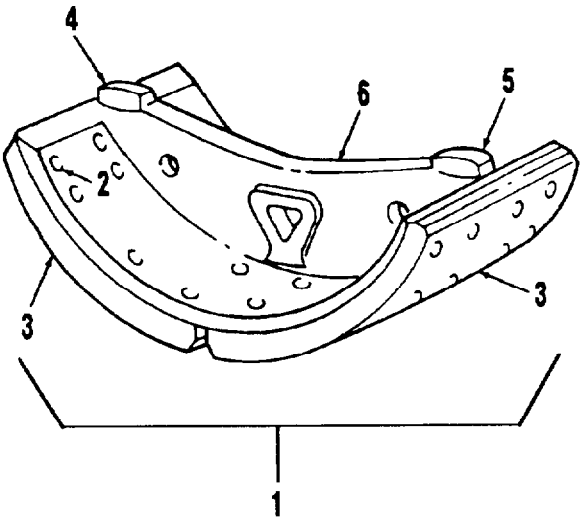

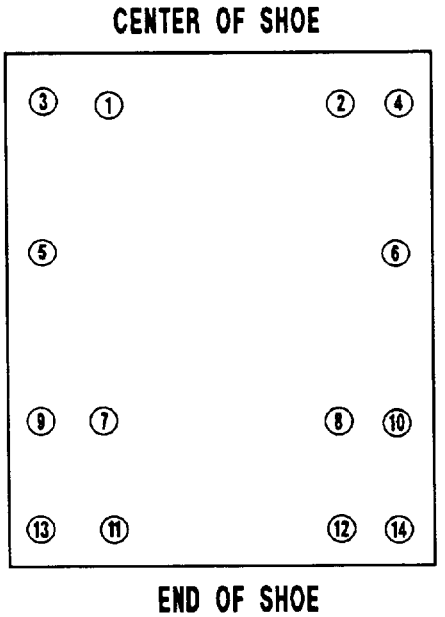

1. Brake Shoe and Lining Assembly
2. Rivets
3. Linings
4. Anchor End
5. Adjuster End
6. Brake Shoe

Figure 2-204. Brake Shoes and Linings (Axle No. 1) Disassembly/Assembly

(5) Assembly

(a) Clamp new linings (3, Figure 2-204) to brake shoe (6) so rivet holes line up.

(b) Install rivets (2) in the order shown.

(c) Secure rivets (2) in place.

(d) Check linings (3) to ensure a tight fit against brake shoe (6).

d. Brake Chamber

(1) Disassembly

(a) Matchmark pressure housing (1, Figure 2-205) and clamp ring (2) to ensure proper assembly.

(b) Remove two nuts (3) and capscrews (4) from clamp ring (2).

(c) Spread and remove clamp ring (2).

(d) Remove pressure housing (1) and diaphragm (5) from nonpressure housing (7).

(e) Remove diaphragm plate/push rod (6) from nonpressure housing (7).

(f) Remove wedge guide (8) from diaphragm plate/push rod (6).

(g) Remove boot (9) from nonpressure housing (7).

(h) Remove collet nut (10) from nonpressure housing (7).

(2) Cleaning. Refer to Section III.

WARNING

To prevent personal injury when steam cleaning, personnel shall wear proper protective equipment conforming to OSHA Standards.

To prevent serious personal injury when abrasive blasting with high air pressure (120-150 psi), in open areas or confined areas, personnel shall wear full-body protective equipment conforming to OSHA Standards.

Dry cleaning solvents are flammable. Do not clean parts near an open flame or in a smoking area. Contact with skin may cause irritation or cracking. Use of rubber gloves conforming to FED SPEC ZZ-G-381, face shield conforming to L-F-36, and other protective equipment is required in accordance with OSHA Standards.

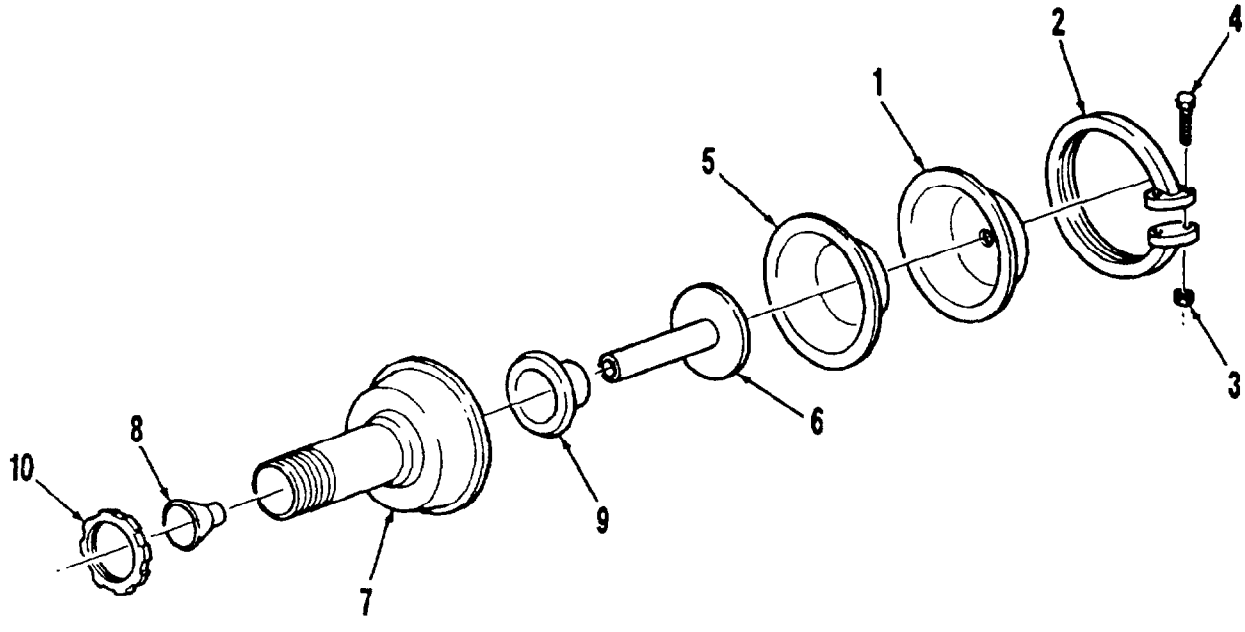

1. Pressure Housing
2. Clamp Ring
3. Nut (2)
4. Capscrew (2)
5. Diaphragm
6. Diaphragm Plate/Push Rod
7. Nonpressure Housing
8. Wedge Guide
9. Boot
10. Collet Nut

Figure 2-205. Brake Chamber (Axle No. 1) Disassembly/Assembly

WARNING

Adequate ventilation shall be provided while using solvents and cleaners. Prolonged breathing of vapors should be avoided. Do not use near heat or open flames. Avoid prolonged contact with skin. Use of rubber gloves conforming to FED SPEC ZZ-G-381, face shield conforming to FED SPEC L-F-36, and other protective equipment is required according to OSHA Standards.

(a) Steam clean brake chamber to remove dirt and grease.

(b) Abrasive blast brake chamber to remove paint, rust, and corrosion.

(c) Clean boot using Dry Cleaning Solvent, FED SPEC P-D-680 to remove adhesive used to secure boot.

(d) Paint brake chamber according to TM 4750-15/1.

(3) Inspection

(a) Inspect pressure housing and nonpressure housing for cracks, breaks, holes, rust-through conditions, and damage.

(b) Inspect clamp ring for cracks, breaks, bends, deformation, and damage.

(c) Inspect collet nut for cracks, breaks, deformation, and damage.

(d) Inspect wedge guide for cracks, breaks, and wear.

(e) Inspect threaded areas for crossed, smashed, burred, and damaged threads.

(4) Repair

(a) Replace diaphragm 100 percent.

(b) Replace boot 100 percent.

(c) Repair threads according to TM 2350-45.

(d) Replace brake chamber parts damaged beyond repair or failing inspection.

(5) Assembly

(a) Apply adhesive to new boot (9). Use adhesive conforming to MIL-A-5092.

(b) Install boot (9) in outer sealing area of nonpressure housing (7).

NOTE

Allow time for cement to set up before continuing assembly.

(c) Install diaphragm plate/push rod (6) through boot (9).

(d) Install wedge guide (8) on diaphragm plate/push rod (6).

(e) Install new diaphragm (5) and pressure housing (1) on nonpressure housing (7).

(f) Install clamp ring (2) on pressure housing (1) and nonpressure housing (7).

(g) Align matchmarks made during disassembly and install two capscrews (4) and nuts (3) in clamp ring (2).

(h) Install collet nut (10) on nonpressure housing (7).

e. Plunger Assemblies (Actuating and Anchor)

(1) Disassembly. No further disassembly required.

(2) Cleaning. Refer to Section III.

WARNING

Dry cleaning solvents are flammable. Do not clean parts near an open flame or in a smoking area. Contact with skin may cause irritation or cracking. Use of rubber gloves conforming to FED SPEC ZZ-G-381, face shield conforming to L-F-36, and other protective equipment is required in accordance with OSHA Standards.

Adequate ventilation shall be provided while using solvents and cleaners. Prolonged breathing of vapors should be avoided. Do not use near heat or open flames. Avoid prolonged contact with skin. Use of rubber gloves conforming to FED SPEC ZZ-G-381, face shield conforming to FED SPEC L-F-36, and other protective equipment is required according to OSHA Standards.

When cleaning with compressed air, regulate to 25 psi maximum. Eyeshields must be worn to prevent injury to the eyes or complete loss of sight.

(a) Remove loose dirt from plunger assembly parts using a small wire brush.

(b) Clean plunger assembly parts using Dry Cleaning Solvent, FED SPEC P-D-680 to remove dirt and grease. Blow off excess solvent using compressed air 25 psi maximum.

(c) Allow wedge brake parts to dry thoroughly.

(3) Inspection

(a) Inspect adjusting pawls (6, Figure 2-150) and adjusting sleeves (12) for grooves.

(b) Inspect plunger housings (2 and 19) for cracks, breaks, deformation, and damage.

(c) Inspect inside of plunger housings (2 and 19) for wear, pitting, or scoring.

(d) Inspect plungers for cracks, nicks, gouges, wear, and damage.

(e) Inspect threaded areas for crossed, smashed, burred, and damaged threads.

(4) Repair

NOTE

If inspection reveals a problem in actuating plunger housing (2), brake spider (20) may be turned 180 degrees on axle. Anchor plunger housing (19) may then be used as the actuating plunger housing.

(a) Replace plunger seals (11) 100 percent.

(b) Repair threads according to TM 2350-45.

(c) Replace plunger assembly parts damaged beyond repair or failing inspection.

(5) Assembly. No assembly required.

f. Brake Spider and Skein

(1) Brake Spider

(a) Disassembly. No further disassembly required.

(b) Cleaning. Refer to Section III.

WARNING

To prevent personal injury when steam cleaning, personnel shall wear proper protective equipment conforming to OSHA Standards.

To prevent serious personal injury when abrasive blasting with high air pressure (120-150 psi), in open areas or confined areas, personnel shall wear full-body protective equipment conforming to OSHA Standards.

Adequate ventilation shall be provided while using solvents and cleaners. Prolonged breathing of vapors should be avoided. Do not use near heat or open flames. Avoid prolonged contact with skin. Use of rubber gloves conforming to FED SPEC ZZ-G-381, face shield conforming to FED SPEC L-F-36, and other protective equipment is required according to OSHA Standards.

1 Steam clean brake spider (7, Figure 2-151) to remove dirt and grease.

2 Abrasive blast brake spider (7) to remove paint, rust, and corrosion.

3 Paint brake spider (7) according to TM 4750-15/1.

(c) Inspection

1 Inspect brake spider (7) for cracks, breaks, deformation, and damage.

2 Inspect machined surfaces for nicks, gouges, pits, deformation, and damage.

3 Inspect threaded areas for crossed, smashed, burred, and damaged threads.

(d) Repair

1 Repair threads according to TM 2350-45.

2 Replace brake spider (7) damaged beyond repair or failing inspection.

(e) Assembly. No assembly required.

(2) Skein

(a) Disassembly. No disassembly required.

(b) Cleaning. Refer to Section III.

WARNING

To prevent personal injury when steam cleaning, personnel shall wear proper protective equipment conforming to OSHA Standards.

Adequate ventilation shall be provided while using solvents and cleaners. Prolonged breathing of vapors should be avoided. Do not use near heat or open flames. Avoid prolonged contact with skin. Use of rubber gloves conforming to FED SPEC ZZ-G-381, face shield conforming to FED SPEC L-F-36, and other protective equipment is required according to OSHA Standards.

1 Steam clean skein (9) to remove dirt and grease.

2 Remove surface rust or corrosion using a wire brush.

3 Coat skein (9) with light lubricant to prevent oxidation from occurring if skein (9) will not be used immediately after cleaning. Use Greaseless Lubricant, NSN 6850-00-A14-5882 or equivalent.

(c) Inspection

1 Inspect skein (9) for cracks, breaks, deformation, and damage.

2 Inspect skein (9) sealing surface for nicks, gouges, pits, deformation, and damage.

3 Inspect threaded areas for crossed, smashed, burred, and damaged threads.

(d) Repair

1 Repair damaged threads according to TM 2350-45.

2 Replace skein (9) damaged beyond repair or failing inspection.

(e) Assembly. No assembly required.

g. Axle Shaft Assembly

(1) Disassembly. No disassembly required.

(2) Cleaning. Refer to Section III.

WARNING

To prevent personal injury when steam cleaning, personnel shall wear proper protective equipment conforming to OSHA Standards.

Adequate ventilation shall be provided while using solvents and cleaners. Prolonged breathing of vapors should be avoided. Do not use near heat or open flames. Avoid prolonged contact with skin. Use of rubber gloves conforming to FED SPEC ZZ-G-381, face shield conforming to FED SPEC L-F-36, and other protective equipment is required according to OSHA Standards.

(a) Steam clean axle shaft assembly (1, Figure 2-152) to remove dirt and grease.

(b) Remove surface rust or corrosion using a wire brush.

(c) Coat axle shaft assembly (1) with light lubricant to prevent oxidation from occurring if axle shaft assembly (1) will not be used immediately after cleaning. Use Greaseless Lubricant, NSN 6850-00-A14-5882 or equivalent.

(3) Inspection

(a) Inspect axle shaft assembly (1) for cracks, breaks, deformation, and damage.

(b) Inspect splines (4) for rolling, peening, nicks, burs, gouges, wear, and damage.

(c) Inspect cage ring (5) for cracks, breaks, deformation, and damage.

(d) Inspect axle shaft assembly (1) for freedom of movement in cage ring (5). There shall be no binding in the movement.

(e) Inspect oil seal surface (6) for pits, grooves, wear, and damage.

(4) Repair

(a) Remove burs from axle assembly (1) using a file.

(b) Replace axle shaft assembly (1) damaged beyond repair or failing inspection.

(5) Assembly. No assembly required.

h. Tie Rod and Axle Ball Socket Wiper Seal

(1) Tie Rod

(a) Disassembly

1 Remove locknut (23, Figure 2-153) and capscrew (24). Discard locknut (23).

CAUTION

Left tie rod end has left-hand threads and right tie rod end has right-hand threads. To prevent damage to tie rod and tie rod ends, do not switch tie rod ends in tie rod.

2 Remove two tie rod ends (3) and record number of turns needed for removal.

(b) Cleaning. Refer to Section III.

WARNING

To prevent personal injury when steam cleaning, personnel shall wear proper protective equipment conforming to OSHA Standards.

To prevent serious personal injury when abrasive blasting with high air pressure (120-150 psi), in open areas or confined areas, personnel shall wear full-body protective equipment conforming to OSHA Standards.

Adequate ventilation shall be provided while using solvents and cleaners. Prolonged breathing of vapors should be avoided. Do not use near heat or open flames. Avoid prolonged contact with skin. Use of rubber gloves conforming to FED SPEC ZZ-G-381, face shield conforming to FED SPEC L-F-36, and other protective equipment is required according to OSHA Standards.

1 Steam clean tie rod (5) to remove dirt and grease.

2 Abrasive blast tie rod (5) to remove paint, rust, and corrosion.

3 Paint tie rod (5) according to TM 4750-15/1.

(c) Inspection

1 Inspect tie rod (5) and tie rod ends (3) for cracks, breaks, and damage.

2 Inspect tie rod ends (3) for wear and play.

3 Inspect tie rod (5) for bends and deformation.

4 Inspect threaded areas for crossed, smashed, burred, and damaged threads.

(d) Repair

1 Repair threads according to TM 2320-45.

2 Replace tie rod (5) and tie rod ends (3) damaged beyond repair or failing inspection.

(e) Assembly

CAUTION

To prevent damage to equipment, accelerated wear on front tires, and to ensure tie rod end (3) is secured properly in tie rod (5), threads of tie rod end (3) must extend beyond slot in tie rod (5).

1 Coat threads of tie rod ends (3) with anti-seize compound and thread in tie rod (5).

2 Turn tie rod ends (3) in tie rod (5) the same number of turns as recorded during disassembly.

3 Install capscrew (24) and new locknut (23) in tie rod (5). Do not tighten locknuts (23) at this time. Repeat for other end of tie rod (5).

(2) Axle Ball Socket Wiper Seal. Replace axle ball socket wiper seal (21) 100 percent.

i. Axle Ball Socket and Trunnion Bearings

(1) Axle Ball Socket. Refer to TM 2320-34/13 for disassembly, cleaning, inspection, repair, and assembly of axle ball socket assembly (10).

(2) Trunnion Bearings. Refer to TM 2320-34/13 for disassembly, cleaning, inspection, repair and assembly of trunnion bearings.

2-287. AXLE ASSEMBLY NO. 2

a. Axle Assembly No. 2. Refer to TM 2320-34/13 for disassembly, cleaning, inspection, repair, and assembly of axle assembly no. 2 (19, Figure 2-154, Sheet 2 of 2).

b. Brake Chamber

(1) Disassembly

WARNING

To prevent personal injury or death, never attempt to repair brake chamber before removing it from MK48.

WARNING

Do not disturb clamp (1, Figure 2-206) on parking brake side of brake chamber. Clamp (1) secures spring under high tension. Severe injury or death may result if attempts are made to loosen or remove clamp (1).

To prevent personal injury, never work directly behind brake chamber.

To prevent personal injury, ensure brake chamber was properly caged during removal.

NOTE

Chamber (4) is under slight spring pressure.

Chamber (4) will separate from flange case (5).

Brake chambers have changed to a new style that has a crimped ring around the parking brake section of the chamber rather than a bolt together ring. When repairing a non-A1 vehicle, use the new style chamber to replace the old style chamber. Refer to TM 9-2320-297-24P for correct part identification.

(a) Matchmark chamber clamps (2 and 3), chamber (4), and flange case (5) to ensure proper assembly.

(b) Remove two nuts (6), capscrews (7), and chamber clamp halves (2 and 3).

(c) Remove diaphragm (8) from flange case (5). Discard diaphragm (8).

(d) Remove clevis (9), jamnut (10), piston/rod (11), and spring (12).

(2) Cleaning. Refer to Section III.

WARNING

To prevent personal injury when steam cleaning, personnel shall wear proper protective equipment conforming to OSHA Standards.

To prevent serious personal injury when abrasive blasting with high air pressure (120-150 psi), in open areas or confined areas, personnel shall wear full-body protective equipment conforming to OSHA Standards.

Adequate ventilation shall be provided while using solvents and cleaners. Prolonged breathing of vapors should be avoided. Do not use near heat or open flames. Avoid prolonged contact with skin. Use rubber gloves conforming to FED SPEC ZZ-G-381, face shield conforming to FED SPEC L-F-36, and other protective equipment is required according to OSHA Standards.

(a) Steam clean brake chamber to remove dirt, grease, and oil.

(b) Abrasive blast brake chamber to remove paint, rust, and corrosion.

(c) Paint brake chamber according to TM 4750-15/1.

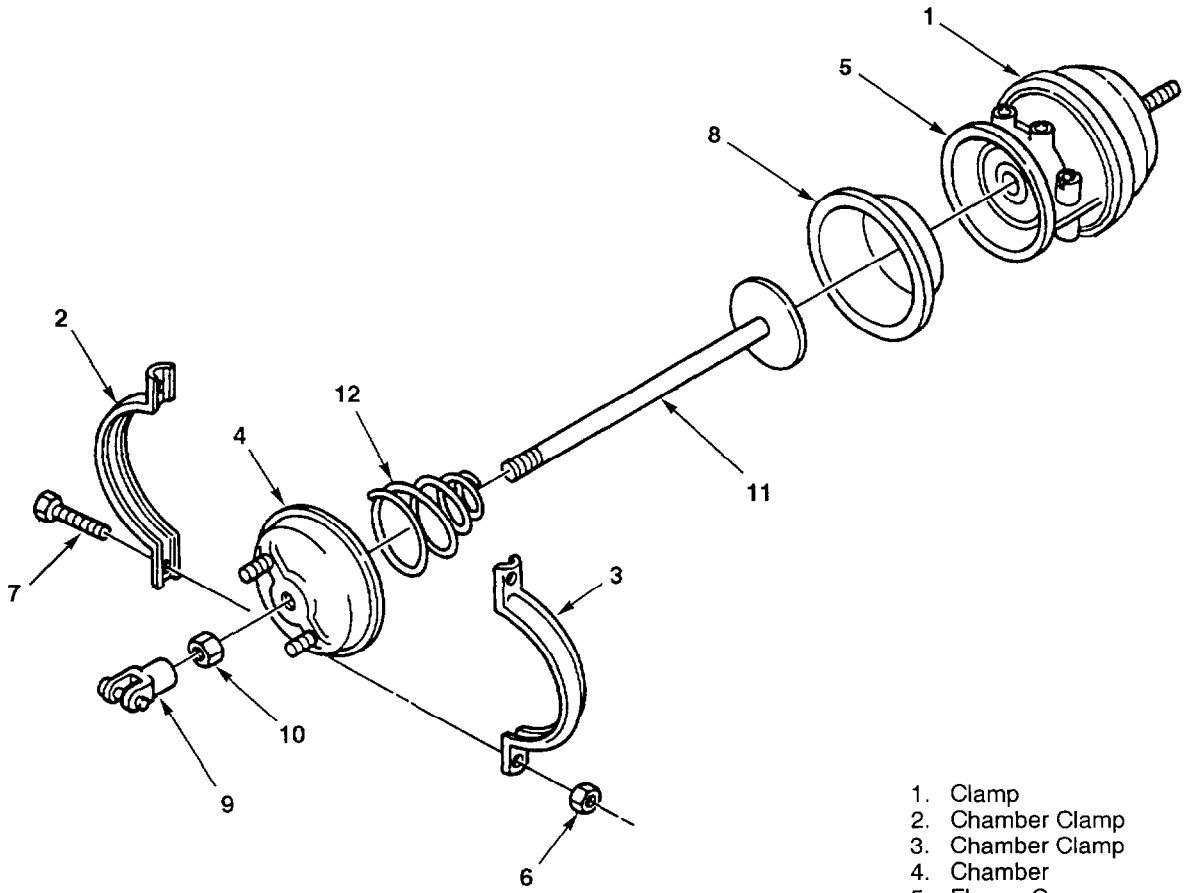

1. Clamp
2. Chamber Clamp
3. Chamber Clamp
4. Chamber
5. Flange Case
6. Nut (2)
7. Capscrew (2)
8. Diaphragm
9. Clevis
10. Jam Nut
11. Piston/Rod
12. Spring

Figure 2-206. Brake Chamber (Axle No. 2) Disassembly/Assembly

(3) Inspection

(a) Inspect flange case and chamber for cracks, pits, and damage.

(b) Inspect clamps for serviceability.

(c) Inspect piston/rod for thread damage, cracks, and bends.

(4) Repair. Replace brake chamber parts damaged beyond repair or failing inspection.

(5) Assembly

(a) Place piston/rod (11, Figure 2-206) flat on bench with rod end up.

(b) Install spring (12) and chamber (4) on piston/rod (11).

(c) Compress spring (12) and install jamnut (10) on piston/rod (11).

(d) Install new diaphragm (8) in flange case (5).

NOTE

Ensure flanges on chamber (4), diaphragm (8), and flange case (5) are properly aligned.

(e) Install two chamber clamps (2 and 3) with two capscrews (7) and nuts (6).

(f) Align matchmarks made during disassembly and torque nuts (6) to 25 ft-lb (34 N.m).

(g) Install clevis (9) and secure it in place with jamnut (10).

c. Axle Shaft

(1) Disassembly. No disassembly required.

(2) Cleaning. Refer to Section III.

WARNING

To prevent personal injury when steam cleaning, personnel shall wear proper protective equipment conforming to OSHA Standards.

Adequate ventilation shall be provided while using solvents and cleaners. Prolonged breathing of vapors should be avoided. Do not use near heat or open flames. Avoid prolonged contact with skin. Use of rubber gloves conforming to FED SPEC ZZ-G-381, face shield conforming to FED SPEC L-F-36, and other protective equipment is required according to OSHA Standards.

WARNING

To prevent serious personal injury when abrasive blasting with high air pressure (120-150 psi), in open areas or confined areas, personnel shall wear full-body protective equipment conforming to OSHA Standards.

(a) Steam clean axle shaft (3, Figure 2-156) to remove dirt, grease, and oil.

(b) Abrasive blast axle shaft (3) to remove paint, rust, and corrosion.

NOTE

After blasting axle shaft (3), apply a thin coat of Greaseless Lubricant, NSN 6850-00-A14-5852 or equivalent to prevent rust and corrosion until axle shaft is installed.

(c) Paint axle shaft flange (exterior only) according to TM 4750-15/1.

(3) Inspection

(a) Inspect splines for wear, pitting, rolling, and peening.

(b) Inspect axle shaft (3) for warpage and stress cracks.

(c) Inspect axle shaft (3) flange gasket surface for deep grooves, cracks, and burs.

(4) Repair. Replace axle shaft (3) damaged beyond repair or failing inspection.

(5) Assembly. No assembly required.

d. Hub and Drum Assembly and Wheel Bearings

(1) Hub

(a) Disassembly. No disassembly required.

(b) Cleaning. Refer to Section III.

WARNING

To prevent personal injury when steam cleaning, personnel shall wear proper protective equipment conforming to OSHA Standards.

To prevent serious personal injury when abrasive blasting with high air pressure (120-150 psi), in open areas or confined areas, personnel shall wear full-body protective equipment conforming to OSHA Standards.

WARNING

Adequate ventilation shall be provided while using solvents and cleaners. Prolonged breathing of vapors should be avoided. Do not use near heat or open flames. Avoid prolonged contact with skin. Use of rubber gloves conforming to FED SPEC ZZ-G-381, face shield conforming to FED SPEC L-F-36, and other protective equipment is required according to OSHA Standards.

1 Steam clean hub (8, Figure 2-157) to remove dirt, grease, and oil.

2 Abrasive blast hub (8) to remove paint, rust, and corrosion.

3 Paint hub (8) according to TM 4750-15/1.

(c) Inspection

1 Inspect hub (8) for cracks, breaks, deformation, and damage.

2 Inspect hub (8) for bent, broken, and damaged studs.

3 Inspect threaded areas for crossed, smashed, burred, and damaged threads.

(d) Repair. Replace hub (8) damaged beyond repair or failing inspection.

(e) Assembly. No assembly required.

(2) Drum

(a) Disassembly. No disassembly required.

(b) Cleaning. Refer to Section III.

WARNING

To prevent personal injury when steam cleaning, personnel shall wear proper protective equipment conforming to OSHA Standards.

To prevent serious personal injury when abrasive blasting with high air pressure (120-150 psi), in open areas or confined areas, personnel shall wear full-body protective equipment conforming to OSHA Standards.

Adequate ventilation shall be provided while using solvents and cleaners. Prolonged breathing of vapors should be avoided. Do not use near heat or open flames. Avoid prolonged contact with skin. Use of rubber gloves conforming to FED SPEC ZZ-G-381, face shield conforming to FED SPEC L-F-36, and other protective equipment is required according to OSHA Standards.

1 Steam clean drum (11) to remove dirt, grease, and oil.

2 Abrasive blast drum (11) to remove paint, rust, and corrosion.

3 Paint drum (11) according to TM 4750-15/1.

(c) Inspection

1 Inspect drum (11) for pits, grooves, cracks, and wear.

2 Inspect brake shoe contact area of drum (11) for heat cracks, deep grooves, and pits.

(d) Repair

1 Measure inside of drum (no. 2, 3, or 4, Figure 2-203) in at least three equally spaced points and replace drum (no. 2, 3, or 4) if measurement at any point exceeds 16.614 in (42.2 cm).

2 If drum (no. 2, 3, or 4) can be turned, turn as needed to obtain a smooth, clean finish, free of pits, grooves, and cracks. Diameter of drum (no. 2, 3, or 4) shall not exceed 16.614 in (42.2 cm) at any point measured after turning.

(e) Assembly. No assembly required.

(3) Wheel Bearings

(a) Disassembly. No disassembly required.

(b) Cleaning. Refer to Section III.

WARNING

To prevent personal injury and possible damage to bearings, do not spin bearings with compressed air. Refer to TM 9-214 for care and maintenance of bearings.

Dry cleaning solvents are flammable. Do not clean parts near an open flame or in a smoking area. Contact with skin may cause irritation or cracking. Use of rubber gloves conforming to FED SPEC ZZ-G-381, face shield conforming to L-F-36, and other protective equipment is required in accordance with OSHA Standards.

Adequate ventilation shall be provided while using solvents and cleaners. Prolonged breathing of vapors should be avoided. Do not use near heat or open flames. Avoid prolonged contact with skin. Use of rubber gloves conforming to FED SPEC ZZ-G-381, face shield conforming to FED SPEC L-F-36, and other protective equipment is required according to OSHA Standards.

NOTE

If bearings are extremely dirty or are filled with hardened grease, allow to soak to loosen the caked material.

NOTE

Bearings which will not be reassembled immediately should be wrapped in Barrier Material, Grease, NSN 8135-00-543-6574 or otherwise protected from dust and moisture pending reuse.

1 Clean wheel bearings with Dry Cleaning Solvent, FED SPEC P-D-680.

2 Flush solvent back and forth between the races to remove loosened dirt, grit, and abrasive particles. Use a soft-bristled nonmetallic brush to aid in cleaning.

3 Drain excess solvent from bearings and allow to dry thoroughly.

4 Lubricate bearings immediately after cleaning with Grease, Aircraft, General Purpose, Wide Temperature Range, MIL-G-81322, NSN 9150-00-935-5851.

(c) Inspection

1 Inspect wheel bearing cones (4 and 7, Figure 2-157) for roughness, pits, and binding by rotating bearing cones slowly.

2 Inspect bearing cups (12 and 13) for signs of overheating, pits, wear, corrosion, and damage.

(d) Repair. Replace wheel bearing cones (4 and 7) and cups (12 and 13) damaged beyond repair or failing inspection.

(e) Assembly. No assembly required.

e. Brake Shoes and Linings

(1) Disassembly

WARNING

To prevent damage to lungs, respirator shall be worn when working with brake linings or other materials containing asbestos.

Dispose of brake linings according to local, state, and federal regulations governing the disposal of asbestos or material containing asbestos.

CAUTION

To prevent uneven braking, all brake shoes and linings on an axle shall be repaired at the same time.

NOTE

Axle shaft, hub, and drum must be removed before brake shoes and linings can be replaced.

(a) Place brake shoe (1, Figure 2-207) and linings (3) in vise.

(b) Remove all rivets (2) holding linings (3) to brake shoe (1).

(c) Remove linings (3) from brake shoe (1).

(2) Cleaning. Refer to Section III.

WARNING

To prevent personal injury when steam cleaning, personnel shall wear proper protective equipment conforming to OSHA Standards.

To prevent serious personal injury when abrasive blasting with high air pressure (120-150 psi), in open areas or confined areas, personnel shall wear full-body protective equipment conforming to OSHA Standards.

Adequate ventilation shall be provided while using solvents and cleaners. Prolonged breathing of vapors should be avoided. Do not use near heat or open flames. Avoid prolonged contact with skin. Use of rubber gloves conforming to FED SPEC ZZ-G-381, face shield conforming to FED SPEC L-F-36, and other protective equipment is required according to OSHA Standards.

(a) Steam clean brake shoe (1) to remove dirt, grease, and oil.

(b) Abrasive blast brake shoe (1) to remove paint, rust, and corrosion.

(c) Paint brake shoe (1) according to TM 4750-15/1.

(3) Inspection

(a) Inspect contact surfaces of brake shoe (1) for wear spots or burs.

(b) Inspect rivet holes in brake shoe (1) for out-of-round.

(c) Inspect brake shoe (1) for bending and warping.

(d) Inspect shoe span (4). Shoe span (4) must not exceed 13-9/16 inches (34.45 cm).

(e) Inspect anchor pin end (5) and roller end (6) of brake shoe (1) for wear and cracks.

NOTE

If linings are worn unevenly and are less than 1/4 inch (1.59 millimeter (mm)) at the thinnest point, replace linings.

(f) Inspect linings for obvious grooves and uneven wear.

(g) Inspect linings for oil or grease spots on lining surface.

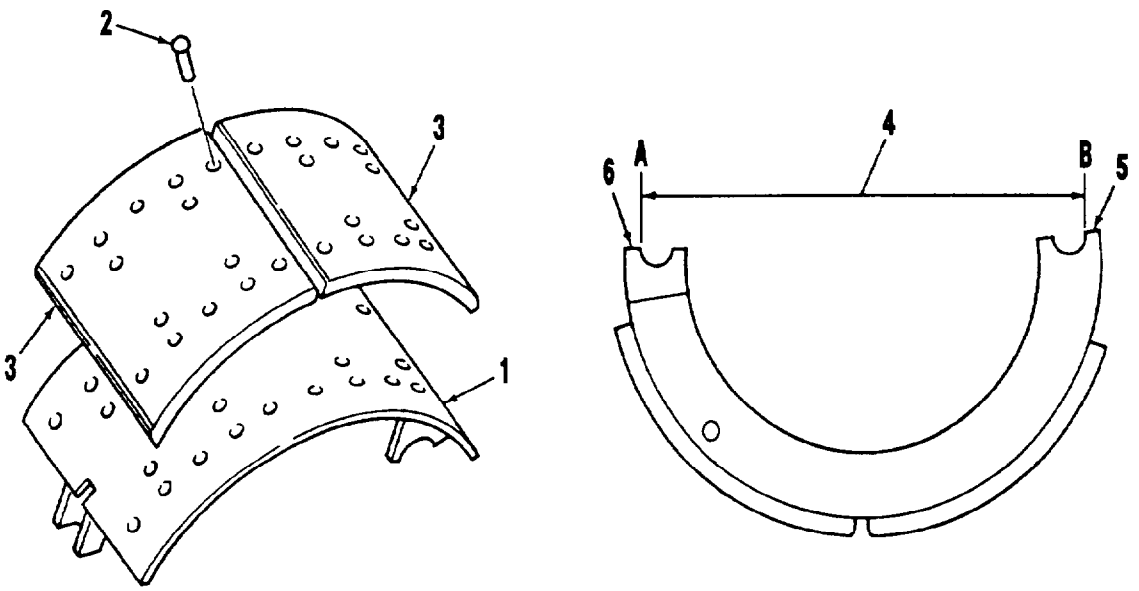

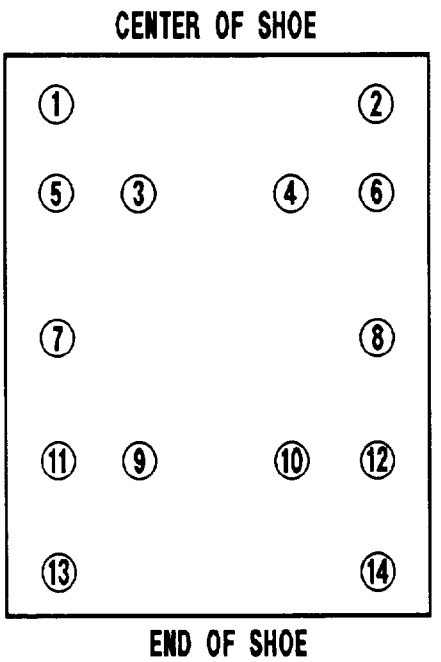

1. Brake Shoe
2. Rivets
3. Linings
4. Shoe Span
5. Anchor Pin End
6. Roller End

Figure 2-207. Brake Shoes and Linings (Axle No. 2) Disassembly and Assembly

(4) Repair

CAUTION

Do not attempt to use rivets more than one size over original. If this is not possible, discard brake shoe.

(a) Drill any out-of-round hole to the next larger rivet size.

(b) Remove burs from brake shoe (1) contact surface using a file or sandpaper.

(c) Replace brake shoe (1) damaged beyond repair or failing inspection.

(5) Assembly

(a) Clamp new linings (3) to brake shoe (1) so rivet holes line up.

(b) Install new rivets (2) in the order shown.

(c) Secure rivets (2).

(d) Check linings (3) to ensure a tight fit against brake shoe (1).

f. Camshaft and Slack Adjuster

(1) Disassembly. No disassembly required.

(2) Cleaning. Refer to Section III.

WARNING

To prevent personal injury when steam cleaning, personnel shall wear proper protective equipment conforming to OSHA Standards.

To prevent serious personal injury when abrasive blasting with high air pressure (120-150 psi), in open areas or confined areas, personnel shall wear full-body protective equipment conforming to OSHA Standards.

Adequate ventilation shall be provided while using solvents and cleaners. Prolonged breathing of vapors should be avoided. Do not use near heat or open flames. Avoid prolonged contact with skin. Use of rubber gloves conforming to FED SPEC ZZ-G-381, face shield conforming to FED SPEC L-F-36, and other protective equipment is required according to OSHA Standards.

When cleaning with compressed air, regulate to 25 psi maximum. Eyeshields must be worn to prevent injury to the eyes or complete loss of sight.

(a) Steam clean camshaft (6, Figure 2-159) and slack adjuster (3) to remove heavy dirt and grease.

(b) Abrasive blast camshaft (6) and slack adjuster (3) to remove paint, rust, and corrosion.

(c) Blow out all grease fitting passages to remove any dirt, caked grease, or obstructions. Use compressed air 25 psi maximum.

(d) Paint camshaft (6) and slack adjuster (3) according to TM 4750-15/1.

(3) Inspection

(a) Inspect camshaft (6) for cracks and signs of overheating.

(b) Inspect pin (2), shim(s) (5), and washer (7) for wear and damage.

(c) Inspect camshaft (6) splines for wear, rolling, peening, and cracks.

(d) Inspect slack adjuster (3) for wear, cracks, and damage.

(e) Inspect for proper grease fitting and operation (no binding).

(f) Inspect slack adjuster (3) splines for wear, cracks, rolling, and peening.

(4) Repair. Replace camshaft (6) and slack adjuster (3) damaged beyond repair or failing inspection.

(5) Assembly. No assembly required.

g. Brake Spider and Bracket

(1) Disassembly. No disassembly required.

(2) Cleaning. Refer to Section III.

WARNING

To prevent personal injury when steam cleaning, personnel shall wear proper protective equipment conforming to OSHA Standards.

To prevent serious personal injury when abrasive blasting with high air pressure (120-150 psi), in open areas or confined areas, personnel shall wear full-body protective equipment conforming to OSHA Standards.

Adequate ventilation shall be provided while using solvents and cleaners. Prolonged breathing of vapors should be avoided. Do not use near heat or open flames. Avoid prolonged contact with skin. Use of rubber gloves conforming to FED SPEC ZZ-G-381, face shield conforming to FED SPEC L-F-36, and other protective equipment is required according to OSHA Standards.

(a) Steam clean brake spider (6, Figure 2-160) and bracket (3) to remove heavy dirt and grease.

(b) Abrasive blast brake spider (6) and bracket (3) to remove paint, rust, and corrosion.

(c) Paint brake spider (6) and bracket (3) according to TM 4750-15/1.

(3) Inspection

(a) Inspect brake spider (6) and bracket (3) for cracks, breaks, deformation, and damage.

(b) Inspect threaded areas for crossed, smashed, burred, and damaged threads.

(4) Repair. Replace brake spider (6) and bracket (3) damaged beyond repair or failing inspection.

(5) Assembly. No assembly required.

2-288. SPRING AND SEAT ASSEMBLY

a. Disassembly

(1) Remove two capscrews (1, Figure 2-208) and washers (3) from spring seat (12).

(2) Remove four nuts (2), lockwashers (4), and two clamps (5) from spring seat (12). Discard lockwashers (4).

(3) Remove shoe (6) and leaf spring assembly (7) from spring seat (12).

(4) Remove oil seal (8) from spring seat (12). Discard oil seal (8).

(5) Remove bearing cone (9) from leaf spring seat (12).

NOTE

Remove bearing cups (10 and 11) only if bearing cones (9, Figure 2-161) and (9, Figure 2-208) or spring seat (12) will be replaced.

(6) Drive out two bearing cups (10 and 11) from spring seat (12).

(7) Remove nut (13) and capscrew (14) from leaf spring assembly (7).

(8) Separate three spring leaves (15), liners (16), and plate (17).

b. Cleaning. Refer to Section III.

WARNING

To prevent personal injury when steam cleaning, personnel shall wear proper protective equipment conforming to OSHA Standards.

To prevent serious personal injury when abrasive blasting with high air pressure (120-150 psi), in open areas or confined areas, personnel shall wear full-body protective equipment conforming to OSHA Standards.

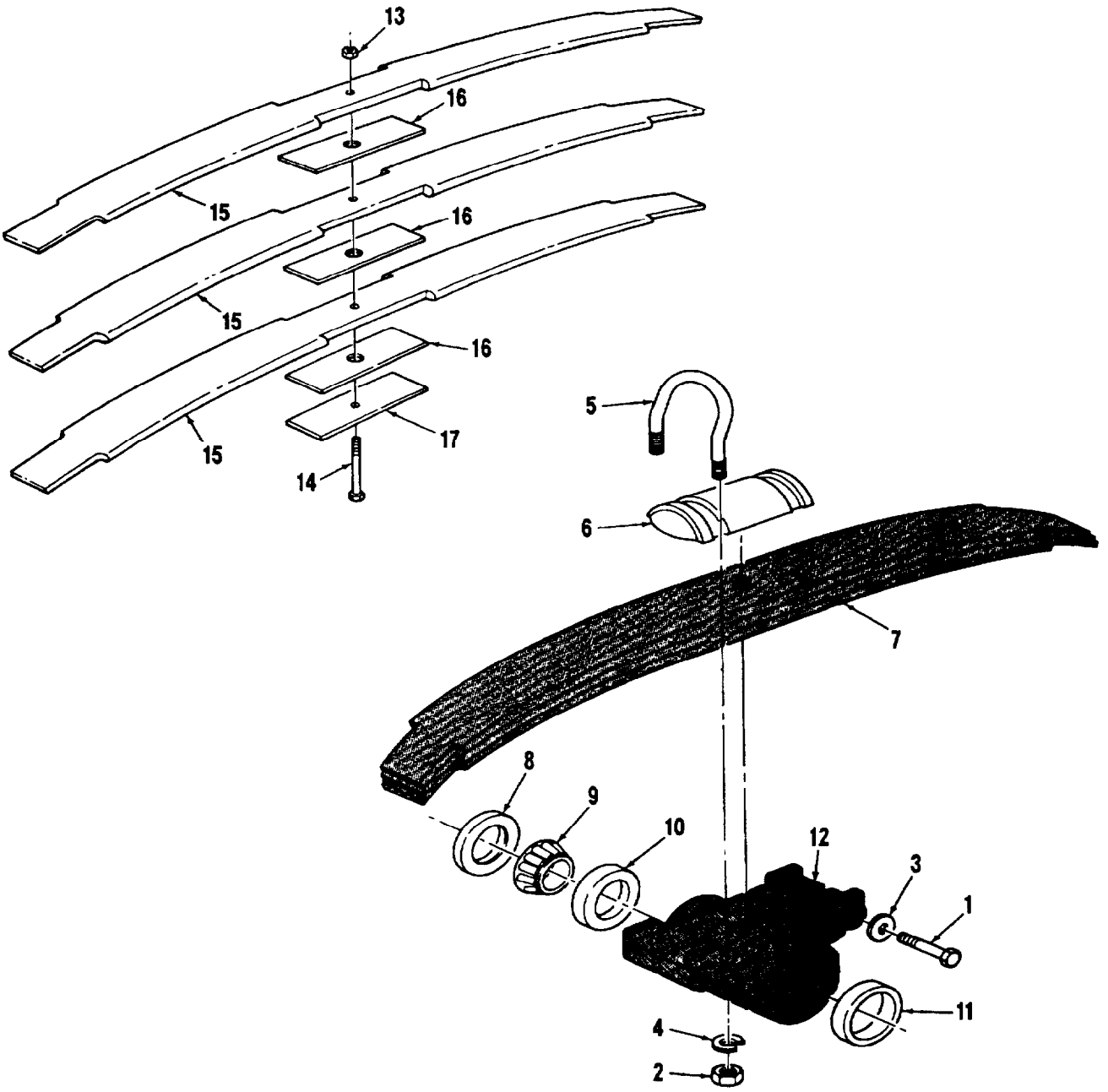

1. Capscrew (2)
2. Nut (4)
3. Washer (2)
4. Lockwasher (4)
5. Clamp (2)
6. Shoe
7. Leaf Spring Assembly
8. Oil Seal
9. Bearing Cone
10. Bearing Cup
11. Bearing Cup
12. Spring Seat
13. Nut
14. Capscrew
15. Spring Leaf (3)
16. Liner (3)
17. Plate

Figure 2-208. Spring and Seat Disassembly/Assembly

WARNING

Adequate ventilation shall be provided while using solvents and cleaners. Prolonged breathing of vapors should be avoided. Do not use near heat or open flames. Avoid prolonged contact with skin. Use of rubber gloves conforming to FED SPEC ZZ-G-381, face shield conforming to FED SPEC L-F-36, and other protective equipment is required according to OSHA Standards.

(1) Steam clean spring and seat assembly parts to remove dirt and grease.

(2) Abrasive blast spring and seat assembly parts to remove paint, rust, and corrosion.

(3) Paint spring and seat assembly parts according to TM 4750-15/1.

c. Inspection

(1) Inspect spring parts for breaks, deformation, and damage to spring leaves and liners.

(2) Inspect capscrews and spring clamps for cracks and damaged threads.

(3) Inspect spring seat for cracks, deformation, corrosion, and damage.

d. Repair

(1) Repair damaged threads according to TM 2350-45.

(2) Replace spring and seat assembly parts damaged beyond repair or failing inspection.

e. Assembly

NOTE

All spring leaves shall be lined up to within 1/4 inch (3.4 mm).

(1) Assemble three spring leaves (15, Figure 2-208), liners (16), and plate (17) with capscrew (14) and nut (13) as shown.

(2) Torque nut (13) to 110 ft-lb (149.2 N.m).

(3) Install bearing cups (10 and 11) in spring seat (12).

(4) Pack bearing cone (9) with grease conforming to MIL-G-10924.

(5) Install bearing cone (9) in spring seat (12).

NOTE

Seal lip must face toward bearing cone (9).

(6) Install new oil seal (8) in spring seat (12) and coat seal lip of oil seal (8) with a light coat of grease conforming to MIL-G-10924.

(7) Position leaf spring assembly (7) on spring seat (12) and set shoe (6) in place on leaf spring assembly (7).

(8) Install two clamps (5) with new lockwashers (4) and nuts (2). Tighten nuts (2) securely.

(9) Install two washers (3) and capscrews (1) in spring seat (12). Tighten capscrews (1) securely.

2-289. PRESSURE PROTECTION VALVE. Replace pressure protection valve (4, Figure 2-162) 100 percent.

2-290. QUICK BUILDUP AIR RESERVOIR

a. Disassembly. No further disassembly required.

b. Cleaning. Refer to Section III.

WARNING

Avoid contact with alkaline paint and rust removers, phosphate coating compounds, 1,1,1-Trichloroethane, and Dry Cleaning Solvent P-D-680. If solution comes in contact with skin, wash thoroughly with running water. Use of rubber gloves conforming to FED SPEC ZZ-G-381, face shield conforming to L-F-36, and other protective equipment is required according to OSHA Standards.

Adequate ventilation shall be provided while using solvents and cleaners. Prolonged breathing of vapors should be avoided. Do not use near heat or open flames. Avoid prolonged contact with skin. Use of rubber gloves conforming to FED SPEC ZZ-G-381, face shield conforming to FED SPEC L-F-36, and other protective equipment is required according to OSHA Standards.

(1) Submerge quick buildup air reservoir (7, Figure 2-163) in alkaline rust remover conforming to MIL-C-46156.

(2) Rinse interior of quick buildup air reservoir (7) thoroughly with pressurized cold water then dip in hot water.

(3) Drain water from quick buildup air reservoir (7) and air dry interior thoroughly.

(4) Coat the interior of quick buildup air reservoir (7) using Epoxy Primer, conforming to MIL-P-52192.

(5) Paint quick buildup air reservoir (7) according to TM 4750-15/1.

c. Inspection

(1) Inspect quick buildup air reservoir (7) interior for rust and corrosion.

NOTE

Minor dents not to exceed 1/16-inch deep and 1-inch long are acceptable provided there is not more than one dent in a 10-square inch area.

(2) Inspect quick buildup air reservoir (7) for cracks, dents, deformation, and damage.

(3) Inspect threaded areas for crossed, smashed, burred, and damaged threads.

(4) Inspect fittings and drain valves (18) for cracks, breaks, deformation, and damage.

(5) Inspect drain valves (18) for proper operation.

d. Repair

(1) Repair damaged threads according to TM 2350-45.

(2) Replace drain valves (18) and fittings damaged beyond repair or failing inspection.

(3) Replace quick buildup air reservoir (7) damaged beyond repair or failing inspection.

e. Assembly. No assembly required.

2-291. PRIORITY FLUID CONTROL VALVE

a. Disassembly

(1) Place priority fluid control valve (15, Figure 2-209) in a soft-jawed vice and remove plug (1) and O-ring (2). Discard O-ring (2).

(2) Remove plug (3) and O-ring (4). Discard O-ring (4).

CAUTION

To prevent parts damage, do not disturb setting of nut (5) or adjusting needle (6).

(3) Remove O-ring (7) from adjusting needle (6) if used. Discard O-ring (7).

CAUTION

Spring (8), stop pin (9), and spool (10) may fall out when plug (11) is removed. To prevent damage to spring (8), stop pin (9), and spool (10) use care when removing plug (11).

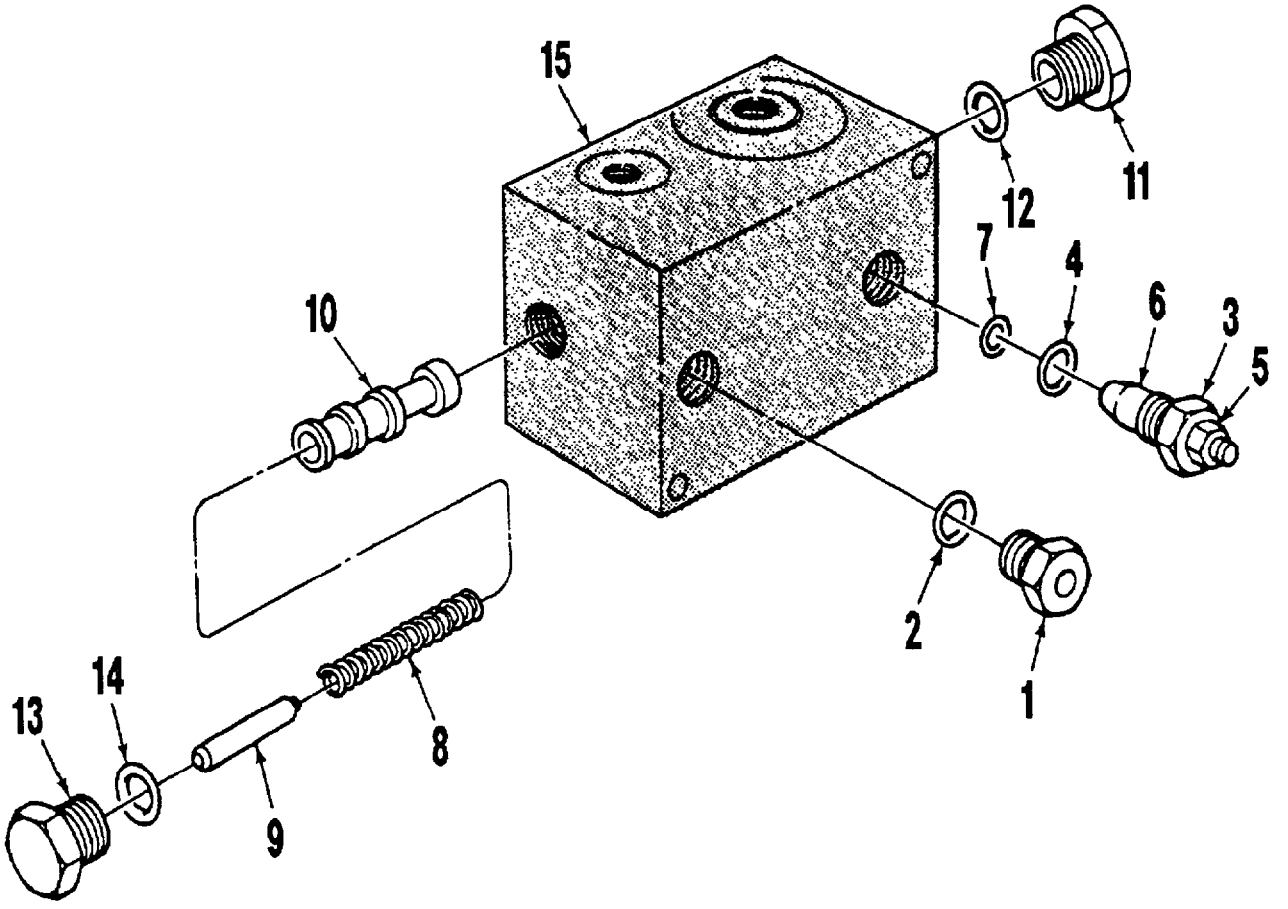

1. Plug
2. O-Ring
3. Plug
4. O-Ring
5. Nut
6. Adjusting Needle
7. O-Ring
8. Spring
9. Stop Pin
10. Spool
11. Plug
12. O-Ring
13. Plug
14. O-Ring
15. Priority Fluid Control Valve

Figure 2-209. Priority Fluid Control Valve Disassembly/Assembly

(4) Remove plug (11) and O-ring (12) from priority fluid control valve (15). Discard O-ring (12).

(5) Remove plug (13) and O-ring (14) from priority fluid control valve (15). Discard O-ring (14).

(6) Remove spring (8), stop pin (9), and spool (10) from priority fluid control valve (15).

b. Cleaning. Refer to Section III.

WARNING

Dry cleaning solvents are flammable. Do not clean parts near an open flame or in a smoking area. Contact with skin may cause irritation or cracking. Use of rubber gloves conforming to FED SPEC ZZ-G-381, face shield conforming to L-F-36, and other protective equipment is required in accordance with OSHA Standards.

Adequate ventilation shall be provided while using solvents and cleaners. Prolonged breathing of vapors should be avoided. Do not use near heat or open flames. Avoid prolonged contact with skin. Use of rubber gloves conforming to FED SPEC ZZ-G-381, face shield conforming to FED SPEC L-F-36, and other protective equipment is required according to OSHA Standards.

When cleaning with compressed air, regulate to 25 psi maximum. Eyeshields must be worn to prevent injury to the eyes or complete loss of sight.

(1) Remove loose dirt or grease with cloth or small brush.

(2) Clean priority fluid control valve using Dry Cleaning Solvent, FED SPEC P-D-680.

(3) Blow off excess solvent using compressed air 25 psi maximum.

(4) Blow out all passages using compressed air 25 psi maximum.

c. Inspection

(1) Inspect priority fluid control valve for cracks, breaks, deformation, and damage.

(2) Inspect threaded areas for crossed, smashed, burred, and damaged threads.

(3) Inspect spool for any burs, nicks, and damage.

(4) Inspect adjusting needle for any burs, nicks, and damage.

(5) Inspect spring and stop pin for cracks, breaks, and damage.

d. Repair

(1) Repair damaged threads according to TM 2350-45.

(2) Replace priority fluid control valve damaged beyond repair or failing inspection.

e. Assembly

(1) Lubricate new O-ring (12, Figure 2-209) with clean oil conforming to MIL-L-2104 and carefully install on plug (11).

(2) Install plug (11) in priority fluid control valve (15). Tighten plug (11) securely.

(3) Install spool (10), spring (8), and stop pin (9) in priority fluid control valve (15).

(4) Lubricate new O-ring (14) with clean oil conforming to MIL-L-2104 and carefully install on plug (13).

(5) Install plug (13) in priority fluid control valve (15). Tighten plug (13) securely.

(6) Lubricate new O-ring (2) with clean oil conforming to MIL-L-2104 and carefully install on plug (1).

(7) Install plug (1) in priority fluid control valve (15). Tighten plug (1) securely.

(8) Lubricate new O-ring (7) with clean oil conforming to MIL-L-2104 and carefully install on adjusting needle (6).

(9) Lubricate new O-ring (4) with clean oil conforming to MIL-L-2104 and carefully install on plug (3).

(10) Install plug (3) in priority fluid control valve (15). Tighten plug (3) securely.

2-292. DEMAND VALVE

a. Disassembly

WARNING

Cap (1, Figure 2-210) is under spring pressure. To prevent personal injury, remove cap (1) carefully from demand valve (4).

(1) Remove cap (1), O-ring (2), and plunger (3) from demand valve (4). Discard O-ring (2).

(2) Remove cap (5) and O-ring (6) from demand valve (4). Discard O-ring (6).

(3) Remove cap (7), O-ring (8), spring (9), and check (10) from demand valve (4). Discard O-ring (8).

(4) Remove retainer ring (11) and orifice (12) from demand valve (4).

(5) Remove cap (13), two O-rings (14 and 15), spacer (16), and spring (17) from demand valve (4). Discard O-rings (14 and 15).

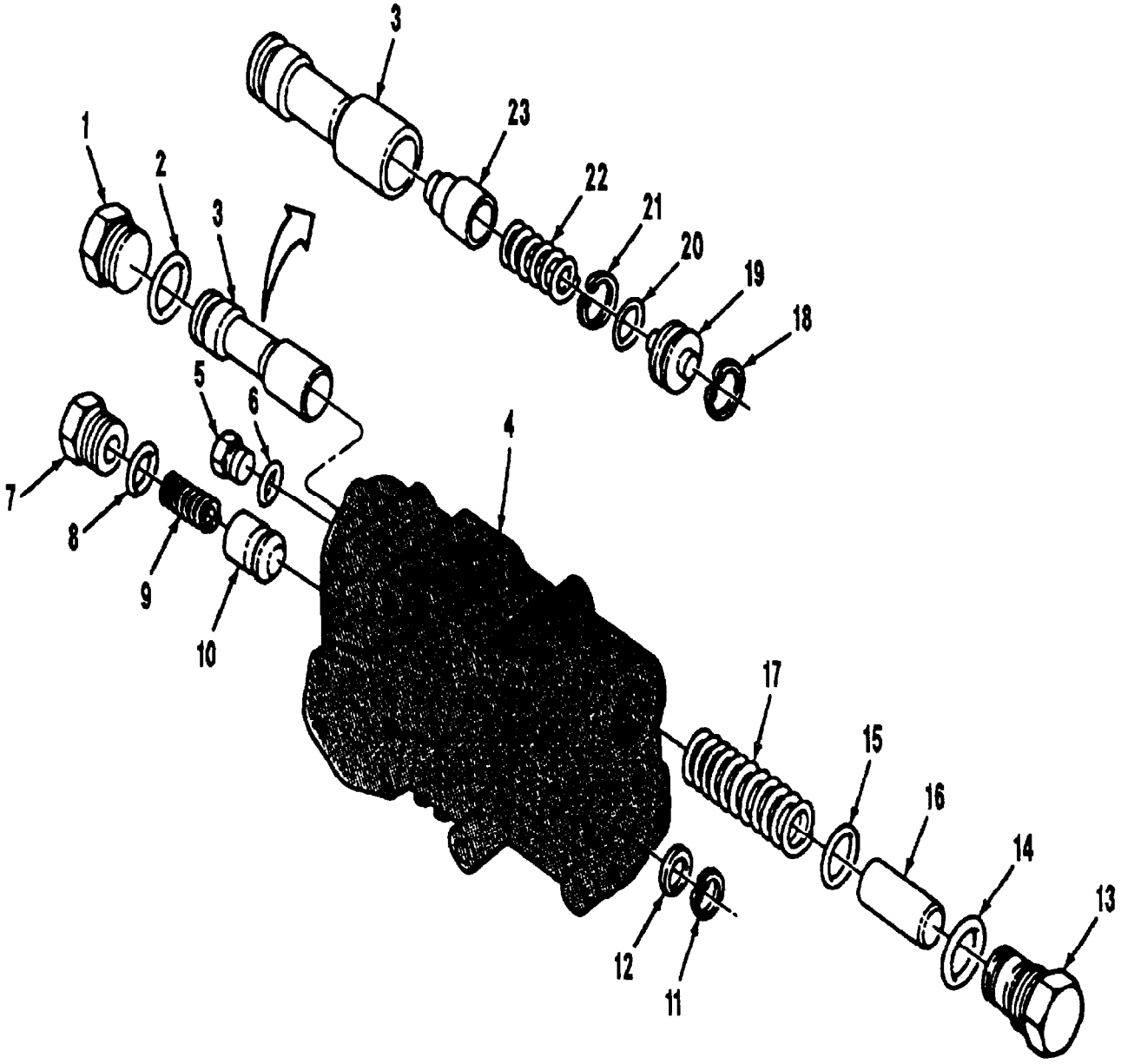

1. Cap
2. O-Ring
3. Plunger
4. Demand Valve
5. Cap
6. O-Ring
7. Cap
8. O-Ring
9. Spring
10. Check
11. Retainer Ring
12. Orifice
13. Cap
14. O-Ring
15. O-Ring
16. Spacer
17. Spring
18. Retainer Ring
19. Plug
20. O-Ring
21. Retainer Ring
22. Spring
23. Check

Figure 2-210. Demand Valve Disassembly/Assembly

(6) Remove retainer ring (18), plug (19), and O-ring (20) from plunger (3). Discard O-ring (20).

(7) Remove retainer ring (21), spring (22), and check (23) from plunger (3).

b. Cleaning. Refer to Section III.

WARNING

Dry cleaning solvents are flammable. Do not clean parts near an open flame or in a smoking area. Contact with skin may cause irritation or cracking. Use of rubber gloves conforming to FED SPEC ZZ-G-381, face shield conforming to L-F-36, and other protective equipment is required in accordance with OSHA Standards.

Adequate ventilation shall be provided while using solvents and cleaners. Prolonged breathing of vapors should be avoided. Do not use near heat or open flames. Avoid prolonged contact with skin. Use of rubber gloves conforming to FED SPEC ZZ-G-381, face shield conforming to FED SPEC L-F-36, and other protective equipment is required according to OSHA Standards.

When cleaning with compressed air, regulate to 25 psi maximum. Eyeshields must be worn to prevent injury to the eyes or complete loss of sight.

(1) Remove loose dirt or grease with cloth or small brush.

(2) Clean demand valve using Dry Cleaning Solvent, FED SPEC P-D-680.

(3) Blow off excess solvent using compressed air 25 psi maximum.

(4) Blow out all passages using compressed air 25 psi maximum.

c. Inspection

(1) Inspect demand valve for cracks, breaks, deformation, and damage.

(2) Inspect threaded areas for crossed, smashed, burred, and damaged threads.

(3) Inspect plunger for cracks, breaks, nicks, gouges, wear, and damage.

(4) Inspect checks for cracks, breaks, nicks, gouges, wear, and damage.

(5) Inspect springs for cracks, breaks, and collapsed condition.

d. Repair

(1) Repair damaged threads according to TM 2350-45.

(2) Replace demand valve and parts damaged beyond repair or failing inspection.

e. Assembly

NOTE

Lubricate all parts with clean oil clean oil conforming to MIL-L-2104 before assembly.

(1) Install check (23, Figure 2-210), spring (22) and retainer ring (21) in plunger (3).

(2) Install new O-ring (20) on plug (19).

(3) Install plug (19) and retainer ring (18) in demand valve (4).

(4) Install orifice (12) and retainer ring (11) in demand valve (4).

(5) Install check (10), spring (9), new O-ring (8), and cap (7) in demand valve (4). Tighten cap (7) securely.

(6) Install cap (5) and new O-ring (6) in demand valve (4). Tighten cap (5) securely.

(7) Install spring (17), spacer (16), two new O-rings (14 and 15), and cap (13) in demand valve (4). Tighten cap (13) securely.

(8) Install plunger (3), new O-ring (2), and cap (1) in demand valve (4). Tighten cap (1) securely.

2-293. HYDRAULIC STEERING MANIFOLD

a. Disassembly. No disassembly required.

b. Cleaning. Refer to Section III.

WARNING

Dry cleaning solvents are flammable. Do not clean parts near an open flame or in a smoking area. Contact with skin may cause irritation or cracking. Use of rubber gloves conforming to FED SPEC ZZ-G-381, face shield conforming to L-F-36, and other protective equipment is required in accordance with OSHA Standards.

Adequate ventilation shall be provided while using solvents and cleaners. Prolonged breathing of vapors should be avoided. Do not use near heat or open flames. Avoid prolonged contact with skin. Use of rubber gloves conforming to FED SPEC ZZ-G-381, face shield conforming to FED SPEC L-F-36, and other protective equipment is required according to OSHA Standards.

When cleaning with compressed air, regulate to 25 psi maximum. Eyeshields must be worn to prevent injury to the eyes or complete loss of sight.

(1) Remove loose dirt or grease with cloth or small brush.

(2) Clean hydraulic steering manifold (13, Figure 2-166) using Dry Cleaning Solvent, FED SPEC P-D-680.

(3) Blow off excess solvent using compressed air 25 psi maximum.

(4) Blow out all passages using compressed air 25 psi maximum.

c. Inspection

(1) Inspect hydraulic steering manifold (13) for cracks, breaks, deformation, and damage.

(2) Inspect threaded areas for crossed, smashed, burred, and damaged threads.

d. Repair

(1) Repair damaged threads according to TM 2350-45.

(2) Replace hydraulic steering manifold (13) damaged beyond repair or failing inspection.

e. Assembly. No assembly required.

2-294. STEERING RELIEF VALVE

a. Disassembly. No disassembly required.

b. Cleaning. Refer to Section III.

WARNING

Dry cleaning solvents are flammable. Do not clean parts near an open flame or in a smoking area. Contact with skin may cause irritation or cracking. Use of rubber gloves conforming to FED SPEC ZZ-G-381, face shield conforming to L-F-36, and other protective equipment is required in accordance with OSHA Standards.

Adequate ventilation shall be provided while using solvents and cleaners. Prolonged breathing of vapors should be avoided. Do not use near heat or open flames. Avoid prolonged contact with skin. Use of rubber gloves conforming to FED SPEC ZZ-G-381, face shield conforming to FED SPEC L-F-36, and other protective equipment is required according to OSHA Standards.

When cleaning with compressed air, regulate to 25 psi maximum. Eyeshields must be worn to prevent injury to the eyes or complete loss of sight.

(1) Remove loose dirt or grease with cloth or small brush.

(2) Clean steering relief valve (8, Figure 2-167) using Dry Cleaning Solvent, FED SPEC P-D-680.

(3) Blow off excess solvent using compressed air 25 psi maximum.

(4) Blow out all passages using compressed air 25 psi maximum.

c. Inspection

(1) Inspect steering relief valve (8) for cracks, breaks, deformation, and damage.

(2) Inspect threaded areas for crossed, smashed, burred, and damaged threads.

d. Repair

(1) Repair damaged threads according to TM 2350-45.

(2) Replace steering relief valve (8) damaged beyond repair or failing inspection.

e. Assembly. No assembly required.

2-295. FRONT AIR MANIFOLD

a. Disassembly. No disassembly required.

b. Cleaning. Refer to Section III.

WARNING

Dry cleaning solvents are flammable. Do not clean parts near an open flame or in a smoking area. Contact with skin may cause irritation or cracking. Use of rubber gloves conforming to FED SPEC ZZ-G-381, face shield conforming to L-F-36, and other protective equipment is required in accordance with OSHA Standards.

Adequate ventilation shall be provided while using solvents and cleaners. Prolonged breathing of vapors should be avoided. Do not use near heat or open flames. Avoid prolonged contact with skin. Use of rubber gloves conforming to FED SPEC ZZ-G-381, face shield conforming to FED SPEC L-F-36, and other protective equipment is required according to OSHA Standards.

When cleaning with compressed air, regulate to 25 psi maximum. Eyeshields must be worn to prevent injury to the eyes or complete loss of sight.

(1) Remove loose dirt or grease with cloth or small brush.

(2) Clean front air manifold (15, Figure 2-168) using Dry Cleaning Solvent, FED SPEC P-D-680.

(3) Blow off excess solvent using compressed air 25 psi maximum.

(4) Blow out all passages using compressed air 25 psi maximum.

c. Inspection

(1) Inspect front air manifold (15) for cracks, breaks, deformation, and damage.

(2) Inspect threaded areas for crossed, smashed, burred, and damaged threads.

d. Repair

(1) Repair damaged threads according to TM 2350-45.

(2) Replace front air manifold (15) damaged beyond repair or failing inspection.

e. Assembly. No assembly required.

2-296. GLAD HANDS

a. Disassembly. No disassembly required.

b. Cleaning. Refer to Section III.

WARNING

Dry cleaning solvents are flammable. Do not clean parts near an open flame or in a smoking area. Contact with skin may cause irritation or cracking. Use of rubber gloves conforming to FED SPEC ZZ-G-381, face shield conforming to L-F-36, and other protective equipment is required in accordance with OSHA Standards.

Adequate ventilation shall be provided while using solvents and cleaners. Prolonged breathing of vapors should be avoided. Do not use near heat or open flames. Avoid prolonged contact with skin. Use of rubber gloves conforming to FED SPEC ZZ-G-381, face shield conforming to FED SPEC L-F-36, and other protective equipment is required according to OSHA Standards.

When cleaning with compressed air, regulate to 25 psi maximum. Eyeshields must be worn to prevent injury to the eyes or complete loss of sight.

(1) Remove loose dirt or grease with cloth or small brush.

(2) Clean glad hands (2, Figure 2-169) using Dry Cleaning Solvent, FED SPEC P-D-680.

(3) Blow off excess solvent using compressed air 25 psi maximum.

(4) Blow out all passages using compressed air 25 psi maximum.

c. Inspection

(1) Inspect glad hands (2) for cracks, breaks, deformation, and damage.

(2) Inspect rubber gasket for weather checking, cracks, breaks, wear, and damage.

(3) Inspect threaded areas for crossed, smashed, burred, and damaged threads.

d. Repair

(1) Repair damaged threads according to TM 2350-45.

(2) Replace weather checked, cracked, broken, worn, or damaged rubber gasket.

(3) Replace glad hands (2) damaged beyond repair or failing inspection.

e. Assembly. No assembly required.

2-297. BALL VALVE. Replace ball valve (4, Figure 2-170) 100 percent.

2-298. RELAY VALVES

a. Disassembly

(1) Press down on the exhaust cover assembly (1, Figure 2-211) and remove snapring (2).

(2) Release force on exhaust cover assembly (1) slowly to relax tension on spring (3).

(3) Remove exhaust cover assembly (1) from body (8).

(4) Remove O-rings (4 and 5) from exhaust cover assembly (1). Discard O-rings (4 and 5).

(5) Remove spring (3), inlet/exhaust valve (6), and valve retainer (7) from body (8).

NOTE

Matchmark cover (9) and body (8) before removal to ensure proper assembly.

(6) Mount body (8) in a soft-jawed vise.

(7) Remove four capscrews (10), lockwashers (11), bracket (12), cover (9), and O-ring (13) from body (8). Discard lockwashers (11) and O-ring (13).

(8) Remove piston (14) and O-ring (15) from body (8). Discard O-ring (15).

b. Cleaning. Refer to Section III.

WARNING

Dry cleaning solvents are flammable. Do not clean parts near an open flame or in a smoking area. Contact with skin may cause irritation or cracking. Use of rubber gloves conforming to FED SPEC ZZ-G-381, face shield conforming to L-F-36, and other protective equipment is required in accordance with OSHA Standards.

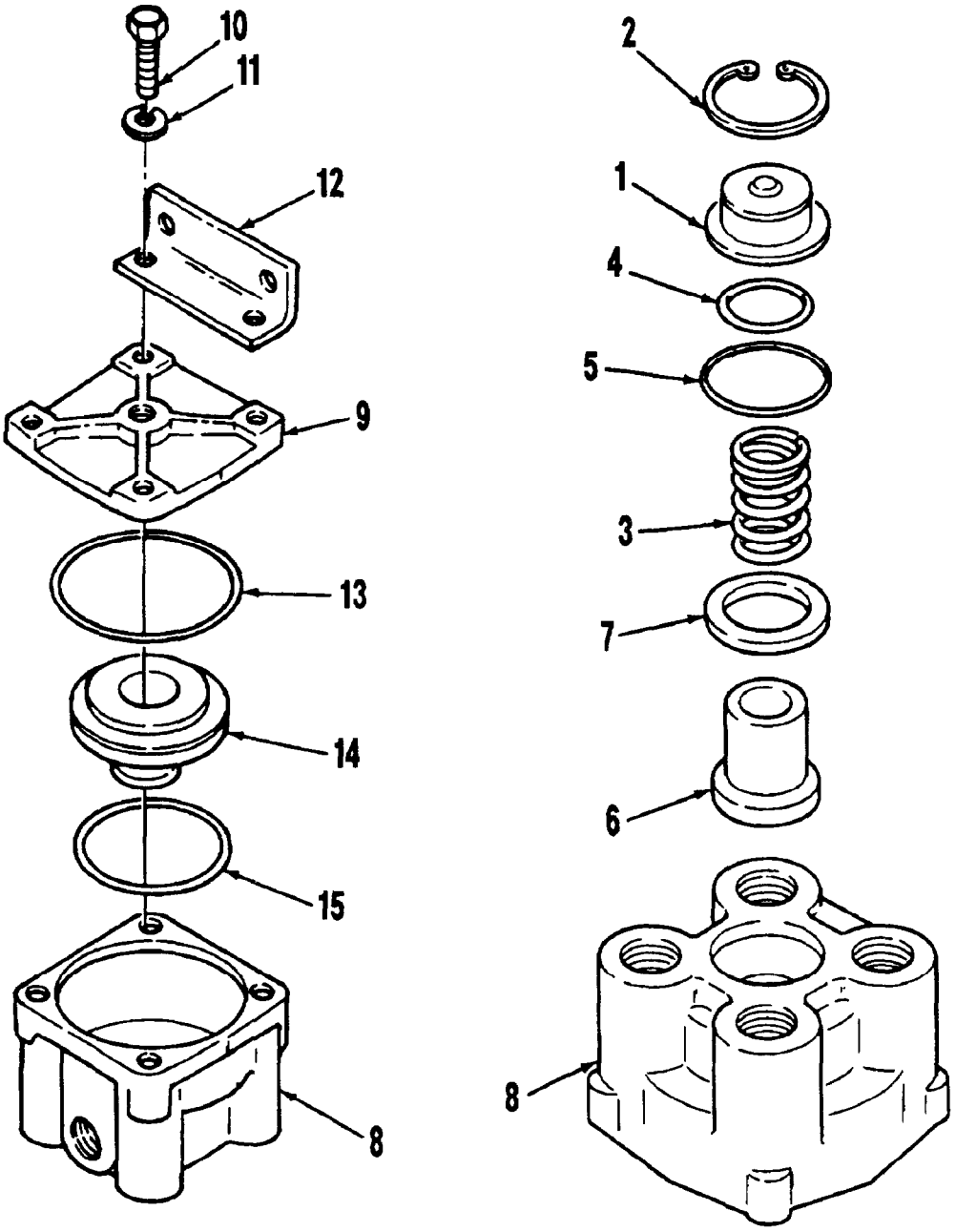

1. Exhaust Cover Assembly
2. Snapring
3. Spring
4. O-Ring
5. O-Ring
6. Inlet/Exhaust Valve
7. Valve Retainer
8. Body
9. Cover
10. Capscrew (4)
11. Lockwasher (4)
12. Bracket
13 O-Ring
14. Piston
15. O-Ring

Figure 2-211. Relay Valves Disassembly/Assembly

WARNING

Adequate ventilation shall be provided while using solvents and cleaners. Prolonged breathing of vapors should be avoided. Do not use near heat or open flames. Avoid prolonged contact with skin. Use of rubber gloves conforming to FED SPEC ZZ-G-381, face shield conforming to FED SPEC L-F-36, and other protective equipment is required according to OSHA Standards.

When cleaning with compressed air, regulate to 25 psi maximum. Eyeshields must be worn to prevent injury to the eyes or complete loss of sight.

(1) Remove loose dirt or grease with cloth or small brush.

(2) Clean relay valves using Dry Cleaning Solvent, FED SPEC P-D-680.

(3) Blow off excess solvent using compressed air 25 psi maximum.

(4) Blow out all passages using compressed air 25 psi maximum.

c. Inspection

(1) Inspect body for cracks, breaks, nicks, gouges, wear, deformation, and damage.

(2) Inspect exhaust cover assembly for cracks, breaks, nicks, gouges, wear, and damage.

(3) Inspect spring for cracks, breaks, and collapsed condition.

(4) Inspect inlet/exhaust valve for cracks, breaks, nicks, gouges, wear, and damage.

(5) Inspect cover for cracks, breaks, deformation, and damage.

(6) Inspect bracket for cracks, breaks, deformation, and damage.

(7) Inspect piston for cracks, breaks, nicks, gouges, wear, and damage.

(8) Inspect threaded areas for crossed, smashed, burred, and damaged threads.

d. Repair

(1) Repair damaged threads according to TM 2350-45.

(2) Replace relay valve damaged beyond repair or failing inspection.

e. Assembly

(1) Lightly grease inside surface of body (8, Figure 2-211), piston (14), and new O-rings (13 and 15). Use Lithium Grease, Lubriplate 5555.

(2) Install O-ring (15) on piston (14).

(3) Install piston (14) in body (8).

(4) Install O-ring (13) in cover (9).

(5) Align matchmarks made during disassembly and install cover (9) on body (8).

(6) Install mounting bracket (12) on cover (9) with two new lockwashers (11) and capscrews (10).

(7) Install two new lockwashers (11) and capscrews (10) in cover (9) and torque four capscrews (10), securing cover (9) and bracket (12) to body (8), to 80-120 inch-pounds (9.04 to 13.56 N.m).

(8) Mount body (8) in a soft jawed vise with cover (9) down.

(9) Lightly grease new O-rings (4 and 5) and exhaust cover assembly (1). Use Lithium Grease, Lubriplate 5555.

(10) Lightly grease valve retainer (7) and inlet/exhaust valve (6) and install body (8). Use Lithium Grease, Lubriplate 5555.

(11) Install spring (3) in body (8).

(12) Install exhaust cover assembly (1) in body (8).

(13) Depress exhaust cover assembly (1) and install snapring (2). Ensure snapring (2) is seated in its groove in body (8).

2-299. CHECK VALVES

a. Disassembly. No disassembly required

b. Cleaning. Refer to Section III.

WARNING

Dry cleaning solvents are flammable. Do not clean parts near an open flame or in a smoking area. Contact with skin may cause irritation or cracking. Use of rubber gloves conforming to FED SPEC ZZ-G-381, face shield conforming to L-F-36, and other protective equipment is required in accordance with OSHA Standards.

Adequate ventilation shall be provided while using solvents and cleaners. Prolonged breathing of vapors should be avoided. Do not use near heat or open flames. Avoid prolonged contact with skin. Use of rubber gloves conforming to FED SPEC ZZ-G-381, face shield conforming to FED SPEC L-F-36, and other protective equipment is required according to OSHA Standards.

When cleaning with compressed air, regulate to 25 psi maximum. Eyeshields must be worn to prevent injury to the eyes or complete loss of sight.

CAUTION

To prevent damage to check valve, plug all openings before cleaning with solvent.

(1) Remove loose dirt or grease with cloth or small brush.

(2) Clean check valves (10, Figure 2-172) using Dry Cleaning Solvent, FED SPEC P-D-680.

(3) Blow off excess solvent using compressed air 25 psi maximum.

(4) Blow out all passages using compressed air 25 psi maximum.

c. Inspection

(1) Inspect check valves (10) for cracks, breaks, deformation, and damage.

(2) Inspect threaded areas for crossed, smashed, burred, and damaged threads.

d. Repair

(1) Repair damaged threads according to TM 2350-45.

(2) Replace check valves (10) damaged beyond repair or failing inspection.

e. Assembly. No assembly required.

2-300. REAR AIR MANIFOLD

a. Disassembly. No disassembly required.

b. Cleaning. Refer to Section III.

WARNING

Dry cleaning solvents are flammable. Do not clean parts near an open flame or in a smoking area. Contact with skin may cause irritation or cracking. Use of rubber gloves conforming to FED SPEC ZZ-G-381, face shield conforming to L-F-36, and other protective equipment is required in accordance with OSHA Standards.

Adequate ventilation shall be provided while using solvents and cleaners. Prolonged breathing of vapors should be avoided. Do not use near heat or open flames. Avoid prolonged contact with skin. Use of rubber gloves conforming to FED SPEC ZZ-G-381, face shield conforming to FED SPEC L-F-36, and other protective equipment is required according to OSHA Standards.

When cleaning with compressed air, regulate to 25 psi maximum. Eyeshields must be worn to prevent injury to the eyes or complete loss of sight.

(1) Remove loose dirt or grease with cloth or small brush.

(2) Clean rear air manifold (5, Figure 2-173) using Dry Cleaning Solvent, FED SPEC P-D-680.

(3) Blow off excess solvent using compressed air 25 psi maximum.

(4) Blow out all passages using compressed air 25 psi maximum.

c. Inspection

(1) Inspect rear air manifold (5) for cracks, breaks, deformation, and damage.

(2) Inspect threaded areas for crossed, smashed, burred, and damaged threads.

d. Repair

(1) Repair damaged threads according to TM 2350-45.

(2) Replace rear air manifold (5) damaged beyond repair or failing inspection.

e. Assembly. No assembly required.

2-301. STEERING SHAFT - FRAME 90° GEAR BOX TO POWER STEERING GEAR

a. Disassembly. No disassembly required.

b. Cleaning. Refer to Section III. Clean steering shaft assembly (6, Figure 2-174) using Dry Cleaning Solvent, FED SPEC P-D-680 and allow to air dry thoroughly.

c. Inspection

(1) Inspect splined yokes (3) and linkage for trueness, cracks, peening, or burs.

(2) Inspect universal joints for play at bearing caps, binding, cracks, and damage.

(3) Inspect steering shaft assembly (6) for cracks, breaks, deformation, and damage.

d. Repair. Replace steering shaft assembly (6) damaged beyond repair or failing inspection.

e. Assembly. No assembly required.

2-302. PITMAN ARM

a. Disassembly. No disassembly required.

b. Cleaning. Refer to Section III.

WARNING

To prevent personal injury when steam cleaning, personnel shall wear proper protective equipment conforming to OSHA Standards.

WARNING

To prevent serious personal injury when abrasive blasting with high air pressure (120-150 psi), in open areas or confined areas, personnel shall wear full-body protective equipment conforming to OSHA Standards.

Adequate ventilation shall be provided while using solvents and cleaners. Prolonged breathing of vapors should be avoided. Do not use near heat or open flames. Avoid prolonged contact with skin. Use of rubber gloves conforming to FED SPEC ZZ-G-381, face shield conforming to FED SPEC L-F-36, and other protective equipment is required according to OSHA Standards.

(1) Steam clean pitman arm (5, Figure 2-175) to remove dirt and grease.

(2) Abrasive blast pitman arm (5) crank to remove paint, rust, and corrosion.

(3) Paint pitman arm (5) according to TM 4750-15/1.

c. Inspection

(1) Inspect pitman arm (5) for cracks, breaks, deformation, and damage.

(2) Inspect pitman arm (5) splines for rolling, peening, burs, flat spots, and damage.

(3) Inspect threaded areas for crossed, smashed, burred, and damaged threads.

d. Repair. Replace pitman arm (5) damaged beyond repair or failing inspection.

e. Assembly. No assembly required.

2-303. POWER STEERING GEAR. Refer to TM 2320-34/13 for disassembly, cleaning, inspection, repair, and assembly of power steering gear (3, Figure 2-176).

2-304. LOCKOUT STRUTS

a. Disassembly. No disassembly required.

b. Cleaning. Refer to Section III.

WARNING

To prevent personal injury when steam cleaning, personnel shall wear proper protective equipment conforming to OSHA Standards.

To prevent serious personal injury when abrasive blasting with high air pressure (120-150 psi), in open areas or confined areas, personnel shall wear full-body protective equipment conforming to OSHA Standards.

WARNING

Adequate ventilation shall be provided while using solvents and cleaners. Prolonged breathing of vapors should be avoided. Do not use near heat or open flames. Avoid prolonged contact with skin. Use of rubber gloves conforming to FED SPEC ZZ-G-381, face shield conforming to FED SPEC L-F-36, and other protective equipment is required according to OSHA Standards.

(1) Steam clean lockout struts (4, Figure 2-177) to remove dirt and grease.

(2) Abrasive blast lockout struts (4) to remove paint, rust, and corrosion.

(3) Paint lockout struts (4) according to TM 4750-15/1.

c. Inspection

(1) Inspect lockout struts (4) for cracks, breaks, deformation, wear, and damage.

(2) Inspect lockout struts (4) for damaged mounting hardware.

(3) Inspect threaded areas for crossed, smashed, burred, and damaged threads.

d. Repair. Replace lockout struts (4) damaged beyond repair or failing inspection.

e. Assembly. No assembly required.

2-305. CHASSIS WIRING HARNESS

a. Disassembly. Disassemble chassis wiring harness (22, Figure 2-178) as necessary to effect repairs.

WARNING

Adequate ventilation shall be provided while using solvents and cleaners. Prolonged breathing of vapors should be avoided. Do not use near heat or open flames. Avoid prolonged contact with skin. Use of rubber gloves conforming to FED SPEC ZZ-G-381, face shield conforming to FED SPEC L-F-36, and other protective equipment is required according to OSHA Standards.

b. Cleaning. Refer to Section III. Clean chassis wiring harness (22) as required. Do not soak in solvent, but clean with a cloth or brush dampened with Isopropyl Alcohol, FED SPEC TT-I-735.

c. Inspection

(1) Inspect leads for damaged connectors, wires, pins, and deteriorated, cracked or swelled grommets.

(2) Inspect rubber covering for weather checks and cracks.

(3) Inspect taped area of harness for loose, frayed, oil-soaked or torn condition.

(4) Inspect terminal and connector ends for loose condition.

(5) Check chassis wiring harness (22) for continuity using a volt/ohm meter. Refer to TM 2320-20/12 for wiring diagram.

d. Repair

(1) Replace or repair damaged connectors, pins, and grommets as necessary.

(2) Replace defective wires as necessary.

(3) Replace illegible circuit tags.

(4) Tape defective areas of harness as necessary, using Tape, Insulating, Electric, MIL-I-15126, NSN 5970-00-419-3164.

e. Assembly. Assemble chassis wiring harness (22) as necessary.

2-306. DATA PLATES AND PLACARDS

a. Disassembly. No disassembly required.

WARNING

Adequate ventilation shall be provided while using solvents and cleaners. Prolonged breathing of vapors should be avoided. Do not use near heat or open flames. Avoid prolonged contact with skin. Use of rubber gloves conforming to FED SPEC ZZ-G-381, face shield conforming to FED SPEC L-F-36, and other protective equipment is required according to OSHA Standards.

b. Cleaning. Refer to Section III. Hand clean data plates and placards using soap conforming to MIL-D-16791 and water.

c. Inspection. Inspect data plates and placards for legibility, accurate data, and damage.

d. Repair. Replace data plates and placards damaged beyond repair or failing inspection. Refer to Paragraph 1-6 for data plate stamping, location, and description.

e. Assembly. No assembly required.

2-307. FRAME ASSEMBLY

a. Disassembly. No disassembly required.

b. Cleaning. Refer to Section III.

WARNING

To prevent personal injury when steam cleaning, personnel shall wear proper protective equipment conforming to OSHA Standards.

WARNING

To prevent serious personal injury when abrasive blasting with high air pressure (120-150 psi), in open areas or confined areas, personnel shall wear full-body protective equipment conforming to OSHA Standards.

Adequate ventilation shall be provided while using solvents and cleaners. Prolonged breathing of vapors should be avoided. Do not use near heat or open flame. Avoid prolonged contact with skin. Use of rubber gloves conforming to FED SPEC ZZ-G-381, face shield conforming to L-F-36, and other protective equipment is required according to OSHA Standards.

(1) Steam clean frame assembly to remove dirt and grease.

(2) Abrasive blast frame assembly remove paint, rust, and corrosion.

(3) Paint frame assembly according to TM 4750-15/1.

c. Inspection. Inspect frame assembly for cracks, bends, deformation, and damage.

d. Repair. Refer to Technical Bulletin (TB) 9-2300-247-40 for repair of frame assembly.

e. Assembly. No assembly required.

Section V. REASSEMBLY AND INSTALLATION

2-308. REASSEMBLY AND INSTALLATION. Reassembly and installation of the Power Unit, Front 12-1/2 Ton, 4x4, MK48, Mod 0 major components are in the reverse order of disassembly. Reassemble and install MK48 major components as necessary to effect completion of overhaul or IROAN repair procedures.

NOTE

Install air lines and hydraulic lines as necessary before reassembly. Install them as noted before removal.

2-309. FRAME ASSEMBLY

a. Lift front of MK48 using an overhead lifting device.

b. Place two 10-ton jack stands under left and right frame rails (2 and 7, Figure 2-3) in left and right front positions (1 and 8) then lower front of MK48 on jack stands. Ensure front tires, when installed, clear floor and weight of MK48 is supported by jack stands.

c. Lift rear of MK48 using an overhead lifting device.

NOTE

If articulation joint (5) is removed, place jack stands at center rear position (6) under center rear of frame.

d. Place two 10-ton jack stands under articulation joint (5) in left and right rear positions (3 and 4) then lower rear of MK48 on jack stands. Ensure rear tires, when installed, clear floor and weight of MK48 is supported by jack stands.

2-310. DATA PLATES AND PLACARDS

NOTE

Data plates or placards may be secured by sheet metal screws or pop rivets. Use appropriate screwdriver when installing data plates or placards with sheet metal screws.

Use correct size rivets and proper installation tool when using pop rivets to secure data plates or placards.

Installation of data plates or placards is basically the same regardless of which type fastener is used.

a. Position data plate(s) or placard(s) (2, Figure 2-179) on mounting surface (3).

b. Secure data plate(s) or placard(s) (2) to mounting surface (3) with four new drive screws (1).

c. Tap drive screws (1) with a hammer to seat in place.

2-311. CHASSIS WIRING HARNESS

NOTE

Match wire numbers on new harness to wire numbers remaining on vehicle.

Install nylon ties as noted before removal.

a. Position chassis wiring harness (22, Figure 2-178) on frame assembly (24) as noted before removal.

b. Install connector (21) in bracket (23).

c. Install new lockring (20) and nut (19) on connector (21). Tighten nut (19) securely.

NOTE

Connector cover (18) cannot be installed until lockout strut has been installed.

d. Install connectors (14 and 15) in bracket (11) as noted before removal.

e. Install two new lockrings (17) on connectors (14 and 15).

f. Install two nuts (16) on connectors (14 and 15). Tighten nuts (16) securely.

g. Connect connector (12) to connector (14). Tighten connector (12) securely.

h. Connect connector (13) to connector (15). Tighten connector (13) securely.

i. Install ground wire terminal (10) on bracket (11) using capscrew (9) and nut (8). Tighten nut (8) securely.

NOTE

Perform step i.1. on LVSA1 series vehicles only.

i.1. Install ground wire terminal (11.2) on bracket (11) using capscrew (11.3) and new locknut (11.1). Tighten locknut (11.1) securely.

j. Connect plug (7). Ensure plug (7) is connected properly.

k. Install three terminals (2, 3, and 4) on frame assembly (24) using new star washer (5), capscrew (6), and nut (1). Tighten nut (1) securely.

NOTE

Perform step k.1. on LVSA1 series vehicles only.

k.1. Install three terminals (6.4, 6.3, and 6.2) on frame assembly (24) using capscrew (6.5) and new locknut (6.1). Tighten locknut (6.1) securely.

2-312. LOCKOUT STRUTS

NOTE

This procedure works for both lockout struts.

a. Install lockout strut (4, Figure 2-177) on frame assembly (5).

b. Install pin (2) in upper lockout strut suspension lock link (3).

c. Install cotter hairpin (1) in pin (2).

d. Install connector cover (18, Figure 2-178) on connector (21).

2-313. POWER STEERING GEAR

WARNING

The power steering gear weighs approximately 70 pounds and is located in an awkward spot. To prevent personal injury or damage to equipment, use an overhead lifting device and lifting sling to install power steering gear on MK48.

Gloves must be worn to protect hands from sharp edges and cuts. To prevent personal injury, be very careful not to get hand(s) caught between power steering gear and any part of MK48 during installation; serious injury to hand(s) could result.

CAUTION

Be very careful not to over tighten fittings and check valves using O-ring seals. Over tightening will result in damage to O-ring and could cause hydraulic fluid leakage.

NOTE

Install related hydraulic lines, hoses, nylon ties, and clamps as noted before removal.

Help from assistant may be needed to guide power steering gear into its proper position.

a. Place power steering gear (3, Figure 2-176) on ground under vehicle.

b. Using an overhead lifting device and help from assistant, carefully raise power steering gear (3) and guide it into its mounting position on frame (7).

c. Install eight capscrews (5) in power steering gear (3). Tighten capscrews (5) snugly.

d. Remove lifting device and sling from power steering gear (3).

e. Torque eight capscrews (5) to 110-120 ft-lb (149-163 N.m).

f. Secure capscrews (1, Figure 2-212), in groups of two, with lock wire (2).

2-314. PITMAN ARM

a. Align timing marks on steering gear output shaft (6, Figure 2-175) and pitman arm (5). Move pitman arm (5) on notch clockwise as shown.

b. Start pitman arm (5) on steering gear output shaft (6).

c. Install pitman arm (5) on steering gear output shaft (6) using 1-7/8 inch socket (7), washer (8), and installing capscrew (9). Installing capscrew (9) should be long enough (4-1/4 to 4-1/2 inches, 108 to 114 mm) to draw pitman arm (5) on steering gear output shaft (6).

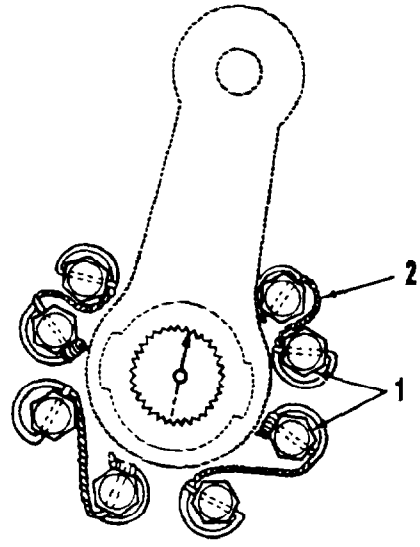

1. Capscrew (8)
2. Lock Wire

Figure 2-212. Power Steering Gear Mounting Bolt Torque Sequence

NOTE

The output shaft must not extend beyond pitman arm more than 3/64 inch (1.19 mm). After torquing, it may recess slightly.

d. Torque installing capscrew (9) to 85 ft-lb (115.26 N.m).

e. Remove installing capscrew (9), washer (8), and socket (7) from pitman arm (5).

f. Coat threads of locking setscrews (4), and capscrew (1) with anti-seize compound conforming to MIL-A-907.

g. Install capscrew (1), new lockwasher (2), and washer (3). Torque capscrew (1) to 65 ft-lb (88 N.m).

h. Install two locking setscrews (4) in pitman arm (5). Torque locking setscrews (4) to 10-12 ft-lb (13.6-16.27 N.m).

2-315. STEERING SHAFT - FRAME 90° GEAR BOX TO POWER STEERING GEAR

NOTE

Frame 90° gear box is not shown in Figure 2-174. However, steering shaft assembly (6) is installed on frame 90° gear box in the same manner as it is installed on the power steering gear.

a. Slide splined yoke (3, Figure 2-174) on input shaft (5) of power steering gear (4).

b. Secure splined yoke (3) to steering gear (4) with clamping capscrew (1) and new locknut (2). Torque locknut (2) to 35-40 ft-lb (45-54 N·m).

2-316. REAR AIR MANIFOLD

NOTE

Install related air lines, nylon ties, and clamps as noted before removal.

To prevent leakage, coat threads of all fittings and plug with Pipe Sealant, Loctite 592 or equivalent.

To prevent pipe sealant from entering air system, do not apply to first thread.

a. Install plug (11, Figure 2-173) in rear air manifold (5). Tighten plug (11) securely.

b. Install three reducers (16) in rear air manifold (5). Tighten reducers (16) securely.

c. Install four 90° elbows (12 through 15) in rear air manifold (5).

d. Install rear air manifold (5) on mounting plate (10) using two capscrews (9) and new locknuts (6). Tighten locknuts (6) securely.

NOTE

The air lines and connections may be checked after the entire air system is completely assembled. This will be done by pressurizing the air system to a point equivalent to normal operating air pressure and applying a water and soap solution to lines, fittings, and connections to check for leaks. A soft-bristled brush may be needed to apply the solution. Use soap NSN 8520-00-634-0335 or equivalent.

Fittings and air lines are allowed a one inch bubble in three seconds.

e. Connect four air lines (1 through 4) to 90° elbows (13, 14, 15, and 12) respectively. Tighten air lines (1 through 4) securely.

2-317. CHECK VALVES

NOTE

Install related air lines, nylon ties, and clamps as noted before removal.

To prevent leakage, coat threads of all fittings and plugs with Pipe Sealant, Loctite 592 or equivalent.

To prevent pipe sealant from entering air system, do not apply to first thread.

a. Install two check valves (10, Figure 2-172) on nipple (20) as shown.

b. Install check valves (10) on mounting bracket (11) using capscrew (9), new lockwasher (8), and nut (7). Tighten nut (7) securely.

c. Install three 90° elbows (16, 17, and 18) in check valves (10) as noted before removal.

d. Install straight fitting (19) in check valve (10) as shown. Tighten straight fitting (19) securely.

NOTE

The air lines and connections may be checked after the entire air system is completely assembled. This will be done by pressurizing the air system, to a point equivalent to normal operating air pressure, and applying a water and soap solution to lines, fittings, and connections to check for leaks. A soft-bristled brush may be needed to apply the solution. Use soap NSN 8520-00-634-0335 or equivalent.

Fittings and air lines are allowed a one inch bubble in three seconds.

e. Connect four air lines (12, 13, 14, and 15) to 90° elbows (16, 17, and 18) and straight fitting (19) respectively. Tighten air lines (12, 13, 14, and 15) securely.

2-318. RELAY VALVES

NOTE

Install related air lines, nylon ties, and clamps as noted before removal.

To prevent leakage, coat threads of all fittings and plugs with Pipe Sealant, Loctite 592 or equivalent.

NOTE

To prevent pipe sealant from entering air system, do not apply to first thread.

This procedure works for both relay valves.

a. Install plug (12, Figure 2-271) and elbow (11) in bottom of relay valve (2).

NOTE

Perform steps a.1 through a.4 on LVSA1 series vehicles only.

a.1. Install tee (10.6), elbow (10.7), and two connectors (10.8) on street tee (10.5).

a.2. Install tee (10.6), elbow (10.7), two connectors (10.8) and street tee (10.5) on front relay valve (10.9).

a.3. Install tee (10.2) and elbow (10.3) on double check valve (10.1).

a.4. Install tee (10.2), elbow (10.3), and double check valve (10.1) on top of rear relay valve (10.4).

b. Install tee fitting (10) in top of relay valve (2).

c. Install 90° elbow (9) in side of relay valve (2).

d. Install relay valve (2) on mounting bracket (16) using two capscrews (8) and new locknuts (5). Tighten locknuts (5) securely.

NOTE

The air lines and connections may be checked after the entire air system is completely assembled. This will be done by pressurizing the air system, to a point equivalent to normal operating air pressure and applying a water and soap solution to lines, fittings, and connections to check for leaks. A soft-bristled brush may be needed to apply solution. Use soap NSN 8520-00-634-0335 or equivalent.

Fittings and air lines are allowed a one inch bubble in three seconds.

Exhaust valve on bottom is allowed a one inch bubble in three seconds.

The top cover is allowed no leakage.

e. Connect two air lines (4) to tee fitting (10) on top of relay valve (2). Tighten air lines (4) securely.

f. Connect air line (3) to elbow (11) on bottom of relay valve (2). Tighten air line (3) securely.

g. Connect air line (1) to 90° elbow (9) on side of relay valve (2). Tighten air line (1) securely.

2-319. BALL VALVE

NOTE

Install related air lines, nylon ties, and clamps as noted before removal.

To prevent leakage, coat threads of all fittings and plugs with Pipe Sealant, Loctite 592 or equivalent.

NOTE

To prevent pipe sealant from entering air system, do not apply to first thread.

a. Install anchor stud (5, Figure 2-170) in mounting bracket (10) using new star washer (8) and nut (7). Tighten nut (7) securely.

b. Install 90° elbow (6) in anchor stud (5). Position 90° elbow (6) as noted before removal.

c. Connect air line (1) to 90° elbow (6). Tighten air line (1) securely.

d. Install ball valve (4) in anchor stud (5) with handle (9) facing up.

e. Install 90° elbow (3) in ball valve (4) as noted before removal.

NOTE

The air lines and connections may be checked after the entire air system is completely assembled. This will be done by pressurizing the air system, to a point equivalent to normal operating air pressure and applying a water and soap solution to lines, fittings, and connections to check for leaks. A soft-bristled brush may be needed to apply solution. Use soap NSN 8520-00-634-0335 or equivalent.

Fittings and air lines are allowed a one inch bubble in three seconds.

f. Connect air line (2) to 90° elbow (3). tighten air line (2) securely.

2-320. GLAD HANDS

NOTE

Install related air lines, nylon ties, and clamps as noted before removal.

To prevent leakage, coat threads of all fittings and plugs with Pipe Sealant, Loctite 592 or equivalent.

To prevent pipe sealant from entering air system, do not apply to first thread.

a. Install anchor stud (5, Figure 2-169) in glad hand (2) with short side of anchor stud (5) facing glad hand (2). Tighten anchor stud (5) securely.

b. Install glad hand (2) and anchor stud (5) in bracket (8).

c. Install new star washer (7) and nut (6) on anchor stud (5). Position glad hand (2) with opening facing down and tighten nut (6) securely.

d. Install 90° elbow (4) in anchor stud (5) as noted before removal.

NOTE

Perform step d.1 on LVSA1 series vehicles only.

d.1. Install glad hand mounting bracket (11) onto front engine mount (12) using two capscrews (9) and nuts (10).

NOTE

The air lines and connections may be checked after the entire air system is completely assembled. This will be done by pressurizing the air system, to a point equivalent to normal operating air pressure and applying a water and soap solution to lines, fittings, and connections to check for leaks. A soft-bristled brush may be needed to apply solution. Use soap NSN 8520-00-634-0335 or equivalent.

Fittings and air lines are allowed a one inch bubble in three seconds.

e. Connect air line (3) to 90° elbow (4). Tighten air line (3) securely.

2-321. FRONT AIR MANIFOLD

NOTE

Install related air lines, nylon ties, and clamps as noted before removal.

To prevent leakage, coat threads of all fittings and plugs with Pipe Sealant, Loctite 592 or equivalent.

To prevent pipe sealant from entering air system, do not apply to first thread.

a. Deleted.

b. Install 90° elbow (22, Figure 2-168) in manifold (15).

c. Place wrench on small nut (21) of check valve (20) and install check valve (20) in 90° elbow (22). Tighten check valve (2) securely.

d. Install 90° elbow (19) in check valve (20) as noted before removal.

e. Install three 90° elbows (16, 17, and 18) in front air manifold (15) as noted before removal.

f. Place wrench on small nut (14) of check valve (13) and install check valve (13) in front air manifold (15). Tighten check valve (13) securely.

g. Deleted.

h. Install front air manifold (15) on frame (11) using two capscrews (10), spacers (8), and new locknuts (6). Tighten locknuts (6) securely.

NOTE

The air lines and connections may be checked after the entire air system is completely assembled. This will be done by pressurizing the air system, to a point equivalent to normal operating air pressure and applying a water and soap solution to lines, fittings, and connections to check for leaks. A soft-bristled brush may be needed to apply solution. Use soap NSN 8520-00-634-0335 or equivalent.

Fittings and air lines are allowed a one inch bubble in three seconds.

i. Install five air lines (1 through 5) on 90° elbows (19, 16, 17, and 18) and check valve (13) respectively. Tighten air lines (1 through 5) securely.

2-322. STEERING RELIEF VALVE

CAUTION

Be very careful not to over tighten fittings and check valves using O-ring seals. Over tightening will result in damage to O-ring and could cause fluid leakage.

NOTE

Install related hydraulic lines, hoses, nylon ties, and clamps as noted before removal.

Lubricate all O-rings with clean oil conforming to MIL-L-2104 during assembly.

a. Install pressure check fitting (18, Figure 2-167) with protective cap (19) and new O-ring (20) in steering relief valve (8). Tighten pressure check fitting (18) securely.

b. Install tee fitting (16) with new O-ring (17) in steering relief valve (8) as noted before removal.

c. Install 45° elbow (14) with new O-ring (15) in steering relief valve (8) as noted before removal.

d. Install 90° elbow (12) with new O-ring (13) in steering relief valve (8) as noted before removal.

e. Install steering relief valve (8) on crossmember (11) using two capscrews (5), washers (9), plate (10), new lockwashers (7), and nuts (6). Tighten nuts (6) securely.

f. Connect four hydraulic lines (1, 2, 3, and 4) to one end of tee fitting (16), 45° elbow (14), 90° elbow (12), and other end of tee fitting (16) respectively. Tighten hydraulic lines (1, 2, 3, and 4) securely.

2-323. HYDRAULIC STEERING MANIFOLD

CAUTION

Be very careful not to over tighten fittings and check valves using O-ring seals. Over tightening will result in damage to O-ring and could cause fluid leakage.

NOTE

Install related hydraulic lines, hoses, nylon ties, and clamps as noted before removal.

a. Install 90° elbow (4, Figure 2-166) with new O-ring (7) in hydraulic steering manifold (13) as noted before removal.

b. Install straight fittings (5 and 6) with new O-rings (8 and 9) respectively in hydraulic steering manifold (13) as noted before removal. Tighten straight fittings (5 and 6) securely.

c. Install hydraulic steering manifold (13) on crossmember (14) using two capscrews (12), new lockwashers (11), and nuts (10). Tighten nuts (10) securely.

d. Connect three hydraulic lines (1, 2, and 3) to 90° elbow (4) and straight fittings (5 and 6) respectively. Tighten hydraulic lines (1, 2, and 3) securely.

2-324. DEMAND VALVE

WARNING

The demand valve is very heavy. To prevent personal injury, have assistant(s) help install demand valve on MK48.

NOTE

Install related hydraulic lines, hoses, nylon ties, and clamps as noted before removal.

a. Install demand valve (11, Figure 2-165) on mounting bracket (12) using three capscrews (8), new lockwashers (10), and nuts (9). Tighten nuts (9) securely.

b. Install new O-rings (13 through 16) in recess of hydraulic lines (1 through 4).

c. Install hydraulic line (4), as noted before removal, on demand valve (11) using two split flange brackets (7), four new lockwashers (6), and capscrews (5). Tighten capscrews (5) securely.

d. Repeat step c for remaining hydraulic lines (1, 2, and 3)

2-325. PRIORITY FLUID CONTROL VALVE

CAUTION

Be very careful not to over tighten fittings and check valves using O-ring seals. Over tightening will result in damage to O-ring and could cause fluid leakage.

NOTE

Install related hydraulic lines, hoses, nylon ties, and clamps as noted before removal.

a. Place priority fluid control valve (7, Figure 2-164) in a soft-jawed vise and install 90° elbow (13) with new O-ring (14) as noted before removal.

b. Install straight fitting (11) with new O-ring (12) in priority fluid control valve (7). Tighten straight fitting (11) securely.

c. Install straight fitting (9) with new O-ring (10) in priority fluid control valve (7). Tighten straight fitting (9) securely.

d. Remove priority fluid control valve (7) from vise.

e. Install priority fluid control valve (7) on crossmember (8) using two capscrews (4), new lockwashers (6), and nuts (5). Tighten nuts (5) securely.

f. Connect three hydraulic lines (1, 2, and 3) to straight fittings (9 and 11) and 90° elbow (13) respectively. Tighten hydraulic lines (1, 2, and 3) securely.

2-326. QUICK BUILDUP AIR RESERVOIR

NOTE

Install related air lines, nylon ties, and clamps as noted before removal.

To prevent leakage, coat threads of all fittings and plugs with Pipe Sealant, Loctite 592 or equivalent.

To prevent pipe sealant from entering air system, do not apply to first thread.

Right end of quick buildup air reservoir is the passenger side and left end is the driver side.

a. Install two 90° elbows (11 and 12, Figure 2-163) in top and left end respectively, of quick buildup air reservoir (7).

b. Install two reducers (17 and 19) in quick buildup air reservoir (7) as shown. Tighten reducers (17 and 19) securely.

c. Deleted.

d. Install tee fitting (14) in reducer (7). Tighten tee fitting (14) securely.

e. Install safety valve (13) in right end of tee fitting (14) and straight fitting (15) in left end of tee fitting (14). Tighten safety valve (13) and straight fitting (15) securely.

f. Install drain valve (18) in reducer (19). Tighten drain valve (18) securely.

g. Install mounting brackets (5) on frame mounting brackets (20) using four capscrews (10), new lockwashers (9), and nuts (8). Tighten nuts (8) securely.

CAUTION

To prevent parts damage, ensure hardware on top of quick buildup air reservoir clears all framework.

h. Spread mounting brackets (5) and install quick buildup air reservoir (7) with drain valve (18) facing down.

i. Support quick buildup air reservoir (7) and install two capscrews (6) through mounting brackets (5).

j. Install two new lockwashers (4) and nuts (3) on capscrews (6). Tighten nuts (3) securely.

NOTE

The air lines and connections may be checked after the entire air system is completely assembled. This will be done by pressurizing the air system, to a point equivalent to normal operating air pressure, and applying a water and soap solution to lines, fittings, and connections to check for leaks. A soft-bristled brush may be needed to apply the solution. Use soap NSN 8520-00-634-0335 or equivalent.

Fittings and air lines are allowed a one inch bubble in three seconds.

k. Install three air lines (1), as noted before removal, on 90° elbows (11 and 12) and straight fitting (15) respectively. Tighten air lines (1) securely.

l. Install pull chain (2) on drain valve (18).

2-327. PRESSURE PROTECTION VALVE

NOTE

Install related air lines, nylon ties, and clamps as noted before removal.

To prevent leakage, coat threads of all fittings and plugs with Pipe Sealant, Loctite 592 or equivalent.

To prevent pipe sealant from entering air system, do not apply to first thread.

Right end of quick buildup air reservoir is the passenger side and left end is the driver side.

a. Install adapter (3, Figure 2-162) in right end of quick buildup air reservoir (5). Tighten adapter (3) securely.

b. Install nipple (6) in adapter (3). Tighten nipple (6) securely.

c. Install 90° elbow (2) in pressure protection valve (4) as noted before removal.

d. Install pressure protection valve (4) on nipple (6) as noted before removal.

NOTE

The air lines and connections may be checked after the entire air system is completely assembled. This will be done by pressurizing the air system, to a point equivalent to normal operating air pressure, and applying a water and soap solution to lines, fittings, and connections to check for leaks. A soft-bristled brush may be needed to apply the solution. Use soap NSN 8520-00-634-0335 or equivalent.

Fittings and air lines are allowed a one inch bubble in three seconds.

e. Connect air line (1) to 90° elbow (2). Tighten air line (1) securely.

2-328. SPRING AND SEAT ASSEMBLY

WARNING

The spring and seat assembly is very heavy. To prevent personal injury, use an overhead lifting device to install spring and seat assembly.

a. Install bearing cups (10 and 11, Figure 2-208) in spring seat (12). Ensure bearing cups (10 and 11) are fully seated.

b. Pack bearing cone (9) with grease conforming to MIL-G-10924.

c. Install bearing cone (9) in spring seat (12).

NOTE

Seal lip must face toward bearing cone (9). Coat seal lip of oil seal (8) with a light coat of grease conforming to MIL-G-10924.

d. Install new oil seal (8) in spring seat (12).

e. Place leaf spring assembly (7) on spring seat (12) and set shoe (6) in proper position.

f. Install two clamps (5) with new lockwashers (4) and nuts (2). Tighten nuts (2) securely.

g. Install two washers (3) and capscrews (1). Tighten capscrews (1) securely.

h. Install spring and seat assembly (8, Figure 2-161) on skein (10), seal end first, using an overhead lifting device.

i. Pack bearing cone (9) with grease conforming to MIL-G-10924 and install bearing cone (9) on skein (10).

j. Install nut-locking (7) on skein (10). Torque nut-locking (7) to 175-225 ft-lb (237-305 N.m). Tighten nut-locking (7) as needed to install roll pins (6).

k. Install two new roll pins (6) in nut-locking (7).

l. Coat mating surface of cover (5) with silicone sealant conforming to MIL-A-46106.

m. Install cover (5) with six new lockwashers (4) and capscrews (3). Tighten capscrews (3) securely.

n. Torque capscrews (1) to 700 ft-lb (949.2 N.m).

o. Torque four nuts (2) to 600 ft-lb (813.6 N.m).

2-329. AXLE ASSEMBLY NO. 2

a. Brake Spider and Bracket

NOTE

If new brake spider (6, Figure 2-160) will be installed, position it as shown.

(1) Position brake spider (6) on axle housing (8) as marked before removal.

(2) Install two capscrews (7) through axle housing (8) and brake spider (6).

(3) Install six capscrews (7) through brake shoe side of brake spider (6) and axle housing (8).

(4) Install eight washers (5) and new locknuts (4) on capscrews (7). Torque locknuts (4) to 180 ft-lb (244 N.m).

(5) Install bracket (3) on brake spider (6).

(6) Install four washers (2) and capscrews (1) in bracket (3) and brake spider (6). Tighten capscrews (1) securely.

b. Camshaft and Slack Adjuster

CAUTION

Do not install old seals, bushings, C-clip, or cotter pin if removed. Replace with new parts.

(1) Install new bushings (10 and 11, Figure 2-159), if removed, in bracket (12).

(2) Install new seals (8 and 9) in bracket (12). Lip on seals (8 and 9) should be away from brake shoes.

(3) Coat camshaft (6) and bushings (10 and 11) with Lithium Grease, Lubriplate 5555 and install camshaft (6) in bracket (12).

(4) Install washer (7) and slack adjuster (3) on cam (6).

(5) Adjust camshaft (6) end play to within 0.005-0.045 inch (0.127-1.143 mm), by adding or removing shim(s) (5).

(6) Install new C-clip (4) on camshaft (6).

(7) Check camshaft (6) for free movement. Camshaft (6) must move freely.

(8) Lubricate camshaft (6) at lube fitting until grease comes out by slack adjuster (3) then lubricate slack adjuster (3). Use grease conforming to MIL-G-23549.

(9) Install pin (2) and new cotter pin (1) in slack adjuster (3).

c. Brake Shoes and Linings

CAUTION

If brake shoes and linings are being replaced on one end of axle, replace all shoes and linings on that axle. Mixing old and new brake shoes and linings will cause uneven braking.

Do not allow oil or grease to get on brake linings or drum. Braking capability will be greatly reduced.

To prevent brake failure, discard springs (6 and 7, Figure 2-158) if stretched, distorted, or show any wear on hook ends and install new springs (6 and 7).

(1) Install brake shoe and lining assembly (1) on anchor pin (9) and S-cam (3).

(2) Install two springs (7) on brake shoe (1).

(3) Install brake shoe and lining assembly (2) on other end of springs (7).

(4) Install spring (6) in brake shoe and lining assemblies (1 and 2).

(5) Carefully pry brake shoe and lining assemblies (1 and 2) away from S-cam (3) and install two rollers (4) and pins (5).

d. Hub and Drum Assembly and Wheel Bearings

NOTE

When installing wheel studs, be sure to use right hand threaded studs on right hub and drum and left hand threaded studs on left hub and drum.

(1) Install drum (11, Figure 2-157) on hub (8).

(2) Install ten studs (10) through drum (11) and hub (8).

(3) Drive studs (10) down until heads are flush with surface of drum (11).

(4) Install bearing cups (12 and 13), if removed, in hub (8).

CAUTION

To prevent damage to wheel bearings, pack wheel bearings with Grease, Aircraft, General Purpose, Wide Temperature Range, MIL-G-81322, NSN 9150-00-935-5851 or equivalent prior to installation.

(5) Install inner wheel bearing cone (7).

(6) Install new seal (6) in hub (8) using seal installation tool.

CAUTION

Do not damage oil seal when installing hub on skein.

(7) Deleted

(8) Install hub (8) and drum (11) over skein (16).

(9) Install outer bearing cone (4).

(10) Install inner nut (3) with machined surface against outer bearing cone (4). Do not tighten inner nut (3) at this time.

(11) Install eight studs (14), if removed, in hub (8).

(12) Slowly torque inner nut (3) to 250 ft-lb (340 N·m) while rotating drum (11) in forward and reverse directions.

(13) Loosen inner nut (3) until it turns by hand.

(14) Torque inner nut (3) to 50 ft-lb (68 N·m) while rotating drum (11) in forward and reverse directions.

(15) Back off inner nut (3) 1/8 turn.

(16) Install new nut lock (1) against inner nut (3).

(17) Install outer nut (2). Torque outer nut (2) to 250 ft-lb (340 N·m).

(18) Bend one tab of nut lock (1) over each nut (2 and 3) to secure in place. Drum (11) should move freely in both directions.

e. Axle Shaft

(1) Install new gasket (5, Figure 2-156) on hub (6).

(2) Install axle shaft (3) in axle housing.

(3) Install eight dowels (4), washers (2), and nuts (1) on studs (7).

(4) Torque nuts (1) to 90-120 ft-lb (127-162 N·m)

f. Brake Chamber

WARNING

Brake chamber contains a spring under great pressure. To prevent personal injury or death, never work directly behind brake chamber.

NOTE

Brake chambers have changed to a new style that has a crimped ring around the parking brake side of the chamber instead of a bolt together ring. When repairing a non-A1 vehicle, use the new style chamber to replace the old style chamber. Refer to TM 9-2320-297-24P for correct part identification.

(1) Install brake chamber (4, Figure 2-155) on bracket (13) so air fittings (8) point away from tire.

(2) Position studs (14) 1/8 inch (3.18 mm) from bottom of slots (15).

(3) Install two washers (12) and new locknuts (11). Tighten locknuts (11) to 100-115 ft-lbs (136-156 N·m).

NOTE

If brake chamber (4) is not caged, refer to Paragraph 2-32 steps a through d in this manual for caging procedures.

(4) Adjust clevis (6) to allow pin (10) to be installed easily.

(5) Install pin (10) in clevis (6) and install new cotter pin (9).

NOTE

Coat threads of air fittings (9) with pipe sealant, Loctite 592 or equivalent.

The air lines and connections may be checked after the entire air system is completely assembled. This will be done by pressurizing the air system, to a point equivalent to normal operating air pressure, and applying a water and soap solution to lines, fittings, and connections to check for leaks. A soft-bristled brush may be needed to apply the solution. Use soap NSN 8520-00-634–0335 or equivalent.

Fittings and air lines are allowed a one inch bubble in three seconds.

(6) Install two air lines (7) and air fittings (8) in brake chamber (4). Tighten air fittings (8) securely.

(7) Uncage spring by slowly unscrewing nut (2).

(8) Remove nut (2) and washer (3) from caging bolt (1).

NOTE

Nut side of caging bolt (1) must face away from tire.

(9) Remove caging bolt (1) and install it in holder on side of air chamber (4).

(10) Install washer (3) and nut (2) on caging bolt (1). Tighten nut (2) securely.

(11) Install dust cap (5) in caging bolt hole in brake chamber (4).

g. Axle Assembly No. 2

WARNING

Axle assembly no. 2 is very heavy and difficult to handle. To prevent personal injury, be very careful when installing axle assembly no. 2.

(1) Place axle assembly no. 2 (19, Figure 2-154, Sheet 2 of 2) on differential jack (18) using an overhead lifting device.

(2) Position axle assembly no. 2 (19) under MK48 just rearward of springs (20).

(3) Raise axle assembly no. 2 (19) until even with springs (20).

(4) Move axle assembly no. 2 (19) toward front of MK48 and on springs (20).

(5) Place two jack stands (17) under axle assembly no. 2 (19) to provide support until torque rods are installed. Refer to paragraph 2-331 in this manual for torque rod installation.

(6) Remove nut (12, Figure 2-154, Sheet 1 of 2) and lockwasher (13) from axle housing stud (16).

(7) Install bracket (14), new lockwasher (13), and nut (12) on axle housing stud (16) and axle housing (15). Tighten nut (12) securely.

(8) Connect air line (10) to axle shift unit (11). Tighten air line (10) securely.

(9) Connect two air lines (7 and 8) to right brake chamber (9).

(10) Connect two air lines (4 and 5) to left brake chamber (6).

(11) Install spacer (3), two clevis halves (2), and dowel pin (1).

2-330. AXLE ASSEMBLY NO. 1

a. Axle Ball Socket and Trunnion Bearings. Refer to TM 2320-34/13 for installation of axle ball socket and trunnion bearings.

b. Axle Ball Socket Wiper Seal and Tie Rod

(1) Axle Ball Socket Wiper Seal

NOTE

Ensure that groove in axle ball socket wiper seal (2, Figure 2-153) faces toward axle ball socket housing (17).

(a) Install new axle ball socket wiper seal (21) over axle ball (13).

(b) Install two retainer halves (20) with six new lockwashers (19) and capscrews (18) coated with silicone sealant conforming to NSN 8030-01-137-6964. Torque capscrews (18) to 25 ft-lb (34 N·m).

(c) Install steering stop screw (16) and nut (15) in axle ball socket housing (17). Preset length of capscrew (16) to 2.30 inches (5.9 cm).

(d) Coat mating surface of axle ball socket assembly (10) with silicone sealant conforming to NSN 8030-01-137-6964.

(d.1) Apply adhesive to holes in axle housing (14).

WARNING

The axle ball socket assembly is very heavy. To prevent personal injury, ensure axle ball socket assembly is securely positioned on transmission jack before installation.

(e) Install axle ball socket assembly (10) on studs (8) of axle housing (14).

(f) Install six washers (12) and capscrews (11) in top holes of axle housing (14). Tighten capscrews (11) snugly.

(g) Remove transmission jack (9) from axle ball socket assembly (10).

(h) Install four washers (7) and nuts (6) on studs (8).

(i) Torque six capscrews (11) and four nuts (6) to 160 ft-lb (217 N·m) using torque pattern (22).

(j) Torque six capscrews (11) and four nuts (6) to 320 ft-lb (434 N·m) using torque pattern (22).

(2) Tie Rod

NOTE

Ensure that right hand threaded tie rod end is on right side of MK48.

(a) Install tie rod end (3, Figure 2-153) in tie rod arm (4).

(b) Install castellated nut (2) on tie rod end (3).

(c) Torque castellated nut (2) to 125 ft-lb (169.5 N·m) then continue to tighten until new cotter pin (1) can be inserted.

(d) Repeat steps a through c above for other end of tie rod (5).

c. Axle Shaft Assembly

WARNING

The axle shaft assembly is very heavy. To prevent personal injury, have assistant help install axle shaft in axle ball socket assembly.

(1) Polish end of splines (4, Figure 2-152) to eliminate all nicks and burrs.

(2) Pack inner walls of axle ball socket assembly (2) with grease conforming to MIL-G-23549. Leave hole of axle shaft assembly (1) to clear.

(3) Coat all polished surfaces of axle shaft assembly (1) with grease conforming to MIL-G-23549 and install axle shaft assembly (1) through oil seal (3). Be very careful not to damage oil seal (3) before installation.

(4) Use excess grease to cover cage ring (5).

d. Skein and Brake Spider

(1) Skein

(a) Coat back of skein (9, Figure 2-151) with sealant confirming to NSN 8030-01-137-6964 and install skein (9) on studs (3).

CAUTION

Use at least three washers (12) for each stud (3) for seating of skein (9). Less than three washers could result in stripping threads on studs (3).

(b) Seat skein (9) against axle ball socket assembly (13). Use three washers (12) and nut (14) on each of three evenly spaced studs (3). Tighten nuts (14) alternately until skein (9) is fully seated.

(c) Remove three nuts (14) and nine washers (12) from studs (3).

(2) Brake Spider

(a) Coat back of brake spider (7) with sealant confirming to NSN 8030-01-137-6964 and install brake spider (7) on studs (3).

(a.1) Apply silicone sealant to ends of studs (3).

(b) Install bracket (6), two washers (5), and capscrews (4) on brake spider (7). Torque to 180 ft-lb (244 N·m).

(c) Install 12 washers (2) and new locknuts (1) on studs (3). Torque locknuts (1) and capscrews (4) to 125 ft-lb (168.75 N·m).

e. Plunger Assemblies (Actuating and Anchor)

(1) Coat inside of anchor plunger housing (19, Figure 2-150) with aircraft grease.

NOTE

Left and right anchor plungers may be marked "L" and "R". Install left and right anchor plungers in positions as noted before removal.

Ensure that slots (22) in left and right anchor plungers (17 and 18) line up with capscrew holes (21) in anchor plunger housing (19).

(2) Install left and right anchor plungers (17 and 18) in anchor plunger housing (19).

(3) Install two locking plates (15) on capscrews (16).

(4) Install two capscrews (16) with locking plates (15) in anchor plunger housing (19). Tighten capscrews (16) securely.

(5) Bend tabs on locking plates (15) to lock capscrews (16) in place.

(6) Check left and right anchor plungers (17 and 18) for 1 inch (2.54 mm) free movement in and out.

(7) Coat inside of actuating plunger housing (2) with aircraft grease.

(8) Apply aircraft grease to two actuating plungers (14) and install actuating plunger housing (2).

NOTE

Ensure that slots (22) in actuating plungers (14) line up with capscrew holes (23) in actuating plunger housing (2).

Ensure adjusting pawls (6) and springs (5) in actuating plunger housing (2).

(9) Install two adjusting pawls (6) and springs (5) in actuating plunger housing (2).

(10) Apply aircraft grease to rubber of two plunger seals (11).

NOTE

Ensure grooved side of plunger seals (11) faces head of adjusting bolts (10).

(11) Install new seal (11) on each adjusting bolt (10).

(12) Coat threads of adjusting bolts (10) with aircraft grease and install in adjusting sleeves (12).

(13) Turn adjusting bolts (10) in until just short of bottoming on plunger seal (11).

(14) Install two snaprings (13) on adjusting bolts (10).

(15) Apply aircraft grease to outside of adjusting sleeves (12) and install actuating plunger housing (2).

(16) Carefully install seals (11) in actuating plunger housing (2).

(17) Install two locking plates (3) on capscrews (4).

(18) Install two capscrews (4) in capscrew holes (23).

(19) Bend up tab on each locking plate (3) to secure capscrew (4) in place.

NOTE

Ensure both plungers seals (11) are fully seated in actuating plunger housing (2).

(20) Install two detent washers (8), retainers (7), and snaprings (9) on adjusting bolts (10).

(21) Apply aircraft grease to springs and actuating rollers of wedge assembly (1). Install wedge assembly (1) in actuating plunger housing (2).

(22) Check plunger engagement by pushing on wedge shaft (24) and watching retainer (7) movement.

f. Brake Chamber

NOTE

Ensure wedge assembly (5, Figure 2-149) is seated properly in actuating plunger housing (6). Refer to paragraph above for proper seating of wedge assembly.

(1) Install collet nut (4) on brake chamber (2).

(2) Apply nonhardening sealer, Permatex No. 2 or equivalent, to first three threads on brake chamber (2).

(3) Thread brake chamber (2) in plunger housing (6) until it bottoms.

(4) Turn brake chamber (2) out no more than one turn, to place air port in top position.

(5) Coat threads of air fittings (3) and (3.1) with Pipe Sealant, Loctite 592 or equivalent.

NOTE

The air lines and connections may be checked after the entire air system is completely assembled. This will be done by pressurizing the air system, to a point equivalent to normal operating air pressure, and applying a water and soap solution to lines, fittings, and connections to check for leaks. A soft-bristled brush may be needed to apply the solution. Use soap NSN 8520-00-634-0335 or equivalent.

NOTE

Fittings and air lines are allowed a one inch bubble in three seconds.

Air line (1.1) and fitting (3.1) are present on LVSA1 series vehicles only.

(6) Install fittings (3) and (3.1) and air lines (1) and (1.1). Tighten fittings (3) and (3.1) securely.

(7) After air system and brakes have been completely assembled, have assistant make and hold a full brake application. Tighten collet nut (4) by hand until tight. Using a punch and hammer, continue to tighten collet nut (4) 1-1/2 teeth more. Have assistant release brakes.

g. Brake Shoes and Linings

CAUTION

If brake shoes and linings are being replaced on one end of axle, replace all brake shoes and linings on that axle. Mixing old and new brake shoes and lining will cause uneven braking.

LVS brake shoes on trucks with serial number 37141 and above will have asbestos and nonasbestos brake linings. When replacing brake linings on axle, ensure all replacement linings on both ends of axle are all asbestos or all nonasbestos. Mixing different types of linings will cause uneven braking.

Do not allow oil or grease to get on brake linings or drum. Braking capability will be greatly reduced.

NOTE

Do not reuse springs or cotter pins. Always replace with new parts.

(1) Turn two adjusting bolts (6, Figure 2-148) all the way in.

(2) Install one brake shoe and lining assembly (9) on top of adjusting bolt (6) and anchor assembly (12).

NOTE

Ensure screw (10) comes through triangle opening in brake shoe and lining assembly (9).

(3) Install screw (10), from the axle housing side, through brake spider (14) and triangle opening (13) in brake shoe and lining assembly (9).

(4) Install retainer plate (5), new spring (4), washer (3), and nut (2) on screw (10). Do not tighten nut (1).

NOTE

Ensure upper return spring (7) sits in bracket (8).

(5) Install upper return spring (7) at top of brake shoe and lining assembly (9).

(6) Install lower return spring (11) at bottom of same brake shoe and lining assembly (9).

(7) Install remaining brake shoe and lining assembly (9) on bottom side of adjusting bolt (6) and anchor assembly (12).

(8) Connect upper and lower return springs (7 and 11) to brake shoe and lining assembly (9) on bottom side of adjusting bolt (6) and anchor assembly (12).

(9) Repeat steps (3 and 4) for bottom brake shoe and lining assembly.

(10) Tighten both nuts (2) until hole for cotter pin is visible.

(11) Install two new cotter pins (1) in nut (2) and screw (10). Bend down ends of cotter pins (1) to secure them in place.

h. Hub and Drum Assembly and Wheel Bearings

(1) Install ten wheel lug studs (17, Figure 2-147) in holes in hub (6).

(2) Drive wheel lug studs (17) down until flush with hub (6).

(3) Install bearing cups (15 and 16) in hub (6). Ensure bearing cups (15 and 16) are fully seated in hub (6).

(4) Pack the wall of hub (6) with grease conforming to MIL-G-23549.

(5) Pack wheel bearing cones (11 and 14) with grease conforming to MIL-G-23549.

(6) Install wheel bearing cone (14) in hub (6).

(7) Install seal spacer (13) in hub (6) with inner chamfer facing out.

(8) Install oil seal (12) in hub (6) with lip of oil seal (12) facing in and flush with face of hub (6).

(9) Coat lip of oil seal (12) with grease conforming to MIL-G-23549.

CAUTION

Do not damage oil seal when installing hub on skein.

(10) Slide hub (6) over skein (21).

(11) Install wheel bearing cone (11) on skein (21).

(12) Remove excess grease from threads of skein (21).

(13) Install wheel bearing nut (9) on skein (21).

CAUTION

Adjustment of wheel bearing nut (9) is very important. It must be tight enough to eliminate end play in hub, but not tight enough to cause excessive drag.

(14) Rotate hub (6) while tightening wheel bearing nut (9).

(15) Tighten wheel bearing nut (9) until hub (6) is tight. Then loosen wheel bearing nut (9) 1/4 turn.

(16) Align slot (23) in wheel bearing nut (9) with slot (22) in skein (21).

(17) Install lock plate (10) in slots (22 and 23).

(18) Install new lockwasher (8) and capscrew (7) in wheel bearing nut (9). Torque capscrew (7) to 25 ft-lb (33.9 N.m).

(19) Pack inside of hub cap (4) with 1/2 inch of grease conforming to MIL-G-23549.

(20) Coat hub sealing surface with sealant conforming to MIL-S-46163.

(21) Install hub cap (4) on hub (6) by tapping it on studs (20) using a brass drift and a hammer.

(22) Install ten new lockwashers (3) and nuts (2) on studs (20). Torque nuts (2) to 130 ft-lb (180 N.m).

WARNING

The brake drum is very heavy. To prevent personal injury, have assistant(s) help install brake drum on hub.

(23) Install brake drum (19) on hub (6) with help from an assistant(s).

i. Axle Assembly No. 1

WARNING

Axle assembly no. 1 is very awkward to handle due to the weight of the nose box which causes axle assembly no. 1 to be extremely front-heavy. Use a differential jack that will support the nose box on axle assembly no. 1 and prevent it from falling forward before installation procedures. To prevent possible serious injury to personnel and damage to equipment, be extremely careful when installing axle assembly no. 1.

Axle assembly no. 1 is heavier on left side. To prevent personal injury or possible damage to equipment, axle assembly no. 1 must be chained to differential jack to be properly supported and balanced.

CAUTION

To prevent pipe sealant from entering air system, do not apply to first thread of fittings.

NOTE

Install related air lines, nylon ties, and clamps as noted before removal.

To prevent leakage, coat threads of all fittings and plugs with Pipe Sealant, Loctite 592 or equivalent.

(1) Place axle assembly no. 1 (18, Figure 2-146, Sheet 2 of 2) on differential jack (21) and secure with a chain.

(2) Position axle assembly no. 1 (18) under MK48 just forward of springs (17).

(3) Raise axle assembly no. 1 (18) until spring mounts (24) are even with end of springs (17).

(4) Move axle assembly no. 1 (18) towards rear of MK48 until axle assembly no. 1 (18) is on springs (17).

(5) Install two jack stands under axle assembly no. 1 (18) to provide support while torque rods are being installed.

(6) Install upper torque rod. Refer to Paragraph 2-331 in this manual.

(7) Install lower torque rods. Refer to Paragraph 2-331 in this manual.

(8) Connect air line (19) to axle shift unit (20). Tighten air line (19) securely.

(9) Install drag link (14, Figure 2-146, Sheet 1 of 2) in steering arm (15).

(10) Install castellated nut (13) and torque to 185-200 ft-lb (250-271 N.m).

(11) Install new cotter pin (12) in drag link (14). Bend ends of cotter pin (12) down to secure it in place.

(12) Connect air line (10) to 90° elbow (11). Tighten air line (11) securely.

(13) Install two clamps (9), washers (8), capscrew (7), new lockwashers (6), and nut (5). Tighten nut (5) securely.

(14) Install clevis halves (2) through limiting chains (3) and axle assembly no. 1 (18).

(15) Install spacers (4) and dowel pins (1) in clevis halves (2).

2-331. TORQUE RODS

WARNING

The torque rods are heavy. To prevent personal injury, have assistant(s) help when installing torque rods.

NOTE

Left and right lower torque rods are installed in same manner.

a. Lower Torque Rods

(1) Install lower rear torque rod (45, Figure 2-145, Sheet 2 of 2) on suspension bracket (31) using two capscrews (46), washers (47), and hardened washer(s) (48). Hand tighten capscrews (46).

(2) Install lower rear torque rod (45) on axle housing no. 2 (26) using two capscrews (42) four washers (41 and 43), hardened washer(s) (44), and two new locknuts (40).

(3) Torque locknuts (40) to 170 ft-lb (230.5 N.m).

(4) Torque capscrews (46) to 212 ft-lb (287.47 N.m).

(5) Repeat steps (1 through 4) for opposite lower rear torque rod (45).

(6) Install lower front torque rod (36) on suspension bracket (31) using two capscrews (37), washers (38), and hardened washer(s) (39). Hand tighten capscrews (37).

(7) Install lower front torque rod (36) on axle housing no. 1 (10) using two capscrews (34), four washers (33 and 35) and two new locknuts (32).

(8) Torque locknuts (32) to 170 ft-lb (230.5 N.m).

(9) Torque capscrews (37) to 212 ft-lb (287.47 N.m).

(10) Repeat steps (6 through 9) for opposite lower front torque rod (36).

b. Upper Torque Rods

(1) Install upper rear torque rod (20, Figure 2-145, Sheet 1 of 2) on suspension bracket (31) using two capscrews (29), four washers (30 and 28), and two new locknuts (27). Hand tighten capscrews (27).

(2) Install upper rear torque rod (20) on axle housing no. 2 (26) using two capscrews (23) four washers (24 and 22), hardened washer(s) (25), and two new locknuts (21).

(3) Torque locknuts (21 and 27) to 170 ft-lb (230.5 N.m).

(4) Install two clamps (19) on upper rear torque rod (20) using capscrew (18), two washers (17) and nut (16). Tighten nut (16) securely.

(5) Install upper front torque rod (5) on suspension bracket (15) using two capscrews (13), four washers (12 and 14), and two new locknuts (11). Hand tighten capscrews (13).

(6) Install upper front torque rod (5) on axle housing no. 1 (10) using two capscrews (8), four washers (7 and 9) and two new locknuts (6).

(8) Torque locknuts (6 and 11) to 170 ft-lb (230.5 N.m).

(9) Install two clamps (4) on upper front torque rod (5) using capscrew (3), two washers (2) and nut (1). Tighten nut (1) securely.

2-332. SHOCK ABSORBERS AND BUSHINGS

a. Install two inner retainers (6, Figure 2-144) on mounting brackets (5) with small end toward rubber bushing (7).

b. Install four new rubber bushings (7) in shock absorber (4).

c. Install shock absorber (4) on mounting brackets (5).

d. Place two retainers (3) over rubber bushing (7) with small end toward rubber bushing (7).

e. Install two hardened washers (2) and new locknuts (1) on mounting brackets (5). Tighten locknuts (1) securely.

2-333. ARTICULATION JOINT. Refer to TM 2320-34/13 for reassembly and installation of articulation joint.

2-334. YAW STEERING CYLINDERS

WARNING

The yaw steering cylinders are very heavy. To prevent personal injury, use an overhead lifting device or help from assistant(s) to install yaw steering cylinders.

NOTE

Install related hydraulic lines, hoses, nylon ties, and clamps as noted before removal.

a. Instal four new bushings (11, Figure 2-143) in mounting brackets (13).

b. Install 90° elbow (10), plug (9), and nipple (8) in yaw steering cylinder (3).

NOTE

Perform step b.1 on LVSA1 series vehicles only.

b.1. Install elbow (10) and nipple (8) in yaw cylinder (3).

c. Extend yaw steering cylinder (3) to length needed for installation.

d. Install yaw steering cylinder (3) with main body towards front of MK48.

e. Secure yaw steering cylinder (3) with two yaw steering cylinder pins (7).

f. Install two washers (6) and castellated nuts (5) on yaw steering cylinder pins (7). Tighten castellated nuts (5) securely.

g. Install two new cotter pins (4) in castellated nuts (5) and yaw steering cylinder pins (7). Bend up ends of cotter pins (4) to secure them in place.

h. Connect hydraulic line (2) to 90° elbow (10). Tighten hydraulic line (2) securely.

i. Connect hydraulic line (1) to nipple (8). Tighten hydraulic line

j. Install two grease fittings (12) on yaw steering cylinder.

2-335. BELL CRANK

a. Install bell crank bracket (10, Figure 2-142) using six capscrews (17) and new locknuts (16). Tighten locknuts (16) securely.

b. Install grease fitting (15) in bell crank (9). Tighten grease fitting (15) securely.

NOTE

Ensure inner and outer bearing cups are fully seated in bell crank.

c. Install inner bearing cup (14) in bell crank (9).

d. Install outer bearing cup (13) in bell crank (9).

e. Pack inner and outer bearing cones (8 and 12) with grease conforming to MIL-G-23549.

f. Install inner bearing cone (12) in bell crank (9).

NOTE

Lip of seal (11) must face inner bearing cone (12).

g. Install new seal (11) in bell crank (9).

h. Slide inner bearing cone (12) and bell crank (9) on bell crank shaft (19).

i. Slide outer bearing cone (8) on bell crank shaft (19).

j. Align tang of torque washer (7) with slot on bell crank shaft (19).

k. Install torque washer (7) on bell crank shaft (19).

CAUTION

Adjustment of nut (6) is very important. It must be tight enough to eliminate end play, but not tight enough to cause binding.

l. Install nut (6) on bell crank shaft (19).

m. Tighten nut (6) until bell crank (9) movement becomes stiff. Then loosen nut (6) 1/3 turn.

n. Install lockwasher (4) and nut (5) on bell crank shaft (19).

o. Bend one or two tabs of lockwasher (4) over nuts (5 and 6).

p. Apply silicone sealant conforming to MIL-A-46106 to cover (3).

q. Install cover (3) using four new lockwashers (2) and capscrews (1). Tighten capscrews (1) securely.

2-336. YAW FEEDBACK LINKAGE

a. Secure yaw bell crank assembly (6, Figure 2-141) with four capscrews (10), washer (12) and four nuts (11) as noted before removal. Tighten nuts (11) securely.

b. Secure lever assembly (7) with four new lockwashers (9) and capscrews (8). Tighten capscrews (8) securely.

c. Install drag link (3) with left hand threaded socket assembly (4) at lever assembly (7).

d. Install right hand threaded socket assembly (5) at yaw bell crank assembly (6).

NOTE

After torquing castellated nuts (2), continue tightening them to align slots for cotter pins (1). Do not back off castellated nuts (2) to align cotter pin (1) holes.

e. Install two castellated nuts (2) on socket assemblies (4 and 5). Torque castellated nuts (2) to 17-25 ft-lb (23-34 N.m).

f. Install cotter pins (1) in castellated nuts (2) and socket assemblies (4 and 5). Bend up one end of cotter pins (1) to prevent them from coming out of castellated nuts (2) and socket assemblies (4 and 5).

2-337. YAW CONTROL VALVE

NOTE

Install related hydraulic lines, hoses, nylon ties, and clamps as noted before removal.

a. Install 90° elbow (13, Figure 2-140) in yaw control valve (5). Tighten 90° elbow (13) securely.

b. Install three straight fittings (10, 11, and 12) in yaw control valve (5). Tighten straight fittings (10, 11, and 12) securely.

c. Insert ball stud (7) through bell crank (9) from chassis side.

NOTE

After torquing castellated nut (8), continue tightening it to align slot for cotter pin (6). Do not back off castellated nut (8) to align cotter pin (6) slot.

d. Install castellated nut (8) on ball stud (7). Torque castellated nut (8) to 185-200 ft-lb (250-271 N.m).

e. Install new cotter pin (6) in castellated nut (8) and ball stud (7). Bend up one end of cotter pin (6) to secure it in place.

f. Connect hydraulic line (4) to straight fitting (11). Tighten hydraulic line (4) securely.

g. Connect hydraulic line (3) to straight fitting (12). Tighten hydraulic line (3) securely.

h. Connect hydraulic line (2) to straight fitting (10). Tighten hydraulic line (2) securely.

i. Connect hydraulic line (1) to 90° elbow (13). Tighten hydraulic line (1) securely.

2-338. FUSE LINK ASSEMBLY

NOTE

Initial adjustment is temporary. Steering must be properly adjusted as soon as possible. Tighten capscrew (10, Figure 2-139) and nut (11) securely after final adjustment is made.

Ensure flat side of threads on fuse link cover (9) align with locking capscrew (5).

a. Turn threads of fuse link cover (9) in yaw control valve (7) until tight.

b. Install locking capscrew (5) and new locknut (6) in yaw control valve (7). Tighten locknut (6) securely.

c. Turn socket assembly (2) in or out of shaft (13) so that socket assembly (2) can be installed in yaw bell crank (4). Do not disturb yaw bell crank (4). Torque nut (11) on clamp (12) to 55 ft-lb (75 N.m).

NOTE

After torquing castellated nut (3), continue tightening it to align slot for cotter pin (1). Do not back off castellated nut (3) to align cotter pin (1) slot.

d. Install castellated nut (3) on socket assembly (2). Torque castellated nut (3) to 17-25 ft-lb (23-34 N.m).

e. Install new cotter pin (1) in castellated nut (3) and socket assembly (2). Bend up one end of cotter pin (1) to secure it in place.

2-339. DRAG LINKS

a. Install socket assembly (5, Figure 2-138) of drag link assembly (6) in pitman arm (12).

b. Install socket assembly (4) of drag link assembly (6) in top hole of bell crank (13).

c. Secure socket assembly (4) with castellated nut (3). Torque castellated nut (3) to 110-125 ft-lb (149-170 N.m).

d. Secure socket assembly (5) with castellated nut (2). Torque castellated nut (2) to 90-100 ft-lb (122-135.6 N.m).

e. Install socket assembly (5) of drag link assembly (7) in steering arm (14).

NOTE

After torquing castellated nuts (2 and 3), continue tightening them to align slots for cotter pins (1). Do not back off castellated nuts (2 and 3) to align cotter pin (1) slots.

f. Install socket assembly (4) of drag link assembly (7) in bottom hole of bell crank (13).

g. Secure socket assemblies (4 and 5) with castellated nuts (2 and 3). Torque castellated nuts (2 and 3) to 110-125 ft-lb (149-170 N·m).

h. Turn clamp (10) for maximum clearance of truck chassis. Torque clamping capscrew (8) to 50-60 ft-lb (67.8-81.4 N·m).

i. Install new cotter pins (1) in socket assemblies (4 and 5) and castellated nuts (2 and 3). Bend up one end of cotter pins (1) to prevent them from coming out of castellated nuts (2 and 3) and socket assemblies (4 and 5).

2-340. TRANSFER CASE

WARNING

The transfer case is very heavy. To prevent personal injury, ensure eyebolt will support weight of transfer case.

To prevent personal injury or damage to equipment, have assistant(s) guide transfer case into position during installation procedures.

To prevent personal injury, direct personnel to stay clear of transfer case during installation procedures.

NOTE

Install related hydraulic lines, hoses, nylon ties, and clamps as noted before removal.

a. Install four rubber biscuits (38, Figure 2-137, Sheet 4 of 4) in frame brackets (39 and 40).

b. Attach lifting device (37) to eyebolt (34) on transfer case (4).

c. Raise transfer case (4) and position it in MK48 frame as noted before removal using an overhead lifting device.

d. Install four rubber biscuits (33), plates (32), washers (31), and capscrews (30) in transfer case (4).

e. Install four washers (29), castellated nuts (28), and cotter pins (27) on capscrews (30). Bend down ends of cotter pins (27) to secure them in place.

f. Remove lifting device (37) and eyebolt (34) from transfer case (4).

g. Remove two capscrews (2, Figure 2-137, Sheet 3 fo 4) from transfer case (4).

NOTE

Perform step g.1 on LVSA1 series vehicles only.

g.1 Remove two capscrews (25, Figure 2-137, Sheet 3 of 4) and washer (25.1) from transfer case (4).

h. Install bracket (26) on transfer case (4) using two capscrews (25) coated with silicone sealant conforming to MIL-A-46106. Tighten capscrews (25) securely.

NOTE

Perform step h.1 on LVSA1 series vehicles only.

h.1 Install bracket (26) on transfer case (4) using two washers (25.1) and capscrews (25) coated with silicone sealant conforming to MIL-A-46106. Tighten capscrews (25) securely.

i. Connect three front hydraulic lines (22, 23, and 24) to fittings in bracket (26) as noted before removal.

j. Install clamp (21, Figure 2-137, Sheet 2 of 4) on hydraulic lines as shown.

k. Install capscrew (20), washer (19), lockwasher (18), and nut (17) in clamp (21). Tighten nut (17) securely.

l. Remove capscrew (12), lockwasher (13), and fuel line clamp (14) from lubrication pump (15). Discard lockwasher (13).

m. Install fuel line clamp (14) on lubrication pump (15) using new lockwasher (13), and capscrew (12). Discard lockwasher (13).

n. Connect tow air lines (9 and 10, Figure 2-137, Sheet 1 of 4) to lockup air chamber (11) as noted before removal.

o. Remove pin (6) and old cotter pin (5) from bracket (8). Discard cotter pin (5).

p. Install transfer case lower restraint (7) in bracket (8).

q. Install pin (6) in bracket (8) and transfer case lower restraint (7).

r. Install new cotter pin (5) in pin (6). Spread ends of cotter pin (5) to secure it in place.

s. Install shift cable bracket (3) on transfer case (4), as noted before removal, using two new lockwashers (2) and capscrews (1). Tighten capscrews (1) securely.

3-341. PROPELLER SHAFTS AND UNIVERSAL JOINTS

a. Propeller Shafts with Yokes

WARNING

Propeller shafts and universal joints are very heavy. To prevent personal injury, be very careful when installing propeller shafts and universal joints. Use proper lifting equipment and an assistant to aid in handling propeller shafts and universal joints.

NOTE

For installation of propeller shafts using yokes, follow steps a(1) through a(5).

For installation of propeller shafts using companion flanges, follow steps b(1) through b(7).

(1) Place proper shaft (7, Figure 2-136) under MK48.

(2) Insert universal joint (5) in yoke (3) by tilting in place.

(3) Tap two bearing caps (4 and 6) in yoke (3) until flush with yoke (3).

(4) Install four self-locking capscrews (2.1) in yoke (3). Tighten self-locking capscrews (2.1) to 38-48 foot-pounds (52-65 N·m).

(5) Deleted

(6) Repeat steps a(2) through (4) on other end of propeller shaft (7).

b. Propeller Shafts with Companion Flanges

(1) Place propeller shaft (5, Figure 2-135) under MK48.

(2) Raise propeller shaft (5) into mounting position using lifting equipment or help from assistant(s).

(3) Support shaft (5) with rope as shown.

CAUTION

To avoid parts damage, ensure companion flanges (1) do not bind on articulation joint. Move single center support bearing (6) to prevent binding.

(4) Install two capscrews (7), new lockwashers (8), and nuts (9). Torque nuts (9) to 400 ft-lbs (542.4 N·m).

(5) Align matchmarks on companion flanges (1) made before removal.

(6) Install eight capscrews (4), new lockwashers (3), and nuts (2) in companion flanges (1). Tighten nuts (2) to 40-48 foot pounds (54-65 N·m).

(7) Install chain (10) using washer (11), capscrew (12), and new locknut (13). Tighten locknut (13) securely.

2-342. CARDAN JOINT

WARNING

The Cardan joint is very heavy. To prevent personal injury during installation, use a lifting device or help from assistant(s).

a. Install Cardan joint (4, Figure 2-134) on transfer case output yoke (9).

b. Install four capscrews (8) through universal joint cap (14) and transfer case output yoke (9) and install new lockwashers (7) and nuts (6) on capscrews (8). Tighten nuts (6) securely.

c. Slide slip yoke (5) to seat against universal joint (10).

d. Install four capscrews (3) through slip yoke (5) and universal joint (10) and install new lockwashers (2) and nuts (1) on capscrews (3). Tighten nuts (1) securely.

2-343. PILLOW BLOCK ASSEMBLY

WARNING

The pillow block assembly is very heavy. To prevent personal injury, use a lifting device or help from assistant(s) to install pillow block assembly.

a. Install four capscrews (15, Figure 2-133) and four washers (14) in vehicle, with threads facing down.

b. Place two pillow block spacers (16) on top of pillow block bearings (22 and 24). Have assistant hold pillow block spacers (16).

c. Install shaft assembly (12) and two pillow block spacers (16), with slip yoke (11) facing transfer case, using four washers (14) and new locknuts (13). Do not tighten locknuts (13) at this time.

d. Slide slip yoke (11) until seated.

e. Install four capscrews (10), new lockwasher (9), and nuts (8). Tighten nuts (8) securely.

f. Torque four locknuts (13) to 400 ft-lb (542 N.m).

g. Torque locknut (6) to 700-750 ft-lb (949-1017 N.m).

h. Align matchmarks on companion flanges (1 and 2) and install eight capscrews (5), new lockwashers (4), and nuts (3). Torque nuts (3) to 40-48 ft-lb (54.24-65 N.m).

2-344. FENDERS, TOOL STOWAGE BOX, AND WHEEL CHOCK RACK

WARNING

The fenders are heavy and awkward to handle. To prevent personal injury, use an overhead lifting device to install fenders on vehicle.

NOTE

This procedure works for both fenders.

a. Fenders

(1) Position fender supports (6 and 7, Figure 2-132) on fender brace (8).

(2) Install two capscrews (3) and new locknuts (1) in fender supports (6 and 7) and fender brace (8). Tighten locknuts (1) securely.

(3) Position right fender (4) on fender supports (6 and 7).

(4) Install two capscrews (3), washers (2), and new locknuts (1) in right and left fenders (4 and 5) and fender supports (6 and 7). Tighten capscrews (3) securely.

b. Tool Stowage Box

(1) Position tool stowage box (9, Figure 2-131) on right fender (10).

NOTE

Tool stowage box cover (9) will have to be open to access capscrews (7).

(2) Install four capscrews (7) and new locknuts (8) in tool stowage box (9) and right fender (10). Tighten locknuts (8) securely.

c. Wheel Chock Rack

NOTE

Run first four nuts (5.1) up on threads far enough to allow thread ends of wheel chock rack to protrude through fender.

(1) Install four nuts (5.1), washers (2), and angle bracket (4) on wheel chock rack (3).

(2) Position wheel chock rack (3) on left fender (5).

(3) Install four new locknuts (1) on wheel chock rack (3). Tighten locknuts (1) securely.

2-345. FENDER RUBBERS, SPLASH GUARDS, AND VEHICLE STEP

NOTE

This procedure works for both fender rubbers.

a. Fender Rubbers

(1) Position left fender rubber (11, Figure 2-130) under left fender (5).

(2) Install retainer strips (7, 8, and 10) on left fender rubber (11).

(3) Install 27 capscrews (9) and new locknuts (6) in retainer strips (7, 8, and 10) and fender rubber (11). Tighten locknuts (6) securely.

b. Splash Guards

NOTE

This procedure works for both splash guards.

(1) Position splash guard (4) on left fender (5).

(2) Install retainer strip (3) on splash guard (4) using three capscrews (2) and new locknuts (1). Tighten locknuts (1) securely.

c. Vehicle Step

(1) Install two supports (8, Figure 2-129) on vehicle step (5) using two capscrews (7) and new locknuts (6). Snug locknuts (6) at this time.

(2) Install vehicle step (5) and supports (8) on vehicle using two capscrews (4) and new locknuts (3). Tighten locknuts (3) securely.

(3) Install two capscrews (2) and new locknuts (1) in supports (8). Tighten locknuts (3) securely.

(4) Tighten locknuts (1 and 3) securely.

NOTE

Perform step (5) for LVSA1 series vehicles only.

(5) Install step (11) with two capscrews (10) and new locknuts (9). Tighten locknuts (9) as necessary to allow free movement of step (11).

2-346. POWER PACK. Refer to TM 2320-34/13 for power pack installation procedures.

2-347. COOLANT FILTER AND ADAPTER

NOTE

Apply Pipe Sealant Loctite 592 or equivalent, to all fittings and valves before installing.

Install valves (1 and 2, Figure 2-128) as noted before removal.

a. Install street elbow (15), valve (1) in coolant filter adapter (10).

b. Install valve (2) in coolant filter adapter (10).

c. Install coolant filter adapter (10) on bracket (9) using three capscrews (12) and nuts (13). Tighten nuts (13) securely.

d. Install coolant filter adapter (10) and bracket (9) on engine block (11) using two new lockwashers (8) and capscrews (7). Tighten capscrews (7) securely.

e. Install hoses (5 and 6) on valves (1 and 2) respectively.

f. Install hose clamps (4) on hoses (5 and 6). Torque hose clamps (4) to 40 inch-pounds (4.51 N·m).

CAUTION

To prevent damage to new coolant filter, do not over tighten it. Tighten coolant filter only by hand.

NOTE

Coat coolant filter seal (16) with clean oil conforming to MIL-L-46152.

g. Install new coolant filter (3) on coolant filter adapter (10) by turning coolant filter (3) in a clockwise direction until coolant filter seal (16) contacts coolant filter adapter (10). Then tighten coolant filter (3) 1/4 turn more.

h. Open valves (1 and 2) by turning handles in a counterclockwise direction.

2-348. FAN CONTROL RELIEF/UNLOAD VALVE

NOTE

Install related hydraulic lines, hoses, nylon ties, and clamps as noted before removal.

Install fittings and elbows as noted before removal.

a. Install 90° elbow (15, Figure 2-127) on fan control relief/unload valve (7) or (7.1).

b. Install nipples (12, 13, and 14) in fan control relief/unload valve (7) or (7.1).

c. Position fan control relief/unload valve (7) or (7.1) on mounting bracket (11).

d. Install two capscrews (8), new lockwashers (10), and nuts (9) in fan control relief/unload valve (7) or (7.1) and mounting bracket (11). Tighten nuts (9) securely.

e. Connect hydraulic line (6) to 90° elbow (15). Tighten hydraulic line (6) securely.

f. Connect three hydraulic lines (3, 4, and 5) to nipples (12, 13, and 14) respectively. Tighten hydraulic lines (3, 4, and 5) securely.

g. Connect plugs (1 and 2). Ensure plugs (1 and 2) are properly connected.

NOTE

Perform step g.1 on LVSA1 series vehicles only.

g.1. Connect connectors (1.1 and 2.1).

2-349. ACCUMULATOR

CAUTION

Be very careful not to over tighten fittings and check valves using O-ring seals. Over tightening will result in damage to O-ring and could cause fluid leakage.

NOTE

Install related hydraulic lines, hoses, nylon ties, and clamps as noted before removal.

Install fittings and elbows as noted before removal.

a. Install 90° elbow (9, Figure 2-126) with new O-ring (10) and nut (8) in bottom of accumulator (6). Tighten nut (8) securely.

b. Position accumulator (6) in mounting brackets (7).

c. Secure accumulator (6) in mounting brackets (7) using capscrew (5), new lockwasher (3), and nut (2). Tighten nut (2) securely.

d. Install cushion clamp (4) on capscrew (5) with new lockwasher (3) and nut (2). Tighten nut (2) securely.

e. Connect hydraulic line (1) to 90° elbow (9). Tighten hydraulic line (1) securely.

2-349.1. ACCUMULATOR (LVSA1 SERIES VEHICLES ONLY)

CAUTION

Be very careful not to over tighten fittings and check valves using O-ring seals. Over tightening will result in damage to O-ring and could cause fluid leakage.

NOTE

Install related hydraulic line, hoses, nylon ties, and clamps as noted before removal.

Install elbow as noted before removal.

a. Install 90° elbow (11, Figure 2-126.1) with new O-ring (12) in bottom of accumulator (9). Tighten nut (10) securely.

b. Position accumulator (9) in mounting bracket (8).

c. Secure accumulator (9) in mounting bracket (8) using capscrew (7), and nut (6). Tighten nut (6) securely.

d. Install bracket (5), washer (4), new lockwasher (3), and nut (2). Tighten nut (2) securely

e. Remove plug and connect hydraulic hose (1) to 90° elbow (11). Tighten hydraulic hose (1) securely.

2-350. PROPELLER SHAFT - TRANSMISSION TO TRANSFER CASE. Refer to Paragraph 2-341 in this manual for installation of propeller shafts.

2-351. HYDRAULIC PUMP

NOTE

Install related hydraulic lines, hoses, nylon ties, and clamps as noted before removal.

Install fittings and elbows as noted before removal.

a. Install three new O-rings (23, 24, and 25, Figure 2-125) in hydraulic lines (4, 9, and 13).

b. Install key (26) in keyway (27) on hydraulic pump (5) and align with keyway in hydraulic pump propeller shaft end yoke (15).

WARNING

The hydraulic pump is very heavy. To prevent personal injury, use a lifting device or help from assistant(s) to install hydraulic pump on mounting bracket.

c. Position hydraulic pump (5) on mounting bracket (22) and slide shaft of hydraulic pump (5) in hydraulic pump propeller shaft end yoke (15).

d. Install two washers (17), lower capscrews (16), new lockwashers (19), and nuts (18) in hydraulic pump (5).

e. Raise front end of hydraulic pump (5) in place and install two new lockwashers (21) and upper capscrews (20).

f. Tighten lower and upper capscrews (16 and 20) securely.

g. Install setscrew (14) in hydraulic pump propeller shaft end yoke (15). Tighten setscrew (14) securely.

h. Secure pressure line (13) to hydraulic pump (5) with two flange brackets (12), four new lockwashers (11), and capscrews (10). Tighten capscrews (10) securely.

i. Secure pressure line (9) to hydraulic pump (5) with two flange brackets (8), four new lockwashers (7), and capscrews (6). Tighten capscrews (6) securely.

j. Secure hydraulic supply line (4) to hydraulic pump (5) with two flange brackets (3), four new lockwashers (2), and capscrews (1). Tighten capscrews (1) securely.

2-352. HYDRAULIC PUMP PROPELLER SHAFT

a. Position hydraulic pump propeller shaft (5, Figure 2-124) in front of drive plate (2).

b. Align matchmarks on adapter plate (1) and drive plate (2) made before removal.

c. Install four new lockwashers (4) and capscrews (3) through adapter plate (1) into drive plate (2). Tighten capscrews (3) securely.

2-353. CAB WIRING HARNESS. Refer to TM 2320-34/13 for installation of cab wiring harness.

2-354. WINDSHIELD WASHER RESERVOIR, HOSES, AND NOZZLES

a. Install hose (22, Figure 2-123) on right nozzle (19).

b. Install right nozzle (19) and install nut (20). Tighten nut (20) securely.

c. Have assistant hold right nozzle (19) and install nut (20). Tighten nut (20) securely.

d. Install hose (18) on tee fitting (15) and right nozzle (19).

e. Install hose (16) on tee fitting (15) and left nozzle (17).

f. Install hose (2) on tee fitting (15).

g. Install hose (3) and spring clamp (13) on washer control valve (14).

NOTE

Defroster duct guard (12), new lockwasher (10), capscrew (9), and nut (11) will be installed at a later time.

h. Position bracket (5) on cab (23) and install two capscrews (6), new lockwashers (8), and nuts (7). Tighten nuts (7) securely.

i. Install windshield reservoir (4) on bracket (5).

j. Install hoses (2 and 3) on windshield reservoir (4) with spring clamps (1) as noted before removal.

2-354.1. WINDSHIELD WASHER RESERVOIR, HOSES, AND NOZZLES (LVSA1 Vehicles Only)

a. Install hose (29, Figure 2-123.1) on right washer elbow (26).

b. Install right washer elbow (26) and gasket (28).

c. While assistant holds right washer elbow (26), install nut (27).

d. Install hose (25) on connection tee (22) and right washer elbow (26).

e. Install hose (23) on connection tee (22) and left washer elbow (24).

f. Install hose (2) on connection tee (22).

g. Install hose (1) and spring clamp (20) on washer control valve (21).

h. Install vertical washer bottle bracket (16) onto washer bottle bracket (15) using gasket strip (19), three new locknuts (18) and capscrews (17). Tighten locknuts (18) securely.

i. Install vertical washer bottle bracket (16) and washer bottle bracket (15) using two washers (14), new lockwashers (13) and capscrews (12). Tighten capscrews (12) securely.

j. Install washer reservoir bottle (3).

k. Secure hoses (1 and 2) to main air manifold (11) using clamp (10), washer (9) and capscrew (8). Tighten capscrew (8) securely.

l. Position defroster duct cover (7) and install new lockwasher (5), capscrew (4), and nut (6). Tighten nut (5) securely.

m. Install hoses (1 and 2) in tagged locations on reservoir bottle (3).

2-355. CAB WINDOWS

a. Rear Window and Peep Glass

NOTE

This procedure works for rear window and peep glass.

(1) Coat locking strip (5, Figure 2-122) and locking channel (8) with soap solution. Use soap NSN 8250-00-634-0335 or equivalent and water to make solution.

(2) Install locking channel (8) on window frame with channel facing out.

(3) Fold inside edge (6) of locking channel (8) out.

(4) Fit new rear window or peep glass (7) in locking channel (8).

(5) Place inside edge (6) over rear window or peep glass (7).

NOTE

When installing locking strip on peep window, start at top center of locking channel.

(6) Install locking strip (5) in locking channel (8).

(7) Clean ends of locking channel (9) with primer (equivalent to Sikaflex Cleaner 205) and apply adhesive (equivalent to Sikaflex 255) to ends of locking channel (9).

(8) Check for leaks with water hose.

NOTE

Capscrew (1), washer (2), nut (3), and window guard (4) will b installed at a later time.

b. Windshield

(1) Coat windshield weather stripping (1, figure 2-121) with soap solution. Use soap, NSN 8250-00-634-0335 or equivalent and water to make solution.

(2) Install windshield weather stripping (1) so end is at bottom center of windshield frame (6).

(3) Install windshield weather stripping (1) starting at bottom and pushing downward until fully seated.

(4) Apply soap solution to windshield weather stripping (1) glass channel.

(5) Guide bottom of windshield (5), with help from assistant(s), into windshield weather stripping (1) channel and seat windshield (5).

(6) Insert flat-edged tool, from bottom of windshield, along inner molding.

(7) Work windshield weather stripping (1) all around glass until fully seated.

(8) Slide outside half (3) of windshield weather stripping (1) under inside half (4).

(9) Clean ends of weather stripping (7) with primer (equivalent to Sikaflex Cleaner 205) and apply adhesive (equivalent to Sikaflex 255) to ends of weather stripping (7).

(10) Check for leaks with water hose.

2-356. SEAT FRAME ASSEMBLY

NOTE

Operator and passenger seat frames are not alike. However, they are installed using the same procedure.

a. Install seat mount (7, Figure 2-119) on cab floor (11) using four washers (10), capscrews (9), and nuts (8). Tighten nuts (8) securely.

NOTE

Perform step (a.1.) on LVSA1 series vehicles only.

a.1. Install stop bracket (7.1) on drivers side of seat frame (6).

b. Install seat frame (6) on seat mount (7).

c. Install two nuts (5) on each side of seat frame (6). Tighten nuts (5) securely.

d. Adjust seat (1) on tracks as needed.

d.1. Install tether bracket (4.11, Figure 2-119, Sheet 2 of 2) and seat belt (4.10) on seat assembly (4.6) using washers (4.9), capscrew (4.8) and locknut (4.7).

d.2. Install tether bracket (4.5) and seat belt bracket (4.4) on seat assembly (4.6) using washer (4.3), capscrew (4.2) and locknut (4.1).

2-357. SEAT BELTS

NOTE

This procedure works for both driver and passenger seat belts.

a. Install washer (16, Figure 2-120), nut (15), upper end of seat belt (10), and nut (14) on stud (17). Tighten nuts (14 and 15) securely.

b. Install lower end of seat belt (11) in cab with new lockwasher (13) and capscrew (12). Tighten capscrew (12) securely.

c. Remove nut (8) and capscrew (9) from seat back (5).

d. Install lower end of seat belt (10) and upper end of seat belt (11) to seat back (5) using capscrew (9) and nut (8). Tighten nut (8) securely.

e. Install lower end of seat belt (4) to cab using new lockwasher (7) and capscrew (6). Tighten capscrew (6) securely.

f. Remove nut (1) and capscrew (2) from other side of seat back (5).

g. Install lower end of seat belt (3) and upper end of seat belt (4) to seat back (5) using capscrew (2) and nut (1). Tighten nut (1) securely.

2-357.1. SEAT BELTS (LVSA1 SERIES VEHICLES ONLY)

NOTE

Procedure is identical for both seats. Left seat is shown.

a. Position D-ring (22, Figure 2-120.1) in cab assembly (4) with two hardened washers (25), comfort latch (24), spacer (23), washer (21), locknut (20) and capscrew (26).

b. Tighten locknut (20) to 70 to 75 lb-in (8 N·m).

c. Install retractor unit (31) to cab assembly (4) with washer (29), capscrew (28), L-bracket (30) and locknut (27).

d. Tighten locknut (27) to 70 to 75 lb-in (8 N·m).

e. Install tether bracket (18), hardened washer (17), seat belt bracket (16) and hardened washer (19) on seat assembly (9) with hardened washer (15), capscrew (14) and locknut (13). Tighten locknut (13) until seat belt bracket can slowly rotate.

f. Install angled bracket (12) on cab assembly (4) with lockwasher (11) and capscrew (10).

g. Install hardened washer (8), two straps (7), on seat assembly (9) with hardened washer (8), capscrew (6) and locknut (5). Tighten locknut (5) until buckle can slowly rotate.

h. Install angled bracket (3) on cab assembly (4) with lockwasher (2) and capscrew (1).

2-358. DEFROSTER DUCTS

a. Position defroster ducts (1 through 4, Figure 2-118) under dash panel (6) as noted before removal.

b. Install four new nylon ties (5) on defroster ducts (1 through 4) as noted before removal.

2-359. HEATER CORE AND HEATER BLOWER ASSEMBLY

a. Heater Core

CAUTION

Be extremely careful not to damage heater core cooling fins during installation procedure.

(1) Position heater core (17, Figure 2-117) over heater housing (16).

(2) Carefully lower heater core (17) in heater housing (16).

b. Heater Blower Assembly

(1) Heater blower motor housing assembly (8) in heater housing (16).

(2) Connect wire quick disconnect (15) and wrap connection with tape conforming to MIL-I-15126.

(3) Install new star washer (13), ground wire (12), washer (11), new lockwasher (10), and capscrew (9) on blower motor housing assembly (8). Tighten capscrew (9) securely.

(4) Install two washers (7), new lockwashers (6), and capscrews (5) on blower motor housing assembly (8). Tighten capscrews (5) securely.

(5) Install heater cover (4) on heater housing (16).

(6) Install six washers (3), new lockwashers (2), and capscrews (1) in heater cover (4) and heater housing (16). Tighten capscrews (1) securely.

2-360. HEATER ASSEMBLY

a. Position heater assembly (13, Figure 2-116) in heater compartment (17).

b. Connect plug (18). Ensure plug (18) is connected properly.

c. Install bracket (16), six new lockwashers (15), and screws (14) in heater assembly (13). Tighten screws (14) securely.

d. Apply weather strip adhesive to four defroster ducts (12).

e. Connect four defroster ducts (12) to heater assembly (13) and secure defroster ducts (12) using four new nylon ties (11).

f. Install clamp (9), new lockwasher (8), and capscrew (7) on bracket (10). Tighten capscrew (7) securely.

NOTE

Refer to Paragraph 2-400 in this manual for installation of heater hoses (1) and clamps (3).

Ensure heater control cable operates freely without binding.

g. Install heater control cable (5) and retainer (4) on control arm (6).

2-361. TRANSFER CASE SHIFT LEVER

a. Apply silicone sealant conforming to MIL-A-46106 to mating surface of transfer case shift lever (3, Figure 2-115).

b. Tilt transfer case shift lever (3) outward and install through hole in mounting surface (4).

c. Install three capscrews (2) in transfer case shift lever (3) and mounting surface (4).

d. Install three nuts (1) on capscrews (2). Tighten nuts (1) securely.

e. Install shift lever knob (5) on transfer case shift lever (3) by turning transfer case shift lever knob (5) in a clockwise direction.

2-362. TRANSMISSION SHIFT CONTROL

a. Install transmission shift control (3, Figure 2-114) on mounting surface (7).

b. Install four screws with captive lockwashers (5) in transmission shift control (3). Tighten screws (5) securely.

c. Install bulb (4) in transmission shift control light socket (2) by sliding bulb (4) in and turning it clockwise until it is locked.

d. Install transmission shift control light socket (2) in transmission shift control (3) by pushing it up.

2-363. MASTER LIGHT SWITCH

a. Install master light switch (8, Figure 2-133) through panel (9) from inside.

b. Install four screws (6) and locknuts (7) in panel (9) and master light switch (8). Tighten screws (6) securely.

CAUTION

Be careful not to cross thread cannon plug when installing on back of master light switch.

c. Connect cannon plug (5) to back of master light switch (8). Tighten cannon plug (5) securely.

d. Install three washers (4), levers (3), new lockwashers (2), and screws (1) on master light switch (8). Tighten screws (1) securely.

2-364. WINDSHIELD WASHER CONTROL VALVE

NOTE

Install related air lines, hoses, nylon ties, and clamps as noted before removal.

a. Position windshield washer control valve (2, Figure 2-112) in panel (10).

b. Install nut (8) on windshield washer control valve (2). Tighten nut (8) securely.

c. Install knob (7) and setscrew (6) on windshield washer control valve (2).

NOTE

Perform step c.1 on LVSA1 series vehicles only.

c.1 Install knob (7.1) on windshield washer control valve (3).

d. Coat threads (9) of 90° elbow (5) with Pipe Sealant, Loctite 592 or equivalent and install in windshield washer control valve (2) as noted before removal.

e. Install hose (4) and spring clamp (3) on windshield washer control valve (2).

NOTE

The air lines and connections may be checked after the entire air system is completely assembled. This will be done by pressurizing the air system, to a point equivalent to normal operating air pressure, and applying a water and soap solution to lines, fittings, and connections to check for leaks. A soft-bristled brush may be needed to apply the solution. Use soap NSN 8520-00-634-0335 or equivalent.

Fittings and air lines are allowed a one inch bubble in three seconds.

f. Install air line (1) on windshield washer control valve (2). Tighten air line (1) securely.

2-365. WINDSHIELD WIPER CONTROL VALVES

NOTE

Install related air lines, hoses, nylon ties, and clamps as noted before removal.

This procedure works for both windshield wiper control valves.

a. Install new lockwasher (7, Figure 2-111) and position windshield wiper control valve (3) in panel (9).

b. Install nut (6) on windshield wiper control valve (3). Tighten nut (6) securely.

c. Install knob (5) and setscrew (4) on windshield wiper control valve (3). Tighten setscrew (4) securely.

d. Coat threads (8) of three 90° elbows (2) with Pipe Sealant, Loctite 592 or equivalent.

e. Install three 90° elbows (2) in windshield wiper control valve (3) as noted before removal.

NOTE

The air lines and connections may be checked after the entire air system is completely assembled. This will be done by pressurizing the air system, to a point equivalent to normal operating air pressure, and applying a water and soap solution to lines, fittings, and connections to check for leaks. A soft-bristled brush may be needed to apply the solution. Use soap NSN 8520-00-634-0335 or equivalent.

Fittings and air lines are allowed a one inch bubble in three seconds.

f. Connect three air lines (1) to three 90° elbows (2). Tighten air lines (1) securely.

2-366. HAND CONTROL VALVE

NOTE

Install related air lines, hoses, nylon ties, and clamps as noted before removal.

Coat threads of all elbows, straight fittings, and tee fittings with Pipe Sealant, Loctite 592 or equivalent.

Install all elbows, straight fittings, and tee fittings as noted before removal.

a. Install 90° elbow (13, Figure 2-110) in hand control valve (3).

b. Deleted.

c. Install tee fitting (10) on 90° elbow (13).

d. Install 45° elbow (11) in tee fitting (10).

e. Install 90° elbow (9) in hand control valve (3).

f. Install straight fitting (5) in 90° elbow (9).

g. Install hand control valve (3) in panel (8).

h. Install four screws (7) and new locknuts (6) in panel (8) and hand control valve (3). Tighten locknuts (6) securely.

i. Install stop light switch (4) in tee fitting (10). Refer to paragraph 2-414 for stop light switch (4) installation.

NOTE

The air lines and connections may be checked after the entire air system is completely assembled. This will be done by pressurizing the air system, to a point equivalent to normal operating air pressure, and applying a water and soap solution to lines, fittings, and connections to check for leaks. A soft-bristled brush may be needed to apply the solution. Use soap NSN 8520-00-634-0335 or equivalent.

Fittings and air lines are allowed a one inch bubble in three seconds.

j. Connect two air lines (1 and 2) to straight fitting (5) and 45° elbow (11) respectively.

2-367. WINDSHIELD WIPER MOTORS

NOTE

This procedure works for both windshield wiper motors.

NOTE

Install related air lines, hoses, nylon ties, and clamps as noted before removal.

a. Apply a light coat of Pipe Sealant, Loctite 592 or equivalent to windshield-wiper-motor-end threads of straight fittings (13, Figure 2-109) and fitting (7).

b. Install straight fittings (13) and fitting (17) in windshield wiper motor (15). Tighten straight fittings (13) and fitting (17) securely.

NOTE

Perform step b.1. on LVSA1 series vehicles only.

b.1. Install mounting plate (20) on windshield wiper motor (21) using two self-locking nuts (19) and screws (18). Torque self-locking nuts (19) to 60-70 inch-pounds (7-8 N·m).

c. Position windshield wiper motor shaft (6) under dash panel (16).

d. Install hose (14) on fitting (17).

NOTE

The air lines and connections may be checked after the entire air system is completely assembled. This will be done by pressurizing the air system, to a point equivalent to normal operating air pressure, and applying a water and soap solution to lines, fittings, and connections to check for leaks. A soft-bristled brush may be needed to apply the solution. Use soap NSN 8520-00-634-0335 or equivalent.

Fittings and air lines are allowed a one inch bubble in three seconds.

e. Connect two air lines (12) to two straight fittings (13). Tighten air lines (12) securely.

NOTE

Nut (9), lockwasher (10), capscrew (8), and defroster duct guard (11) will be installed at a later time.

f. Install two capscrews (7) through dash panel (16) and windshield wiper motor (15). Tighten capscrews (7) securely.

g. Install seal washer (5), washer (4), and nut (3) on windshield wiper motor shaft (6). Tighten nut (3) securely.

h. Install rubber shield (2) and knurled driver (1) on end of windshield wiper motor shaft (6). Ensure knurled driver (10) is on windshield wiper motor shaft (6) securely.

2-368. IGNITION SWITCH

WARNING

To prevent personal injury, ensure batteries are disconnected and do not wear watches, rings, and other jewelry when working on electrical components.

NOTE

Install related wires, nylon ties, and clamps as noted before removal.

a. Install wires (9, 10, 11, 12, and 13, Figure 2-108) on ignition switch (5), as noted before removal, using five retainers (8) and screws (7). Tighten screws (7) securely.

b. Install ignition switch (5) in dash panel (6).

c. Install knurled nut (4), knob (3), new lockwasher (2), and screw (1) on ignition switch (5). Tighten knurled nut (4) and screw (1) securely.

2-369. AIR RESTRICTION INDICATOR

NOTE

Install related air lines, hoses, nylon ties, and clamps as noted before removal.

a. Install adapter (10, Figure 2-107) in mounting flange (3). Tighten adapter (10) securely.

b. Install mounting flange (3) in dash panel (4) using two capscrews (9), new lockwashers (6), and nuts (5). Tighten nuts (5) securely.

c. Install elbow (2) on mounting flange (3). Tighten elbow (2) securely.

d. Install air restriction indicator (1) on elbow (2). Tighten air restriction indicator (1) snugly by hand - do not over tighten.

e. Install vacuum line (8) and line nut (7) on adapter (10). Tighten line nut (7) securely.

2-370. DRIVE LINE LOCKUP SWITCH

WARNING

To prevent personal injury, ensure batteries are disconnected and do not wear watches, rings, and other jewelry when working on electrical components.

NOTE

Install related air lines, hoses, wires, nylon ties, and clamps as noted before removal.

Apply sealing compound conforming to MIL-S-46163 to threads on all 90° elbows and pressure switches. Do not apply sealing compound to air-line-end threads.

Position all 90° elbows and tee fittings as noted before removal.

a. Install instruction plate (2, Figure 2-106) on dash panel (4) using four screws (15). Tighten four screws (15) securely.

b. Install 90° elbow (14) in top of drive line lockup switch (3).

c. Install tee fitting (16) on 90° elbow (17).

d. Install 90° elbow (17) and tee fitting (16) in side of drive line lockup switch (3).

NOTE

The air lines and connections may be checked after the entire air system is completely assembled. This will be done by pressurizing the air system, to a point equivalent to normal operating air pressure, and applying a water and soap solution to lines, fittings, and connections to check for leaks. A soft-bristled brush may be needed to apply the solution. Use soap NSN 8520-00-634-0335 or equivalent.

Fittings and air lines are allowed a one inch bubble in three seconds.

e. Connect three air lines (12) to two 90° elbows (13) and 90° elbow (14) respectively.

f. Install pressure switch (8) in tee fitting (16). Tighten pressure switch (8) securely.

g. Install jumper wire (11) on pressure switch (8) using new lockwasher (10) and screw (9). Tighten screw (9) securely.

h. Install wire (7) on pressure switch (8) using new lockwasher (6) and screw (5). Tighten screw (5) securely.

i. Install drive line lockup switch (3) in dash panel (4).

j. Install two screws (1) through instruction plate (2) and dash panel (4) into drive line lockup switch (3). Tighten screws (1) securely.

2-371. ETHER START SWITCH

WARNING

To prevent personal injury, ensure batteries are disconnected and do not wear watches, rings, and other jewelry when working on electrical components.

NOTE

Adjustment nut (9, Figure 2-105) allows depth adjustment of ether start switch (3) in dash panel (4).

a. Install adjustment nut (9) on ether start switch (3) as noted before removal.

b. Install wires (7 and 8) on ether start switch (3) using two new star washers (6) and screws (5). Tighten screws (5) securely.

c. Install ether start switch (3) in dash panel (4).

d. Install knurled nut (2) on ether start switch (3). Tighten knurled nut (2) securely.

e. Install rubber boot (1) on ether start switch (3). Ensure boot (1) is installed properly.

2-372. PARKING BRAKE VALVE

NOTE

Install related air lines, hoses, nylon ties, and clamps as noted before removal.

Apply sealing compound conforming to MIL-S-46163 to threads on all 90° elbows and pressure switches. Do not apply sealing compound to air-line-end threads.

Position all 90° elbows and tee fittings as noted before removal.

a. Install tee fitting (14, Figure 2-104) in parking brake valve (4).

b. Deleted.

c. Install straight fitting (12) in tee fitting (14).

d. Install 90° elbow (11) in tee fitting (14).

e. Install 90° elbows (10 and 13) in parking brake valve (4).

f. Position parking brake valve (4) under dash panel (5).

NOTE

The air lines and connections may be checked after the entire air system is completely assembled. This will be done by pressurizing the air system, to a point equivalent to normal operating air pressure, and applying a water and soap solution to lines, fittings, and connections to check for leaks. A soft-bristled brush may be needed to apply the solution. Use soap NSN 8520-00-634-0335 or equivalent.

Fittings and air lines are allowed a one inch bubble in three seconds.

g. Connect three air lines (6, 7, and 9) to 90° elbows (10, 11, and 13) respectively. Tighten air lines (6, 7, and 9) securely.

h. Connect air line (8) to straight fitting (12). Tighten air line (8) securely.

i. Install parking brake valve (4) in dash panel (5).

j. Install nut (3) on parking brake valve (4). Tighten nut (3) securely.

k. Install knob (2) and new roll pin (1) on parking brake valve (4). Ensure roll pin (1) is installed properly.

2-373. TRAILER AIR SUPPLY VALVE

WARNING

To prevent personal injury, ensure batteries are disconnected and do not wear watches, rings, and other jewelry when working on electrical components.

NOTE

Install related wires, air lines, hoses, nylon ties, and clamps as noted before removal.

Apply sealing compound conforming to MIL-S-46163 to threads on all 90° elbows and pressure switches. Do not apply sealing compound to air-line-end threads.

Position all 90° elbows and tee fittings as noted before removal.

a. Install tee fitting (13, Figure 2-103) in trailer air supply valve (11).

b. Install 90° elbow (7) and pressure switch (3) in tee fitting (13).

c. Install 90° elbows (5 and 6) in trailer air supply valve (11).

d. Install trailer air supply valve (11) in dash panel (12).

e. Install nut (10) on trailer air supply valve (11). Tighten nut (10) securely.

f. Install knob (9) on trailer air supply valve (11) with new roll pin (8).

NOTE

The air lines and connections may be checked after the entire air system is completely assembled. This will be done by pressurizing the air system, to a point equivalent to normal operating air pressure, and applying a water and soap solution to lines, fittings, and connections to check for leaks. A soft-bristled brush may be needed to apply the solution. Use soap NSN 8520-00-634-0335 or equivalent.

Fittings and air lines are allowed a one inch bubble in three seconds.

g. Connect two electrical wires (1) to pressure switch (3). Ensure wires (1) are connected properly.

h. Connect three air lines (4) to 90° elbows (5, 6, and 7). Tighten air lines (4) securely.

2-374. LOW AIR PRESSURE ALARM

WARNING

To prevent personal injury, ensure batteries are disconnected and do not wear watches, rings, and other jewelry when working on electrical components.

NOTE

Install related wires, nylon ties, and clamps as noted before removal.

a. Install one screw (1, Figure 2-102) and wire (3) on positive terminal (7) of low air pressure alarm (5).

b. Install one screw (1) and wire (2) on negative terminal (6) of low air pressure alarm (5).

c. Install low air pressure alarm (5) in dash panel (8).

d. Install knurled nut (4) on low air pressure alarm (5). Tighten knurled nut (4) securely.

2-375. INSTRUMENT PANEL ASSEMBLY

WARNING

To prevent personal injury, ensure batteries are disconnected and do not wear watches, rings, and other jewelry when working on electrical components.

NOTE

Install related wires, air lines, hoses, nylon ties, and clamps as noted before removal.

a. Position instrument panel assembly (2, Figure 2-101) on dash panel (3).

b. Connect harness plug (8) to instrument panel assembly (2). Tighten harness plug (8) securely.

c. Connect plug (6) to socket (7). Ensure plug (6) is connected properly.

NOTE

The air lines and connections may be checked after the entire air system is completely assembled. This will be done by pressurizing the air system, to a point equivalent to normal operating air pressure, and applying a water and soap solution to lines, fittings, and connections to check for leaks. A soft-bristled brush may be needed to apply the solution. Use soap NSN 8520-00-634-0335 or equivalent.

Fittings and air lines are allowed a one inch bubble in three seconds.

d. Connect two air lines (4 and 5) to air pressure gauge (9). Tighten air lines (4 and 5) securely.

e. Install instrument panel assembly (2) in dash panel (3) using six screws (1). Tighten screws (1) securely.

2-376. MAP LIGHT

WARNING

To prevent personal injury, ensure batteries are disconnected and do not wear watches, rings, and other jewelry when working on electrical components.

NOTE

Install related wires, nylon ties, and clamps as noted before removal.

a. Install toggle switch (11, Figure 2-100). Refer to Paragraph 2-382.

b. Install wire (12) and screw (10) on toggle switch (11). Tighten screw (10) securely.

NOTE

Locknut (7), capscrew (8), and defroster duct guard (9) will be installed at a later time.

c. Install gasket (6) and base (5) on mounting surface (13).

d. Install two screws (3) and nuts (4) through base (5), gasket (6), and mounting surface (13). Tighten nuts (4) securely.

e. Install bulb (2) in base (5). Ensure bulb (2) is installed properly in base (5).

f. Position lens (1) on base (5) and rotate 1/4 turn to lock in place.

2-377. DOME LIGHT

WARNING

To prevent personal injury, ensure batteries are disconnected and do not wear watches, rings, and other jewelry when working on electrical components.

NOTE

Install related wires, nylon ties, and clamps as noted before removal.

a. Install dome light bracket (8, Figure 2-99) on vehicle using two capscrews (7). Tighten capscrews (7) securely.

b. Connect wire (9) and install dome light base (6) on dome light bracket (8).

c. Install four Phillips-head screws (5) in dome light base (6). Tighten screws (5) securely.

d. Install bulb (3) in socket fixture (4). Ensure bulb (3) is installed properly in socket fixture (4).

e. Install lens (2) on dome light base (6) using two Phillips-head screws (1). Tighten screws (1) securely.

2-378. RESISTORS

WARNING

To prevent personal injury, ensure batteries are disconnected and do not wear watches, rings, and other jewelry when working on electrical components.

NOTE

Install related wires, nylon ties, and clamps as noted before removal.

This procedure works for all resistors on the MK48.

a. Install resistor (4, Figure 2-98) on mounting surface (6).

b. Install two screws (3) in resistor (4) and mounting surface (6). Tighten screws (3) securely.

c. Connect two wires (1 and 2) to connectors (5). Ensure wires (1 and 2) are connected properly.

2-379. RELAY SWITCHES

WARNING

To prevent personal injury, ensure batteries are disconnected and do not wear watches, rings, and other jewelry when working on electrical components.

NOTE

Install related wires, nylon ties, and clamps as noted before removal.

This procedure works for all relay switches on the MK48.

a. Position relay switch (2, Figure 2-97) on mounting surface (6).

b. Install ground wire (5) on relay switch (2) using a new star washer (4) and capscrew (3). Tighten capscrew (3) securely.

c. Connect plug (1) to relay switch (2). Ensure plug (1) is connected properly.

2-380. MAGNETIC SWITCHES

WARNING

To prevent personal injury, ensure batteries are disconnected and do not wear watches, rings, and other jewelry when working on electrical components.

NOTE

Install related wires, nylon ties, and clamps as noted before removal.

This procedure works for all magnetic switches on the MK48.

a. Install magnetic switch (9, Figure 2-96) on mounting surface (10).

b. Install two new star washers (8), wire (5), and two capscrews (7) in magnetic switch (9) and mounting surface (10). Tighten capscrews (7) securely.

c. Install wires (5 and 6) on top of magnetic switch (9) using two nuts (4). Tighten nuts (4) securely.

d. Install two wires (2 and 3) on side of magnetic switch (9) using two nuts (1). Tighten nuts (1) securely.

2-381. CIRCUIT BREAKERS

WARNING

To prevent personal injury, ensure batteries are disconnected and do not wear watches, rings, and other jewelry when working on electrical components.

NOTE

Install related wires, nylon ties, and clamps as noted before removal.

This procedure works for all circuit breakers on the MK48.

a. Install circuit breaker (1, Figure 2-95) on mounting strip (22).

b. Install two new star washers (21) and capscrews (20) in circuit breaker (1) and mounting strip (22). Tighten capscrews (20) securely.

c. Install bus bar (19), one wire (15), and nut (14) on circuit breaker (2). Tighten nut (14) securely.

d. Install bus bar (19) and nut (18) on circuit breaker (3). Tighten nut (18) securely.

e. Connect two wires (15) to terminal (17) using nut (14). Tighten nut (14) securely.

f. Repeat steps a through e for remaining circuit breakers.

2-382. TOGGLE SWITCHES

WARNING

To prevent personal injury, ensure batteries are disconnected and do not wear watches, rings, and other jewelry when working on electrical components.

NOTE

Install related wires, nylon ties, and clamps as noted before removal.

This procedure works for all toggle switches on the MK48 including two- and three-position toggle switches.

a. Install wires (7, Figure 2-94) on toggle switch (2) using screws (6). Tighten screws (6) securely.

b. Install nut (5) and washer (4) on toggle switch (2).

c. Install toggle switch (2) in panel (3).

d. Install nut (1) on toggle switch (2). Tighten nut (1) securely.

2-383. OPTIC RIBBONS

NOTE

Install optic ribbons as noted before removal.

a. Install clip (4, Figure 2-93) in panel (5). Ensure clip (4) is properly installed.

b. Install title applique (3) in clip (4). Ensure title applique (3) is properly installed.

2-384. OPTIC RIBBON LIGHT SOURCE

a. Install clip (8, Figure 2-92) in optic ribbon light source (6).

b. Install bulb (2) in socket (1). Ensure bulb (2) is properly installed.

c. Plug socket (1) in optic ribbon light source (6).

d. Plug in three optic ribbons (3, 4, and 5) to optic ribbon light source (6).

e. Position optic ribbon light source (6) under dash panel (7) and clip it in place.

2-385. WARNING/INDICATOR LIGHTS

NOTE

This procedure works for all warning/indicator lights on MK48.

a. Install new star washer (6, Figure 2-91) on lens assembly (3).

b. Install lens assembly (3) in panel (7).

c. Install nut (5) on lens assembly (3). Tighten nut (5) securely.

d. Install rubber shield (4) on front of lens assembly (3). Ensure rubber shield (4) is installed properly.

e. Install bulb (2) in socket (1). Ensure bulb (2) is installed properly.

f. Install socket (1) and bulb (2) in rear of lens assembly (3). Ensure socket (1) is installed properly.

2-386. ACCESS COVERS

a. Auxiliary Access Cover

(1) Position auxiliary access cover (9, Figure 2-90) in cab (10).

(2) Install ten screw and washer assemblies (4) in auxiliary access cover (9). Tighten screw and washer assemblies (4) securely.

b. Center Heater Compartment Access Cover

(1) Install center heater compartment access cover (8) in cab (10).

(2) Install four screw and washer assemblies (4) in center heater compartment access cover (8). Tighten screw and washer assemblies (4) securely.

c. Front Heater Compartment Access Cover

(1) Install front heater compartment access cover (7) in cab (10).

(2) Install eight screw and washer assemblies (4) in front heater compartment access cover (7). Tighten screw and washer assemblies (4) securely.

d. Left Access Cover

(1) Install left access cover (6) in cab (10).

(2) Install four screw and washer assemblies (4) in left access cover (6). Tighten screw and washer assemblies (4) securely.

e. Front Engine Access Cover

(1) Install front engine access cover (5) in cab (10).

(2) Install nine screw and washer assemblies (4) in front engine access cover (5). Tighten screw and washer assemblies (4) securely.

f. Rear Heater Compartment Access Cover

(1) Install rear heater compartment access cover (3) in cab (10).

(2) Install eight screws (13) and placards (12) in rear heater compartment access cover (3). Tighten screws (13) securely. Refer to Paragraph 2-310 in this manual for installation of placards (12).

(3) Install three warning/indicator lights (11) in rear heater compartment access cover (3). Refer to Paragraph 2-385 in this manual for installation of warning/ indicator lights (11).

(4) Install four screw and washer assemblies (4) in rear heater compartment access cover (3). Tighten screw and washer assemblies (4) securely.

g. Top Engine Access Cover

(1) Install top engine access cover (2) in cab (10).

(2) Install 12 screw and washer assemblies (4) in top engine access cover (2). Tighten screw and washer assemblies (4) securely.

h. Roof Access Cover

(1) Install roof access cover (1, Figure 2-89) in cab (3).

(2) Install 36 capscrews (2) in roof access cover (1). Tighten capscrews (2) securely.

2-387. HEADLIGHT DIMMER SWITCH

WARNING

To prevent personal injury, ensure batteries are disconnected and do not wear watches, rings, and other jewelry when working on electrical components.

NOTE

Install related wires, nylon ties, and clamps as noted before removal.

a. Install wires (7, 8, 9, 10, 11, and 12, Figure 2-88), two retainers (6), new lockwasher (14), and three screws (5 and 13) on headlight dimmer switch (3). Tighten screws (5 and 13) securely.

b. Install headlight dimmer switch (3) on mounting plate (4).

c. Install two new lockwashers (2) and capscrews (1) in headlight dimmer switch (3). Tighten capscrews (1) securely.

2-388. SUN VISORS

NOTE

This procedure works for both sun visors.

a. Position sun visor (1, Figure 2-87) in cab (3) as noted before removal.

b. Install four capscrews (2) in sun visor (1). Tighten capscrews (2) securely.

2-389. AIR HORN CONTROL VALVE AND CHAIN

a. Air Horn Control Valve

NOTE

Install related air lines, hoses, nylon ties, and clamps as noted before removal.

(1) Coat threads of 90° elbows (7 and 9, Figure 2-86) with Pipe Sealant, Loctite 592 or equivalent and install 90° elbows (7 and 9), as noted before removal, in control valve (2).

(2) Install control valve (2) in cab (10) using two lockwashers (6) and screws (5). Tighten screws (5) securely.

NOTE

The air lines and connections may be checked after the entire air system is completely assembled. This will be done by pressurizing the air system, to a point equivalent to normal operating air pressure, and applying a water and soap solution to lines, fittings, and connections to check for leaks. A soft-bristled brush may be needed to apply the solution. Use soap NSN 8520-00-634-0335 or equivalent.

Fittings and air lines are allowed a one inch bubble in three seconds

(3) Connect two air lines (1) to 90° elbows (7) Tighten air lines (1) securely.

b. Air Horn Chain

(1) Install chain (4) and screw (8) in cab (10) as noted before removal

(2) Install chain (4) on control valve (2) by spreading chain link (3). Once chain is installed, squeeze chain link (3) together to prevent it from coming off of control valve (2).

2-390. MIRROR BRACKET AND DOOR

a. Mirror Bracket

(1) Position mirror bracket (8, Figure 2-85) on door (5) as noted before removal.

(2) Install six capscrews (7) in mirror bracket (8). Tighten capscrews (7) securely.

b. Door

(1) Install hinge (6) on cab (10) as noted before removal.

(2) Install nine capscrews (9) in hinge (6). Tighten capscrews (9) securely.

WARNING

The door is heavy and awkward to handle. To prevent personal injury, use an overhead lifting device to install door on hinge.

(3) Install door (5), if removed, on hinge (6) using an overhead lifting device.

(4) Install ten capscrews (4) in hinge (6) and door (5). Tighten capscrews (4) securely.

(5) Install door strap (3), two new lockwashers (2), and capscrews (1) on door (5) and cab (10). Tighten capscrews (1) securely.

2-391. FRAME 90° GEAR BOX

WARNING

Frame 90° gear box is heavy. Have assistant help install frame 90° gear box on mounting plate.

a. Install frame 90° gear box (5, Figure 2-84) on mounting plate (4).

b. Install four washers (3), new lockwashers (2), and capscrews (1) in mounting plate (4) and frame 90° gear box (5). Tighten capscrews (1) securely.

2-392. ELECTRIC HORNS

WARNING

To prevent personal injury, ensure batteries are disconnected and do not wear watches, rings, and other jewelry when working on electrical components.

NOTE

Install related wires, nylon ties, and clamps as noted before removal.

a. Install brackets (7, Figure 2-83) on electric horns (2).

b. Install two nuts (6) on electric horns (2) to secure brackets (7). Torque nuts (6) to 10 ft-lbs (13.6 N·m).

c. Install electric horns (2)and brackets (7) to mounting surface (8).

d. Install one new star washer (4), two wires (5), one new star washer (4), and capscrew (3) in bracket (7) and mounting surface (8). Tighten capscrew (3) securely.

e. Connect two wires (1 and 5) to electric horns (2). Ensure wires (1 and 5) are connected properly.

2-393. AIR HORNS

NOTE

Install related air lines, hoses, nylon ties, and clamps as noted before removal.

a. Install gasket (14, Figure 2) and air horn (4) on bracket (3).

b. Install washer (11), capscrew (10), new lockwasher (13), and nut (12) in air horn (4) and bracket (3). Tighten nut (12) securely.

c. Install washer (9), new lockwasher (8), and nut (7) on air horn (4). Tighten nut (7) securely.

d. Coat air-horn-end threads of 90° elbow (6) with Pipe Sealant, Loctite 592 or equivalent. Do not coat air-line-end threads of 90° elbow with pipe sealant.

e. Install 90° elbow (6) in air horn (4) as noted before removal.

f. Place air horn (4) in mounting position by inserting through access hole.

g. Position air horn (4) and bracket (3) on vehicle.

h. Install two new lockwashers (2) and capscrews (1) in bracket (3) to secure bracket (3) with air horn (4) to vehicle. Tighten capscrews (1) securely.

NOTE

The air lines and connections may be checked after the entire air system is completely assembled. This will be done by pressurizing the air system, to a point equivalent to normal operating air pressure, and applying a water and soap solution to lines, fittings, and connections to check for leaks. A soft-bristled brush may be needed to apply the solution. Use soap, NSN 8520-00-634-0335 or equivalent.

Fittings and air lines are allowed a one inch bubble in three seconds.

i. Connect air line (5) to 90° elbow (6). Tighten air line (5) securely.

2-394. WINDSHIELD WIPER BLADES AND WIPER ARMS

a. Install hose (4, Figure 2-81) on nozzle (10). Ensure hose (4) is installed properly.

b. Install new windshield wiper blade (9) on windshield wiper arm (6). Ensure new windshield wiper blade (9) is installed properly.

c. Install nozzle (10), screw (7), and nut (8) on windshield wiper arm (6). Tighten nut (8) securely.

d. Install windshield wiper arm (6) on windshield wiper arm drive stud (3) as noted before removal. Ensure windshield wiper arm (6) is installed properly and is in the correct position for proper operation.

e. Install hose (4) on connector (5). Ensure hose (4) is installed properly.

f. Install new lockwasher (2) and new locknut (1) on windshield wiper arm drive stud (3). Tighten locknut (1) securely.

NOTE

Perform step f.1. on LVSA1 series vehicles only.

f.1. Install new lockwasher (2.1) and acorn nut (1.1) on windshield wiper arm drive stud (3). Torque acorn nut (1.1) to 90-110 inch-pounds (10-12 N·m).

2-395. ROOF VENT

a. Coat sealing surface of roof (5, Figure 2-80) with silicone sealant conforming to MIL-A-46106.

b. Install new gasket (6) and roof vent (4) in position on roof (5).

c. Install 12 lockwashers (3), screws (2) and new locknuts (1) in roof vent (4). Tighten locknuts (1) securely.

2-396. RUBBER FENDERS - CAB

NOTE

This procedure works for both rubber fenders on cab.

a. Position rubber fender (4, Figure 2-79) on cab (5) as noted before removal.

b. Install metal strip (3), six new lockwashers (2), and capscrews (1) on rubber fender (4) and cab (5). Tighten capscrews (1) securely.

2-397. GRAB HANDLES - CAB

a. Install grab handle (6, Figure 2-78), two capscrews (5), defroster duct guard (4), and new locknuts (1) on dash panel (7). Tighten locknuts (1) securely.

NOTE

This procedure works for both grab handles on outside of cab.

b. Install grab handles (8) on cab (9) using two capscrews (5), and new locknuts (1). Tighten locknuts (1) securely.

2-398 MIRROR ASSEMBLY

NOTE

This procedure works for both mirror assemblies on cab.

a. Install mirror (17, Figure 2-77), washer (15), capscrew (16), washer (15), and nut (14) on bracket (18). Tighten nut (14) snugly at this time. Nut (14) will not be finally tightened until mirror adjustment is made.

b. Install mirror assembly (6), new star washer (12), capscrew (13), and spacer (11) on bottom of mirror assembly (6) and bracket (19).

c. Install new star washer (4), capscrew (5), spacer (3), new lockwasher (2), and nut (1) on top of mirror assembly (6).

d. Install mirror and bracket assembly (10) on capscrew (13) and bracket (19).

e. Install washer (9), lockwasher (8), and nut (7) on capscrew (13).

f. Make final adjustments to mirror assembly (6) and mirror and bracket assembly (10) while sitting in driver's seat. Help from an assistant may be needed to properly adjust mirrors.

g. After final adjustment, tighten nuts (1, 7, and 14) securely.

2-399 CAB

a. Install two rubber biscuits (31, figure 2-76, Sheet 2 of 2) in cab side supports (32) and one rubber biscuit (22) on cab front support (33).

b. Attach suitable lifting device to cab (30) so it will be balanced when lifted.

WARNING

The cab is very heavy. To prevent personal injury, use proper lifting slings and an overhead lifting device to install cab.

To prevent personal injury or damage to equipment, assistant(s) may be needed to guide cab on frame assembly in proper positions.

To prevent personal injury, direct personnel to stay clear of cab during installation procedures.

c. Position cab (30) over vehicle and lower while assistant(s) guides cab (30) on cab side supports (32) and cab front support (33).

d. Install two capscrews (27), washers (29), and nuts (28) on cab side supports (32). Torque nuts (28) to 170 ft-lb (231 N·m).

e. Install ground wire (25), capscrew (23), and new locknut (24) onto cab mounting bracket (26).

e.1. Apply corrosion preventive compound to ground wire terminal (25) and locknut (24).

f. Install capscrew (19), washer (21), and nut (20) on cab front support (33). Torque nut (20) to 280 ft-lb (380 N·m).

g. Install two air lines (17 and 18) to cab (30) as shown. Tighten air lines (17 and 18) securely.

h. Install electrical connector (16) to cab (30) as shown. Tighten electrical connector (16) securely.

i. Connect three electrical connectors (15) to cab (30) as shown. Tighten electrical connectors (15) securely.

j. Position DCA connector (12, Figure 2-76, Sheet 1 of 2) in DCA cover (9).

k. Install DCA connector cap (13) and chain (14) on DCA cover (9).

l. Install four capscrews (10) and new locknuts (11) in DCA cover (9) and DCA connector (12). Tighten locknuts (11) securely.

m. Connect four air lines (7) to cab (30) as shown. Tighten air lines (7) securely.

o. Install woodruff key (6) in shaft (4).

NOTE

If frame 90° gear box is installed, it may be necessary to loosen frame 90° gear box in order to connect steering shaft end yoke. Tighten frame 90° gear box once steering shaft end yoke is connected.

p. Slide frame 90° gear box (5) towards steering shaft end yoke (3) connecting it with shaft (4).

q. Install clamping capscrew (1) and nut (2) on steering shaft end yoke (3). Tighten nut (2) securely.

2-400. HEATER HOSES AND FITTINGS

NOTE

Coat threads of all fittings and reducer bushings with Pipe Sealant, Loctite 592 or equivalent.

a. Install fitting (19, Figure 2-75) in reducer bushing (20). Tighten fitting (19) securely.

b. Install 90° elbow (17), if removed, in reducer bushing (18) as noted before removal.

c. Install two nipple fittings (16) in bracket (15). Tighten nipple fittings (16) securely.

d. Install heater control valve (14) on nipple fitting (16) as noted before removal.

NOTE

Ensure heater hoses are installed in same position as noted before removal.

e. Place hose clamps (1 and 2) on new hose (3).

f. Install new hose (3) on heater control valve (14) and heater core tube (21). Tighten hose clamps (1 and 2) to 40 inch-pounds (4.5 N·m).

g. Place hose clamps (9 and 10) on new hose (13).

h. Install new hose (13) on fitting (19) and nipple fitting (16). Tighten hose clamps (9 and 10) to 40 inch-pounds (4.5 N·m).

i. Place hose clamps (1 and 11) on new hose (12).

j. Install new hose (12) on 90° elbow (17) and heater core tube (22). Tighten hose clamps (1 and 11) to 40 inch-pounds (4.5 N·m).

k. Install clamp (8) on new hose (12) and secure with washer (6), new lockwasher (5), capscrew (4), washer (6), and nut (7) to bracket (15). Tighten nut (7) securely.

2-401. HEATER CONTROL VALVE CABLE

a. Install heater control valve cable (3, Figure 2-74) in mounting hole (8).

b. Install new lockwasher (6) and nut (5) on heater control valve cable (3). Tighten nut (5) securely.

c. Push control valve cable (3) through mounting hole (8) until control knob (7) stops and tighten nut (5) securely.

d. Route heater control valve cable (3) through hole (9).

e. Install heater control valve cable (3) on pin (4).

f. Install clamp (2) on heater control valve cable (3) and secure with screw (1). Tighten screw (1) securely.

2-402. TRANSFER CASE SHIFT CABLE

NOTE

Install related nylon ties and clamps as noted before removal.

a. Route transfer case shift cable (6, Figure 2-73) loosely in place.

b. Install clevis (3), clevis pin (2) and new cotter pin (1) on shift lever (4).

c. Seat transfer case shift cable (6) in slot in bracket (7) and tighten new locknut (5) securely.

d. Install clamp (9) around transfer case shift cable (6) and install capscrew (8). Tighten capscrew (8) securely.

e. Install new nylon tie (10) between clamps (9 and 15).

f. Install clamp (15) around shift cable (6).

g. Install capscrew (13), new lockwasher (12), and nut (11) through clamp (15) and bracket (14). Tighten nut (11) securely.

h. Install clamp (18) around transfer case shift cable (6).

i. Install capscrew (16) and spacer (17) on clamp (18). Torque capscrew (16) to 10-13 ft-lb (13.6-17.6 N.m).

j. Install clevis (21), clevis pin (20), and new cotter pin (19) on shift shaft (22).

k. Seat transfer case shift cable (6) in slot in bracket (25) and tighten new locknut (24) securely.

l. Refer to Section VI for adjustment of transfer case shift cable (6).

2-403. TRANSMISSION SHIFT CABLE

NOTE

Install related nylon ties and clamps as noted before removal.

a. Install two spacers (30, Figure 2-72), bracket (29), and two capscrews (28) on transmission (32). Torque capscrews (28) to 10-13 ft-lb (13.6-17.6 N.m).

NOTE

Ensure jamnuts (17) are on both ends of transmission shift cable.

b. Install jamnuts (17) and cable anchors (12 and 23) on ends of transmission shift cable (6).

c. Install washer (22) and new cotter pin (21) to secure transmission shift cable (6) to transmission shift lever (31).

d. Lock jamnut (17) on transmission shift cable (6) against cable anchor (23).

e. Install two capscrews (18) and new locknuts (19) to secure clamp (20) to transmission shift cable (6). Tighten locknuts (19) securely.

f. Push shift lever (31) all the way to rear of transmission (32).

g. Move shift lever (31) forward one click to put transmission in neutral.

h. Ensure transmission shifter (1) is in the neutral position.

i. Install shift selector end of transmission shift cable (6) through rubber boot (9).

j. Install two capscrews (15) and new locknuts (14) to secure clamp (16) to transmission shift cable (6). Tighten locknuts (14) securely.

k. Install cable anchor (12) on end of transmission shift cable (6).

l. Adjust cable anchor (12) to fit in hole on shift lever bracket (13) and lock jamnut (17) against cable anchor (12).

m. Install washer (11) and new cotter pin (10) on cable anchor (12). Spread ends of cotter pin (10) to secure it in place.

n. Install rubber boot (9) over shift lever bracket (13).

o. Install four washers (8) and capscrews (7) in rubber boot (9). Tighten capscrews (7) securely.

p. Connect three wires (3, 4, and 5). Ensure wires (3, 4, and 5) are connected properly.

q. Wrap wires (3, 4, and 5) with electrical tape conforming to MIL-I-15126.

r. Wrap new nylon ties (2) around transmission shift cable (6) and wires (3, 4, and 5) to secure them in place.

s. Install clip (26) to engine block (33) using washer (27), new lockwasher (25), and capscrew (24). Tighten capscrew (24) securely.

t. Check operation of transmission shift cable (6). Transmission shift cable (6) must move freely and smoothly.

2-404. CAB STEPS

NOTE

This procedure works for both cab steps.

a. Hold cab step (5) in place and install four capscrews (20), new lockwashers (21) and washers (22).

b. Tighten capscrews (20) securely.

NOTE

Perform steps c thru h on LVSA1 series vehicles only.

c. Install step support (17) onto cab step (5) with three capscrews (19) and new locknuts (18). Tighten locknuts (18) securely.

d. Install step link (12) onto step support (17) with capscrew (14), washer (15), spacer (16) and new locknut (13). Tighten locknut (13) securely.

e. Install lower step (7) onto step link (12) with capscrew (9), washer (10), spacer (11) and new locknut (8). Tighten locknut (8) securely.

f. Install chain (4) to lower step (7) with rapid link (6).

g. Apply adhesive to capscrew (2) threads.

h. Install chain (4) onto cab step (5) with capscrew (2), five washers (3) and new locknut (1). Tighten locknut (1) securely.

i. Install clearance light. Refer to paragraph 2-406 in this manual for installation of clearance lights.

2-405. REFLECTORS

NOTE

This procedure works for all reflectors.

a. Position reflector (2, Figure 2-70) on side of cab (3).

b. Install two new self-tapping screws (1) in reflector (2). Tighten self-tapping screws (1) securely.

2-406. CLEARANCE LIGHTS AND CLEARANCE LIGHT MOUNTING BRACKET

a. Clearance Lights

WARNING

To prevent personal injury, ensure batteries are disconnected and do not wear watches, rings, and other jewelry when working on electrical components.

NOTE

This procedure works for all clearance lights.

Some bases are installed with only two screws, washers, and locknuts.

(1) Position gasket (18, Figure 2-69) and base (17) on clearance light mounting bracket (1).

(2) Install four screws (14), washers (15), and new locknuts (16) in base (17). Tighten screws (14) securely.

(3) Install socket (12) and screw (13) in base (17). Tighten screw (13) securely.

(4) Coat interior of socket (12) with anti-corrosion conductive compound conforming to MIL-S-8660 and install bulb (11) in socket (12). Ensure bulb (11) is installed properly.

(5) Install lens (10) and two push-on retainers (9) in lens housing (8).

(6) Install two screws (7) in lens housing (8), lens (10), and retainers (9). Tighten screws (7) securely.

(7) Connect wire (5) at plug (6). Ensure plug (6) is connected properly.

b. Clearance Light Mounting Bracket

WARNING

To prevent personal injury, ensure batteries are disconnected and do not wear watches, rings, and other jewelry when working on electrical components.

(1) Connect connector (4) to cab wiring harness and position clearance light mounting bracket (1) on vehicle.

NOTE

It may be necessary to have an assistant hold clearance light mounting bracket while screws are being installed.

(2) Install six new star washers (3) and screws (2) in clearance light mounting bracket (1). Tighten screws (2) securely.

2-407. COMPOSITE LIGHTS

WARNING

To prevent personal injury, ensure batteries are disconnected and do not wear watches, rings, and other jewelry when working on electrical components.

NOTE

This procedure works for both composite lights.

Headlight guard (4, Figure 2-68) will be installed at a later time.

a. Position composite light body (11, Figure 2-68) on vehicle.

b. Install two new star washers (17) and capscrews (16) in composite light body (11). Tighten capscrews (16) securely.

c. Connect three wires (12, 13, and 14) at plugs (15) to cab wiring harness.

2-408. HEADLIGHT ASSEMBLY

WARNING

To prevent personal injury, ensure batteries are disconnected and do not wear watches, rings, and other jewelry when working on electrical components.

NOTE

This procedure works for both headlight assemblies.

Headlight guard (4, Figure 2-67) will be installed at a later time.

a. Install new gasket (25) on headlight assembly (34).

b. Install headlight assembly (34) on vehicle.

c. Install three new lockwashers (27) and nuts (26) on rubber mounts (28). Tighten nuts (26) securely.

d. Connect harness wires (22, 23, and 24) to headlight housing (10). Ensure harness wires (22, 23, and 24) are connected properly.

2-409. MAIN AIR MANIFOLD

NOTE

Install fittings and related air lines, hoses, nylon ties, and clamps as noted before removal.

Coat threads of all elbows and straight fittings Pipe Sealant, Loctite 592 or equivalent.

NOTE

Install all elbows, nipples, straight fittings, and tee fittings as noted before removal.

The air lines and connections may be checked after the entire air system is assembled. This will be done by pressurizing the air system to a point equivalent to normal operating air pressure, and applying a water and soap solution to lines, fittings, and connections to check for leaks. A softbristled brush may be needed to apply the solution. Use soap NSN 8520-00-634-0335 or equivalent.

Fittings and air lines are allowed a one inch bubble in three seconds.

a. Install all fittings, if removed, in main air manifold (9, Figure 2-66).

b. Position main air manifold (9) in cab.

c. Connect air lines (14 through 23) to fittings on bottom side of main air manifold (9). Tighten air lines (14 through 23) securely.

d. Install four new lockwashers (13) and capscrews (12) in main air manifold (9) and cab. Tighten capscrews (12) securely.

NOTE

Perform steps d.1 and d.2 on LVSA1 series vehicles only.

d.1. Install three capscrews (12.3), new lockwashers (12.2), and nuts (12.1) in main air manifold (9) and cab. Tighten capscrews (12.3) securely.

d.2. Install clamp (13.2) using capscrew (12.3) washer (13.1), new lockwasher (12.2), and nut (12.1). Tighten nut (12.1) securely.

e. Connect air lines (1 through 8) and air lines (10 and 11) to fittings on top and bottom edges of main air manifold (9) respectively. Tighten air lines (1 through 8) securely.

2-410. INSTRUMENT PANEL AIR MANIFOLDS

NOTE

Install related air lines, hoses, nylon ties, and clamps as noted before removal.

Coat threads of all elbows and straight fittings Pipe Sealant, Loctite 592 or equivalent.

Install all elbows, nipples, and straight fittings as noted before removal.

The air lines and connections may be checked after the entire air system is assembled. This will be done by pressurizing the air system to a point equivalent to normal operating air pressure, and applying a water and soap solution to lines, fittings, and connections to check for leaks. A soft-bristled brush may be needed to apply the solution. Use soap NSN 8540-00-634-0335 or equivalent.

Fittings and air lines are allowed a one inch bubble in three seconds.

a. Right Instrument Panel Air Manifold

(1) Install two plugs (24, Figure 2-65, Sheet 2 of 2) in right instrument panel air manifold (23). Tighten plugs (24) securely.

(2) Install two 45° elbows (26 and 27) in right instrument panel air manifold (23).

(3) Install two straight fittings (25 and 29) in right instrument panel air manifold (23).

(4) Install two 90° elbows (30 and 31) in right instrument panel air manifold (23).

(5) Install right instrument panel air manifold (23) on mounting plate (32).

(6) Install two capscrews (28) in right instrument panel air manifold (23) and mounting plate (32). Tighten capscrews (28) securely.

(7) Connect air lines (21 and 22) to 45° elbows (26 and 27) respectively. Tighten air lines (21 and 22) securely.

(8) Connect air lines (19 and 20) to straight fittings (25 and 29) respectively. Tighten air lines (19 and 20) securely.

(9) Connect air lines (17 and 18) to 90° elbows (30 and 31) respectively. Tighten air lines (17 and 18) securely.

b. Left Instrument Panel Air Manifold

(1) Install nipple (15, Figure 2-65, Sheet 1 of 2) in left instrument panel air manifold (8).

(2) Install pressure protection valve (14) on nipple (15).

(3) Install two straight fittings (12 and 13) in left instrument panel air manifold (8).

(4) Install two 90° elbows (10 and 11) in left instrument panel air manifold (8) and pressure protection valve (14) respectively.

(5) Install four plugs (9) in left instrument panel air manifold (8). Tighten plugs (9) securely.

(6) Install left instrument panel air manifold (8) on mounting plate (16).

(7) Install two capscrews (7), new lockwashers (6), and nuts (5) in left instrument panel air manifold (8) and mounting plate (16). Tighten nuts (5) securely.

(8) Connect two air lines (2 and 3) to straight fittings (12 and 13) respectively. Tighten air lines (2 and 3) securely.

(9) Connect two air lines (1 and 4) to 90° elbows (10 and 11) respectively. Tighten air lines (1 and 4) securely.

2-411. THROTTLE TREADLE VALVE

NOTE

Install related air lines, hoses, nylon ties, and clamps as noted before removal.

Coat threads of all elbows and straight fittings with Pipe Sealant, Loctite 592 or equivalent.

Install all elbows, nipples, and straight fittings as noted before removal.

The air lines and connections may be checked after the entire air system is completely assembled. This will be done by pressurizing the air system, to a point equivalent to normal operating air pressure, and applying a water and soap solution to lines, fittings, and connections to check for leaks. A soft-bristled brush may be needed to apply the solution. Use soap NSN 8520-00-634-0335 or equivalent.

a. Install two straight fittings (12 and 13, Figure 2-64) in throttle treadle valve (4).

NOTE

Ensure notch (14) in mounting plate (3) is installed in position shown.

b. Install throttle treadle valve (4) on mounting plate (3) using three capscrews (9), new lockwashers (10), and nuts (11). Tighten nuts (11) securely.

c. Position throttle treadle valve (4) on vehicle and connect two air lines (5 and 6) to straight fittings (13 and 12) respectively. Tighten line nuts (7 and 8) securely.

d. Install throttle treadle valve (4) and mounting plate (3) using four new lockwashers (2) and capscrews (1). Tighten capscrews (1) securely.

2-412. BRAKE TREADLE VALVE

NOTE

Install related air lines, hoses, nylon ties, and clamps as noted before removal.

Coat threads of all elbows and straight fittings with Pipe Sealant, Loctite 592 or equivalent.

Install all elbows, nipples, and straight fittings as noted before removal.

NOTE

The air lines and connections may be checked after the entire air system is completely assembled. This will be done by pressurizing the air system, to a point equivalent to normal operating air pressure, and applying a water and soap solution to lines, fittings, and connections to check for leaks. A soft-bristled brush may be needed to apply the solution. Use soap NSN 8520-00-634-0335 or equivalent.

Fittings and air lines are allowed a one inch bubble in three seconds.

a. Install brake treadle valve (10, Figure 2-63) on mounting plate (9).

b. Install three new lockwashers (13) and capscrews (14) in mounting plate (9) and brake treadle valve (10). Tighten capscrews (14) securely.

c. Install two plugs (12) in brake treadle valve (10). Tighten plugs (12) securely.

d. Install two 90° elbows (11) in side of brake treadle valve (10).

e. Install two air lines (4 and 5) to 90° elbows (11). Tighten air lines (4 and 5) securely.

f. Install four 90° elbows (15, 16, 19, and 22) in rear of brake treadle valve (10) as shown.

g. Connect four air lines (17, 18, 20, and 21) to 90° elbows (15, 16, 19, and 22) respectively. Tighten air lines (17, 18, 20, and 21) securely.

h. Loosely install two washers (1), new lockwashers (2), and capscrews (3) in vehicle. Do not tighten at this time.

i. Position mounting plate (9) in vehicle so slots engage capscrews (3).

j. Install two capscrews (7), new lockwashers (6), and nuts (8) in bottom of mounting plate (9). Tighten nuts (8) and capscrews (3) securely.

k. Install two stop light switches in brake treadle valve (10). Refer to Paragraph 2-414 in this manual for installation of stop light switches.

2-413. LOW AIR PRESSURE SWITCHES

WARNING

To prevent personal injury, ensure batteries are disconnected and do not wear watches, rings, and other jewelry when working on electrical components.

NOTE

Coat threads (4, Figure 2-62) of low air pressure switch with Pipe Sealant, Loctite 592 or equivalent.

This procedure works for both low air pressure switches.

a. Install low air pressure switch (2) in brake treadle valve (3). Tighten low air pressure switch (2) securely.

b. Connect wire (1) to low air pressure switch (2). Ensure wire (1) is connected properly.

2-414. STOP LIGHT SWITCHES

WARNING

To prevent personal injury, ensure batteries are disconnected and do not wear watches, rings, and other jewelry when working on electrical components.

NOTE

Coat threads of low air pressure switches with Pipe Sealant, Loctite 592 or equivalent.

This procedure will work for stop light switches (1, 2, 3, or 4, Figure 2-61) on brake treadle valve (5), hand control valve (6), and quick release valve (7).

a. Install stop light switch (1, 2, 3, or 4) in position by turning clockwise until tight.

b. Install two washers (10), wires (9), and nuts (8) on stop light switch (1, 2, 3, or 4). Tighten nuts (8) securely.

2-415. CAB 90° GEAR BOX

a. Position cab 90° gear box (4, Figure 2-60) on mounting bracket (3).

b. Install four new lockwashers (2) and capscrews (1) in mounting bracket (3) and cab 90° gear box (4). Tighten capscrews (1) securely.

2-416. STEERING LINKAGE AND UNIVERSAL JOINT

NOTE

This procedure works for all steering linkages and universal joints.

a. Install carrier bearing (13, Figure 2-59) on steering linkage (14).

b. Install two keys (5) in steering linkage (14). Ensure keys (5) are fully seated in steering linkage (14).

c. Install steering linkage (14) and carrier bearing (13) in end yokes (3).

d. Install three new lockwashers (11), capscrews (10), and nuts (9) in carrier bearing support (12). Tighten nuts (9) securely.

e. Install universal joint (8) and four bearing caps (7) in end yoke (3).

f. Install four snaprings (6) in end yoke (3). Ensure snaprings (6) are fully seated.

NOTE

Cab 90° gear box or frame 90° gear box may have to be loosened to allow installation of steering linkage and universal joint.

g. Spread slotted end of end yoke (3) slightly and slide over shaft of cab 90° gear box or over shaft of frame 90° gear box.

h. Install clamping capscrew (1) and nut (2) in end yoke (3). Tighten nut (2) securely.

2-417. STEERING COLUMN

a. Insert steering column spline (12, Figure 2-58) in end yoke (5).

b. Secure steering column (2) to steering column brace (10) with caps (9), two pads (11), two capscrews (6), new lockwashers (7), and nuts (8). Tighten nuts (8) securely.

c. Install clamping capscrew (3) and new locknut (4) in end yoke (5). Tighten locknut (4) securely.

d. Connect horn wire (1) to quick disconnect (13). Ensure wire (1) is connected properly.

2-418. TURN SIGNAL SWITCH AND FLASHER

WARNING

To prevent personal injury, ensure batteries are disconnected and do not wear watches, rings, and other jewelry when working on electrical components.

a. Position turn signal switch (10, Figure 2-57) on steering column (4).

b. Tighten clamp (9) securely.

c. Install clamp (3) on wires (11) using capscrew (5), new lockwasher (2), and nut (1). Tighten nut (1) securely.

d. Connect five wires (11) from turn signal switch (10) to harness wires. Ensure wires (11) are connected properly and as noted before removal.

e. Connect wire (6) where it was cut before removal using butt connectors. Ensure wire (6) is connected properly.

f. Install nylon ties as noted before removal.

g. Install flasher (8) in flasher plug (7). Ensure flasher (8) is installed properly in flasher plug (7).

2-418.1. TURN SIGNAL SWITCH AND FLASHER (LVSA1 SERIES VEHICLES ONLY).

a. Connect signal connector (8, Figure 2-57.1) into turn signal switch assembly (9).

b. Position turn signal switch assembly (9) and pads (12) on steering column (13). Connect clamp (11) and tighten clamp screw (10) securely.

c. Install flasher (4) using two capscrews (2) and new locknuts (1). Tighten locknuts (1) securely.

d. Route harness (16) as noted during removal. Connect weather pack terminal (17).

e. Secure harness (16) on steering column (13) using wire clamp (15) and nut (14). Tighten nut (14) securely.

NOTE

Install additional terminals as necessary in noted locations.

f. Install new lockwasher (7), terminal (6), and nut (5). Apply corrosion preventive compound at terminal (6).

g. Connect flasher connector (3) into flasher (4).

h. Install nylon ties as necessary at locations noted during removal.

2-419. HEADLIGHT SHIELDS

a. Left Headlight Shield

WARNING

To prevent personal injury, ensure batteries are disconnected and do not wear watches, rings, and other jewelry when working on electrical components.

NOTE

Install related wires, nylon ties, and clamps as noted before removal.

(1) New-Style Turn Signal Flasher

(a) Position left headlight shield (2, Figure 2-56) under dash panel (12).

(b) Install capscrew (5), new-style turn signal flasher (4), ground wire (6) and new locknut (3) on left headlight shield (2). Tighten locknut (3) securely.

(c) Install three screws (1) in left headlight shield (2). Tighten screws (1) securely.

(2) Old-Style Turn Signal Flasher

WARNING

To prevent personal injury, ensure batteries are disconnected and do not wear watches, rings, and other jewelry when working on electrical components.

NOTE

Install related wires, nylon ties, and clamps as noted before removal.

(a) Position left headlight shield (2) under dash panel (12).

(b) Install old-style turn in signal flasher (11) in clip (9) on left headlight shield (2). Ensure old-style turn signal flasher is in clip (9) securely.

(c) Install four screws (1) in left headlight shield (2). Tighten screws (1) securely.

b Right Headlight Shield

(1) Position right headlight shield (8) under dash panel (12).

(2) Install four screws (7) in right headlight shield (8). Tighten screws (7) securely.

2-420. STEERING WHEEL

a. Install contact plate (11, Figure 2-55) on bottom side of steering wheel (8) using two screws (10). Tighten screws (10) securely.

b. Position steering wheel (8) over steering column (9) aligned in straight ahead position.

c. Install steering wheel (8) on steering column (9).

d. Install nut (7) on steering column shaft (12). Tighten nut (7) securely.

e. Install base plate (6) using two short screws (4) and long screw (5). Tighten screws (4 and 5) securely.

f. Install spring (3), cup (2), and horn button (1) on contact plate (6).

g. Depress horn button (1) and turn clockwise until it locks in place.

h. Press horn button (1) several times to ensure proper operation.

2-421. TRANSMISSION OIL FILTER MOUNTING BRACKET, ADAPTER, AND OIL FILTER

NOTE

Install related transmission oil lines, hoses, nylon ties, and clamps as noted before removal.

a. Transmission Oil Filter Mounting Bracket

(1) Install transmission oil filter mounting bracket (9, Figure 2-54) on right fender (5).

(2) Install new lockwasher (4), ground wire (3), capscrew (2), new lockwasher (6), and nut (7) in transmission oil filter mounting bracket (9) and fender (5).

(3) Install three capscrews (2), new lockwashers (6), and nuts (7) in remaining holes in transmission oil filter mounting bracket (9). Tighten nuts (7) securely.

b. Transmission Oil Filter Adapter

(1) Install new O-ring on adapter (10A) and nut, washer, and new O-ring on boss adapter (10B).

(2) Install adapter (10A) and boss adapter (10B) in transmission oil filter adapter (11). Tighten adapter (10A) securely. Position boss adapter (10B) as noted before removal; do not tighten at this time.

(3) Install transmission oil filter adapter (11) on transmission oil filter mounting bracket (9) using four capscrews (1), new lockwashers (13), and nuts (12). Tighten nuts (12) securely.

(4) Connect two oil lines (10) to adapter (10A) and boss adapter (10B) as noted before removal. Tighten oil lines (10) and boss adapter (10B) nut (not shown) securely.

c. Transmission Oil Filter

(1) Coat new transmission oil filter seal (14) with light coat of oil before installing. Use oil conforming to MIL-L-2104.

CAUTION

To prevent leaks, transmission oil filter (8) must be tightened one full turn after contacting transmission oil filter adapter (11). Disregard any conflicting instructions printed on replacement transmission oil filter (8).

(2) Install transmission oil filter (8) on transmission oil filter adapter (11) by turning clockwise until transmission oil filter seal (14) contacts surface of transmission oil filter adapter (11).

(3) Tighten transmission oil filter (8) one full turn after transmission oil filter seal (14) contacts surface of transmission oil filter adapter (11).

2-422. STEERING SELECTOR SWITCH AND VALVE

WARNING

To prevent personal injury, ensure batteries are disconnected and do not wear watches, rings, and other jewelry when working on electrical components.

NOTE

Install related hydraulic lines, hoses, nylon ties, and clamps as noted before removal.

a. Install bracket (14, Figure 2-53) on steering selector valve (8) using washer (13), new lockwasher (12), and capscrew (11). Tighten capscrew (11) securely.

b. Install nuts (21 and 22) on steering selector switch (20) as noted before removal.

c. Install steering selector switch (20) on steering selector valve (8) using two nuts (18 and 19). Do not tighten nuts (18 and 19) at this time. Refer to TM 2320-20/12 for adjustment of steering selector valve (8).

d. Position steering selector valve (8) on right fender (7) and install three washers (10), capscrews (9), new lockwashers (6), and nuts (5) in steering selector valve (8). Tighten nuts (5) securely.

e. Connect four hydraulic lines (1 through 4) to steering selector valve (8). Tighten hydraulic lines (1 through 4) securely.

2-423. DIRECTIONAL RELIEF VALVE

WARNING

To prevent personal injury, ensure batteries are disconnected and do not wear watches, rings, and other jewelry when working on electrical components.

NOTE

Install related wires, hydraulic lines, hoses, nylon ties, and clamps as noted before removal.

a. Install new O-rings (14, Figure 2-52) on 90° elbow (13).

b. Install 90° elbow (13) in directional relief valve (9) as noted before removal.

c. Install new O-ring (12) on adapter (11.2) and install adapter (11.2) in directional relief valve as noted before removal.

c.1. Install filter screen (11.1)

d. Install tee fitting (11) on adapter (11.2) as noted before removal.

e. Position plate (10) and directional relief valve (9) on mounting surface (15).

f. Install two capscrews (8), new lockwashers (7), and nuts (6) in directional relief valve (9) and mounting surface (15). Tighten nuts (6) securely.

g. Connect plug (5) and snap keeper (4) on plug (5). Ensure plug (5) is connected properly.

NOTE

Perform step (g.1) on LVSA1 series vehicles only.

g.1. Install new gasket (5.3) on connector (5.2) and tighten screw (5.1).

h Connect three hydraulic lines (1, 2, and 3) to tee fitting (11) and 90° elbow (3) respectively. Tighten hydraulic lines (1, 2, and 3) securely.

2-424. HYDRAULIC OIL RESERVOIR

WARNING

To prevent personal injury, ensure batteries are disconnected and do not wear watches, rings, and other jewelry when working on electrical components.

The hydraulic oil reservoir is very heavy. To prevent personal injury, use lifting device to install hydraulic oil reservoir on vehicle. Direct personnel to stand clear of hydraulic oil reservoir during installation procedures.

NOTE

Install related wires, hydraulic lines, hoses, nylon ties, and clamps as noted before removal.

a. Apply Pipe Sealant, Loctite 592 or equivalent to threads on two elbows (17 and 18, Figure 2-51) and install in hydraulic oil reservoir (5) as noted before removal.

NOTE

Help from assistant(s) may be necessary to guide hydraulic oil reservoir into position.

b. Position hydraulic oil reservoir (5) on vehicle using an overhead lifting device.

NOTE

It will be necessary for assistant working through access opening in cab to position wrench while mechanic working between cab and hydraulic oil reservoir turns wrench to install hydraulic oil supply line.

c. Connect hydraulic oil supply line (15) to adapter (16).

d. Install hydraulic oil supply line (15) and adapter (16) to hydraulic oil supply line elbow (17). Tighten adapter (16) and hydraulic oil supply line (15) securely.

e. Coat threads of sending unit (22) with Pipe Sealant, Loctite 592 or equivalent.

f. Install sending unit (22) in hydraulic oil reservoir (5). Tighten sending unit (22) securely.

g. Connect wire (21) with new lockwasher (20) and nut (19). Tighten nut (19) securely.

CAUTION

To prevent damage to sending unit (9), do not tighten it over 15 ft-lb (20.34 N.m).

h. Install sending unit (9) in hydraulic oil reservoir (5). Torque sending unit (9) to 15 ft-lb (20.34 N.m).

i. Connect plug (8). Ensure plug (8) is connected properly.

j. Place engine oil fill tube (14) in position.

k. Secure hydraulic oil reservoir (5), engine oil fill tube (14), and ground wire (13) using four capscrews (10), new lockwashers (12), and nuts (11). Tighten nuts (11) securely.

l. Connect hydraulic line (6) to 90° elbow (18). Tighten hydraulic line (6) securely.

m. Install hydraulic oil manifold (4) on hydraulic oil reservoir (5) using two capscrews (1), new lockwashers (3), and nuts (2). Tighten nuts (2) securely.

2-425. HYDRAULIC OIL LEVEL GAUGE AND OIL FILTER HOUSING

a. Hydraulic Oil Level Gauge

NOTE

It will be necessary to use access plate hole to secure hydraulic oil level gauge nuts.

(1) Position hydraulic oil level gauge (14, Figure 2-50) with two new O-rings (13) on hydraulic oil reservoir (10).

(2) Secure hydraulic oil level gauge (14) using two nuts (12). Tighten nuts (12) securely.

(3) Install gasket (15) on hydraulic oil reservoir (10).

(4) Position access plate (16) so filter neck (18) is on hydraulic oil level gauge (14) side of hydraulic oil reservoir (10).

(5) Install 12 new self-locking nuts (17) on hydraulic oil reservoir (10). Tighten self-locking nuts (17) securely.

b. Hydraulic Oil Filter Housing

NOTE

Install related hydraulic lines, hoses, nylon ties, and clamps as noted before removal.

(1) Position new gasket (11) on hydraulic oil reservoir (10).

(2) Install hydraulic oil filter housing (1) in hydraulic oil reservoir (10) as noted before removal.

(3) Install four new lockwashers (9) and nuts (8) on hydraulic oil reservoir (10). Tighten nuts (8) securely.

(4) Install two new O-rings (6 and 7) on adapters (4 and 5).

(5) Install two adapters (4 and 5) in hydraulic oil filter housing (1). Tighten adapters (4 and 5) securely.

(6) Connect two hydraulic lines (2 and 3) to adapters (4 and 5) respectively. Tighten hydraulic lines (2 and 3) securely.

2-426. AIR DRYER MOUNTING BRACKET, AIR DRYER, AND ETHER BOTTLE

a. Air Dryer Mounting Bracket

(1) Install air dryer mounting bracket, (1, figure 2-49) on left fender.

(2) Install four capscrews (4) and new locknuts (3). Tighten locknuts (3) securely.

b. Air Dryer

(1) Install wire (14, Figure 2-48) on air dryer (9) using new lockwasher (13) and nut (12). Tighten nut (12) securely.

(2) Slide boot (10) down over nut (12), lockwasher (13), and end of wire (14). Ensure boot (10) is securely in place.

(3) Install air dryer (9) in position on air dryer mounting bracket (15).

(4) Install four capscrews (7) and new locknuts (4). Tighten locknuts (4) securely. ■

(5) Connect three air lines (1, 2, and 3) to air dryer (9) as noted before removal. Tighten air lines (1, 2, and 3) securely.

c. Ether Bottle

NOTE

Follow steps (1 through 3) if atomizer and tube are being replaced.

Install ties on tube as noted before removal.

(1) Install atomizer (22, Figure 2-47) on blower inlet housing (24). Tighten atomizer (22) securely.

(2) Install tube (7) on vehicle.

(3) Connect tube (7) to atomizer (22). Tighten tube nut (23) securely.

(4) Install studs (19) in air dryer mounting bracket (17) using two new lockwashers (16) and nuts (15).

(5) Install bracket (18) on studs (19) using two new lockwashers (21) and nuts (20). Tighten nuts (15 and 20) securely.

(6) Install bracket (14) on air dryer mounting bracket (17) using two capscrews (11), new lockwashers (13), and nuts (12). Tighten nuts (12) securely.

(7) Install ether start aid valve assembly (8), clamp (10), and two capscrews (9) on bracket (14). Tighten capscrews (9) securely.

(8) Install tube (7) on fitting (6) on ether start aid valve assembly (8). Tighten tube (7) securely.

(9) Connect plug (5). Ensure plug (5) is connected properly.

WARNING

The ether bottle is pressurized. To prevent personal injury, wear eye protection and keep face clear of ether bottle during installation procedures.

(10) Screw new ether bottle (3) on ether start aid valve assembly (8). Ensure ether bottle (3) is installed properly.

(11) Install clamp (2) on studs (19) and ether bottle (3) and secure with two wing nuts (1). Tighten wing nuts (1) securely.

2-427. STARTER RELAY

WARNING

To prevent personal injury, ensure batteries are disconnected and do not wear watches, rings, and other jewelry when working on electrical components.

NOTE

Install related wires, nylon ties, and clamps as noted before removal.

a. Install starter relay (4, Figure 2-46) and wire (3) on mounting surface (14).

b. Install washer (13), capscrew (12), new lockwasher (11), and nut (9) in upper hole of starter relay (4).

c. Install remaining capscrew (12) through one end of wire (3) and starter relay (4) and install new star washer (10) and nut (9) on capscrew (12). Tighten nuts (9) securely.

d. Install three wires (6, 7, and 8) and two nuts (5) on starter relay (4). Tighten nuts (5) securely.

e. Install remaining end of wire (3) and nut (1) on starter relay (4). Tighten nut (1) securely.

2-428. CIRCUIT BREAKER AND ALTERNATOR DIODE

WARNING

To prevent personal injury, ensure batteries are disconnected and do not wear watches, rings, and other jewelry when working on electrical components.

NOTE

Install related wires, hoses, nylon ties, and clamps as noted before removal.

a. Circuit Breaker

(1) Install circuit breaker (15, Figure 2-45) on mounting plate (16) using two capscrews (14) and new locknuts (12). Tighten locknuts (12) securely.

(2) Install three wires (3, 10, and 11) on circuit breaker (15) using two new lockwashers (9) and capscrews (8). Tighten capscrews (8) securely.

a. Alternator Diode

(1) Install alternator diode (4) in mounting plate (16).

(2) Install washer (7), new star washer (6), and nut () on alternator diode (4). Tighten nut (1) securely.

(3) Install wire (3), new star washer (2), and nut (1) on alternator diode (4). Tighten nut (1) securely.

2-429. AIR CLEANER INTAKE DUCTING

a. Install air cleaner intake ducting (7, Figure 2-44) on turbocharger (6).

b. Install clamp (5) on turbocharger (6) and air cleaner intake ducting (7). Tighten clamp (5) securely.

c. Install fitting (3) in air cleaner intake ducting (7). Tighten fitting (3) securely.

d. Install hose (4) on fitting (3). Tighten hose (4) securely.

e. Install clamp (1) on hose (2).

f. Install hose (2) and clamp (1) on air cleaner intake ducting (7). Tighten clamp (2) securely.

2-430. AIR CLEANER ASSEMBLY

WARNING

The air cleaner assembly is very heavy. To prevent personal injury, use a sling and an overhead lifting device to install air cleaner assembly on vehicle.

To prevent personal injury, direct personnel to stay clear of air cleaner assembly during installation procedures.

NOTE

Install related wires, hoses, nylon ties, and clamps as noted before removal.

a. Install bracket (10.4, Figure 2-43), two capscrews (10.2), washers (10.3), and new locknuts (10.1). Tighten capscrews (10.2) and locknuts (10.1) securely.

b. Coat elbows (31) with pipe sealant and install. Tighten securely.

c. Install check valve assembly (5) and two clamps (29 and 30) securely. Tighten clamps (29 and 30) securely.

d. Aline air cleaner (19) with holes in brackets (22) and install four capscrews (20), and new locknuts (21). Tighten capscrews (20) and new locknuts (21) securely.

e. Install hose (28) and clamp (26) at air inlet housing (27). Tighten clamp (26) securely.

f. Install bracket (18), two capscrews (16), and nuts (17) at the third hole from the end of air cleaner (19). Tighten capscrews (16) securely.

g. Position clamp (25) and install capscrew (23), and nut (24). Tighten capscrew (23) and nut (24) securely.

h. Install hanger (15), capscrew (13), and locknut (14). Tighten capscrew (13) and locknut (14) securely.

i. Install two capscrews (12) and new locknuts (11). Tighten locknuts (11) securely.

j. Install worklight (9), bracket (10), two capscrews (6), and new locknuts (8). Tighten locknuts (8) securely.

NOTE

Performs steps k and l on LVSA1 series vehicles only.

k. Install weatherhood (5.2) using two capscrews (5.4) and new locknuts (5.3). Tighten locknuts (5.3) securely.

l. Install four capscrews (5.1) in right, left, and rear sides of weatherhood (5.2). Tighten capscrews (5.1) securely.

m. Install hose (4) and clamp (3) on check valve assembly (5). Tighten clamp (3) securely.

n. Install air inlet duct (2) on air cleaner (9) and tighten clamp (1).

2-431. GRAB HANDLE - LEFT FENDER

a. Install plugs (3 or 3.1, Figure 2-42) in grab handle (7 or 7.1).

b. Place grab handle (7 or 7.1) on left fender (6) and align mounting holes.

c. Install two capscrews (4) in lower end of grab handle (7) and position plate (5) on underside of left fender (6) and install washers (2) and new locknuts (1) on capscrews (4). Tighten locknuts (1) securely.

NOTE

Perform step (c.1.) on LVSA1 series vehicles only.

c.1. Install two capscrews (4.1) in lower end of grab handle (7.1) and install new locknuts (1.1) on capscrews (4.1). Tighten locknuts (1.1) securely.

d. Install two capscrews (4), washers (2), and new locknuts (1) in upper end of grab handle (7) and mounting surface (8). Tighten locknuts (1) securely.

NOTE

Perform step (d.1.) on LVSA1 series vehicles only.

d.1. Install two capscrews (4.1), washers (2.1) and new locknuts (1.1) in upper end of grab handle (7.1) and mounting surface (8). Tighten locknuts (1.1) securely.

2-432. MAIN AIR RESERVOIRS

WARNING

The main air reservoirs are heavy and awkward to handle. To prevent personal injury, use an overhead lifting device or help from an assistant to install main air reservoirs.

NOTE

Install related hoses, lines, nylon ties, and clamps as noted before removal.

Main air reservoirs will be installed on fan mount/radiator support before fan mount/radiator support is installed on vehicle.

This procedure works for both main air reservoirs.

a. Install front bracket (13, Figure 2-41) on fan mount/radiator support (17) using two capscrews (14) and locknuts (11). Tighten locknuts (11) securely.

b. Install rear bracket (1) on fan mount/radiator support (17) using two capscrews (2), new lockwashers (16), and nuts (15). Tighten nuts (15) securely.

c. Install two main air reservoir mounting brackets (6) on rear bracket (1) using two capscrews (3) and locknuts (5). Tighten locknuts (5) securely. Repeat for front bracket (13).

d. Spread main air reservoir mounting brackets (6) apart.

e. Install right main air reservoir (7) by placing it in main air reservoir brackets (6) and sliding towards front side of fan mount/radiator support (17).

f. Install two capscrews (10), new lockwashers (9), and nuts (8) in main air reservoir mounting brackets (6). Tighten nuts (8) securely. Repeat steps e and f for left main air reservoir (18).

2-433. QUICK DISCONNECT FITTING

NOTE

Apply Pipe Sealant, Loctite 592 or equivalent to hex nipple to prevent leakage.

a. Install hex nipple (1, Figure 2-40) into tee (3). Tighten hex nipple (1) securely.

b. Install quick disconnect fitting (2) onto hex nipple (1).

c. Tighten quick disconnect fitting (2) while holding hex nipple (1) tightly with proper size wrench.

2-434. FAN MOTOR AND FAN

a. Fan Motor

WARNING

The fan motor is very heavy. To prevent personal injury, support fan motor before installation procedures with lifting device or help from assistant(s).

NOTE

Fan motor will be installed on fan mount/radiator support before fan mount/radiator support is installed on vehicle.

(1) Place fan motor (4, Figure 2-39) in position on fan mount/radiator support (3) and align mounting holes.

(2) Install four washers (2), capscrews (1), new lockwashers (6), and nuts (5) in fan mount/radiator support (3) and fan motor (4). Tighten nuts (5) securely.

b. Fan

(1) Install woodruff key (9, Figure 2-38) in fan motor shaft (10).

(2) Align keyway in fan hub (7) with woodruff key on fan motor shaft (10).

(3) Install fan hub (7) on fan motor shaft (10) with long side of fan hub (7) facing fan motor (8).

(4) Position fan (6) on fan hub (7) and align mounting holes.

(5) Install six new lockwashers (5) and capscrews (4) in fan (6) and fan hub (7). Torque capscrews (4) to 95 ft-lb (128.14 N.m).

(6) Install washer (3) and castellated nut (2) on fan motor shaft (10). Tighten nut (2) securely and align hole in fan motor shaft (10) with slot in castellated nut (2).

(7) Install new cotter pin (1) in castellated nut (2) and fan motor shaft (10). Bend end of cotter pin (1) down over castellated nut (2) to secure cotter pin (1).

2-435. FAN MOUNT/RADIATOR SUPPORT

WARNING

The fan mount/radiator support is very heavy. To prevent personal injury, use an overhead lifting device to install fan mount/radiator support on vehicle.

NOTE

Fan mount/radiator support will be installed with main air reservoirs, fan motor, and fan already installed on fan mount/radiator support. Refer to Paragraph 2-432 for installation of main air reservoirs and Paragraph 2-434 for installation of fan motor and fan.

Install related air and hydraulic hoses, lines, nylon ties, and clamps as noted before removal.

a. Position fan mount/radiator support (9, Figure 2-37), with main air reservoirs (6 and 19), fan motor (11), and fan (23) installed, on vehicle.

b. Install 16 flanged capscrews (10) in fan mount/radiator support (9) and mounting brackets (24). Tighten flanged capscrews (10) securely.

c. Install new O-ring (13), hydraulic line (17), two flange halves (16), four new lockwashers (15), and capscrews (14) on fan motor (11). Tighten capscrews (14) securely.

d. Install new O-ring (13), hydraulic line (12), two flange halves (16), four new lockwashers (15), and capscrews (14) on fan motor (11). Tighten capscrews (14) securely.

e. Connect two air lines (21 and 22) to front of left main air reservoir (19). Tighten air lines (21 and 22) securely.

f. Connect air line (20) to fender side of left main air reservoir (19). Tighten air line (20) securely.

g. Connect air line (18) to rear of left main air reservoir (19). Tighten air line (18) securely.

h. Connect two air lines (7 and 8) to front of right main air reservoir (6). Tighten air lines (7 and 8) securely.

NOTE

Perform step (3.1) on LVSA1 series vehicles only.

(3.1) Install vent valve (17.2) and vent line (17.1). Tighten securely.

(4) Install hoses (6, 10, and 12) as noted before removal and tighten hose nuts (5, 7, and 13) respectively and securely.

NOTE

Fuel tank lines and fittings for LVSA1 series vehicles have changed to a larger diameter for improved fuel flow. Fittings have changed to brass, and parts are not interchangeable between old and new vehicles. Assembly steps are the same for old and new vehicles, except that the nipple (9.2) is not required on LVSA1 series vehicles. Refer to TM 9-2320-297-24P for correct parts identification.

(4.1) Install nipple (9.2), valve (9.1), and adapter (9) on valve (18). Tighten securely.

(5) Connect crossover hose (20) to adapter (9). Tighten securely.

NOTE

Perform steps (5.1 and 5.2) on LVSA1 series vehicles only.

(5.1) Install grab handle (21), new lockwasher (23) and capscrew (22) on vehicle. Tighten capscrew (22) securely.

(5.2) Install two capscrews (20) and new locknuts (19). Tighten locknuts (19) securely.

b. Left Fuel Tank

(1) Position left fuel tank (14, Figure 2-34) on left fender (6), using an overhead lifting device, in location noted before removal.

(2) Install two hold-down strap liners (12) and hold-down straps (13) by inserting lower end of hold-down straps (13) in holes in left fender (6) and securing with new locknuts (11). Insert upper end of hold-down straps (13) in holes in fan mount/radiator support (2) and secure with locknuts (1). Tighten locknuts (1 and 11) securely.

(3) Install adapter (16), check valve (15), and hose (17) in left fuel tank (18). Tighten each securely.

(4) Install nipple (10), elbow (9), nipple (8), valve (7), and 45° elbow (5) in left fuel tank (14). Tighten nipple (10), elbow (9), nipple (8), valve (7), and 45° elbow (5) securely.

(5) Connect crossover hose (4) to 45° elbow. Tighten hose nut (3) securely.

NOTE

Perform steps (5.1 thru 5.3) on LVSA1 series vehicles only.

(5.1) Install grab handle (20), new lockwasher (22) and capscrew (21) on vehicle. Tighten capscrew (21) securely.

(5.2) Install plug (23) into ends of grab handle (20).

(5.3) Install two capscrews (19) and new locknuts (18). Tighten locknuts (18) securely.

2-438. FITTINGS, CHECK VALVES, VENT LINES, AND FUEL LINES

CAUTION

To prevent personal injury and possible damage to parts, use proper size wrench when installing fuel lines, vent lines, check valves, and fittings.

NOTE

Install related hoses, lines, nylon ties, and clamps as noted before.

Apply Pipe Sealant, Loctite 592 or equivalent to adapters and fittings to prevent leakage.

a. Install fittings (2, Figure 2-33) as noted before removal. Tighten fittings (2) securely.

b. Install check valves (3) as noted before removal. Tighten check valves (3) securely.

c. Install vent lines (4) as noted before removal. Tighten vent lines (4) securely.

NOTE

Perform step c.1 on LVSA1 series vehicles only.

c.1. Install vent valves (4.2) and vent lines (4.1) as noted before removal.

d. Install fuel lines (1) as noted before removal. Tighten fuel lines (1) securely.

2-439. FAN SHROUD AND RADIATOR

a. Fan Shroud

(1) Support radiator (4, Figure 2-32) on wooden blocks with filler neck facing down.

(2) Position fan shroud (11) on radiator (4) and align mounting holes.

(3) Install six clips (5), new lockwashers (6), nuts (7), two new lockwashers (16), and capscrews (17) in fan shroud (11) and radiator (4). Tighten nuts (7) and capscrews (17) securely.

NOTE

To ensure proper installation, install rear and front radiator mounting brackets (12 and 24) as marked before removal.

(4) Install two rear radiator mounting brackets (12), washers (18), new lockwashers (19), and capscrews (20) on fan shroud (11). Tighten capscrews (20) securely.

(5) Install two front radiator mounting brackets (24), washers (23), new lockwashers (22), and capscrews (21) on fan shroud (11). Tighten capscrews (21) securely.

(6) Install four upper mounting biscuits (14) on rear and front radiator mounting brackets (12 and 24).

(7) Install bracket (10) on radiator (4) using new lockwasher (9) and nut (8). Tighten nut (8) securely.

(8) Install two rubber flaps (25) on top of radiator (4) using six washers (3), new lockwashers (2), and capscrews (1), two new lockwashers (15), and nuts (13). Tighten nuts (13) securely.

b. Radiator

WARNING

The radiator is very heavy and awkward to handle. To prevent personal injury, use an overhead lifting device to install radiator on vehicle. Help from assistant(s) may be necessary to guide radiator during installation procedures.

CAUTION

Be extremely careful not to damage cooling fins when installing radiator.

(1) Position radiator (1, Figure 2-31), using an overhead lifting device, on fan mount/radiator support (2).

(2) Install four lower mounting biscuits (3), washers (4) and new locknuts (5) on radiator (1). Torque locknuts (5) to 199 ft-lb (256.28 N.m).

2-440. COOLING SYSTEM HOSES AND TUBES

a. Lower Radiator Hoses and Tubes

(1) Install two hoses clamps (14, Figure 2-29) on hose (15) and two hose clamps (7) on hose (8).

(2) Slide two hoses (15 and 8) on upper and lower ends of tube (16) respectively.

(3) Install tube (16) by sliding hose (15) on water pump (17).

(4) Install tube (9) by sliding hose (8) to rear.

(5) Install three clamps (11) on tube (9) using three new lockwashers (13) and capscrews (12). Tighten capscrews (12) securely.

(6) Install two hose clamps (5) on elbow (6) and two hose clamps (1) on hose (2).

(7) Slide elbow (6) and hose (2) on tube (3).

(8) Install tube (3) by sliding elbow (6) on tube (9) and by sliding hose (2) on radiator (4).

(9) Install nylon ties (10) where noted before removal and tighten eight hose clamps (1, 5, 7, and 14) to 100 inch-pounds (11 N·m).

b. Upper Radiator Hoses and Tubes

(1) Install overflow hose (26, Figure 2-30) on overflow tube (27).

(2) Install one end of by-pass hose (22) on 45° elbow (24). Tighten by-pass hose (22) securely.

(3) Install remaining end of by-pass hose (22) on 90° elbow (29). Tighten by-pass hose (22) securely.

(4) Install two hose clamps (28) on hose (21).

(5) Install one end of hose (21) on radiator (25) and the other end of hose (21) to drain valve (30). Tighten clamps (28) securely.

(6) Install two hose clamps (19) on hose (18) and two hose clamps (12) on elbow (15).

(7) Slide elbow (15) and hose (18) on right tube (20).

(8) Install right tube (20) by sliding hose (18) on radiator (25) and elbow (15) on right thermostat housing (17).

(9) Install clamp (1) using two new lockwashers (2) and nuts (3). Tighten nuts (3) securely.

(10) Install two hose clamps (13) on elbow (14) and two hose clamps (8) on hose (9).

(11) Slide hose (9) and elbow (14) on left tube (10).

(12) Install left tube (10) by sliding hose (9) on radiator (25) and elbow (14) on left thermostat housing (16).

(13) Install clamp (4) on bracket (5) using two new lockwashers (6) and nuts (7). Tighten nuts (7) securely.

(14) Install nylon ties (11) where noted before removal and tighten eight hose clamps (8, 12, 13, and 19) to 100 inch-pounds (11 N·m).

2-441. TRANSMISSION OIL COOLER

WARNING

The transmission oil cooler is very heavy and awkward to handle. To prevent personal injury, use an overhead lifting device to install transmission oil cooler on vehicle. Help from assistant(s) may be necessary to guide transmission oil cooler during installation procedures.

CAUTION

Be extremely careful not to damage cooling fins when installing transmission oil cooler.

NOTE

Refer to paragraph 2-443 in this manual for installation of hydraulic hoses and fittings.

a. Install transmission oil cooler (7, Figure 2-28) on top of radiator (8).

b. Install six washers (5), new lockwashers (4), and capscrews (3) in transmission oil cooler (7) and radiator (8). Tighten capscrews (3) securely.

c. Apply Pipe Sealant, Loctite 592 or equivalent to 90° elbow (2) and straight fitting (6).

d. Install 90° elbow (2) and straight fitting (6) as noted before removal.

e. Connect two transmission oil lines (1) to 90° elbow (2) and straight fitting (6). Tighten transmission oil lines (1) securely.

2-442. HYDRAULIC OIL COOLER

WARNING

The hydraulic oil cooler is very heavy and awkward to handle. To prevent personal injury, use an overhead lifting device to install hydraulic oil cooler on vehicle. Help from assistant(s) may be necessary to guide hydraulic oil cooler during installation procedures.

CAUTION

Be extremely careful not to damage cooling fins when installing hydraulic oil cooler.

NOTE

Refer to Paragraph 2-443 in this manual for installation of hydraulic hoses and fittings.

a. Install elbow (11, Figure 2-27) with new O-ring (12) in hydraulic oil cooler (7) as noted before removal.

b. Install elbow (9) with new O-ring (10) in hydraulic oil cooler (7) as noted before removal.

c. Position hydraulic oil cooler (7) on mounting brackets (8) using an overhead lifting device and help from assistant(s).

d. Install four washers (6), capscrews (3), four washers (6), new lockwashers (5), and nuts (4) in hydraulic oil cooler (7) and mounting brackets (8). Tighten nuts (4) securely.

e. Connect two hydraulic lines (1 and 2) to elbows (9 and 11) respectively. Tighten hydraulic lines (1 and 2) securely.

2-443. HYDRAULIC HOSES AND FITTINGS

a. Hoses

CAUTION

To prevent hydraulic system failure, use only replacement hoses with the same inside diameters, pressure ratings, lengths, and fittings.

(1) When installing replacement hoses (3, Figure 2-25), do not twist, exceed the maximum bend radius, or change hose (3) routing. Hoses (3) must be routed in their original positions.

(2) Install all clamps or brackets and tighten hose fittings securely.

(3) Check for leaks after hydraulic system has been exercised.

b. Fittings

WARNING

To prevent personal injury and possible damage to fittings, use proper size wrench when installing fittings. Be very careful not to cross-thread fittings.

(1) Place wrench on hex portion of fittings and on wrench pad of shaped fittings. Never use pipe wrenches to install fittings.

(2) Tighten all fittings securely. If a connection leaks, tighten fittings until leak stops. Do not over tighten fittings.

(3) If a fitting has an elbow or has to align with tubing or a hose, always complete an extra turn to align - never loosen. If another turn cannot be completed, remove fittings. Apply pipe sealant and install again. If fitting still does not align, use another fitting.

c. Pipe Thread Fittings

NOTE

Fittings with pipe threads have a slight taper on the threaded portion of the fitting.

(1) Apply pipe sealant to male end of pipe thread fitting (1). Do not apply pipe sealant to first thread.

(2) Install pipe thread fitting (1). Tighten pipe thread fitting (1) securely.

d. Straight Thread Fittings

NOTE

Straight thread fittings (4) will be straight on threaded end of fitting. Some straight thread fittings will have an O-ring (5) to aid in sealing.

(1) If there is no O-ring (5), apply Tape, Thread Sealing, Teflon or equivalent.

(2) Install and tighten straight thread fitting (4) securely.

e. Boss Fittings

NOTE

Each boss fitting (6) has an O-ring (9), washer (8), and nut (7).

(1) Install boss fitting (6) in straight thread boss until washer (7) contacts face of boss.

(2) Position boss fitting (6) as needed.

(3) Hold boss fitting (6) in position and tighten nut (7) securely.

f. J.I.C. Flared Fittings

NOTE

J.I.C. flared fittings (10) have 37° flared ends. These fittings do not need pipe sealant on hose end.

(1) Install J.I.C. flared fitting (10).

(2) Tighten J.I.C. flared fitting (10) securely.

g. Quick Couplers

NOTE

Quick couplers (11) are used to ease connection and disconnection of hydraulic hoses. They also prevent the loss of fluid when hoses are disconnected.

(1) To connect quick couplers (11), pull back on locking ring (12) and push quick couplers (11) together.

(2) Release locking ring (12) and continue pushing until quick couplers (11) lock in place, securing quick couplers (11).

h. Flange Block

NOTE

The flange block (4, Figure 2-26) is used where hydraulic hoses have to be mounted to a flat surface.

(1) Lubricate O-ring (3) with clean oil conforming to MIL-L-2104.

(2) Install O-ring (3) and flange (2) on flange block (4).

(3) Install two flange halves (1), four new lockwashers (5), and capscrews (6) on flange block (4). Tighten capscrews (6) securely.

i. O-Ring Replacement

(1) Wrap tape around threads of fitting to prevent damage to O-ring before installation.

(2) Lubricate O-ring (18) with clean oil conforming to MIL-L-2104.

(3) Stretch and carefully roll O-ring on fitting.

(4) Remove tape covering threads.

2-444. RADIATOR GRILLE, RADIATOR GRATE, AND ENGINE COVER

a. Radiator Grille

WARNING

The radiator grille is very heavy and awkward to handle. To prevent personal injury, use an overhead lifting device to install radiator grille on vehicle. Help from assistant(s) may be necessary to guide radiator grille during installation procedures.

(1) Position radiator grille (4, Figure 2-24) on fan mount/radiator support (6) using an overhead lifting device.

(2) Install eight washers (3), new lockwashers (2), and capscrews (1) in radiator grille (4) and fan mount/radiator support (6). Tighten capscrews (1) securely.

NOTE

Perform step (2.1) on LVSA1 series vehicles only.

(2.1) Install six washers (3), new lockwashers (2), and capscrews (1) in radiator grille (4) and radiator grille hold down (6). Tighten capscrews (1) securely.

b. Radiator Grate

(1) Install radiator grate (1, Figure 2-23) on radiator grille (5) and align mounting holes.

(2) Install ten washers (4), new lockwashers (3), and capscrews (2) in radiator grate (1) and radiator grille (5). Tighten capscrews (2) securely.

c. Engine Cover

(1) Position engine cover (3, Figure 2-22) on hinge (4) and align mounting holes.

(2) Install ten capscrews (1) and new locknuts (2) in engine cover (3) and hinge (4) while assistant holds engine cover (3). Tighten locknuts (2) securely.

2-445. QUICK RELEASE VALVE

NOTE

Install related hoses, lines, nylon ties, and clamps as noted before removal.

Coat threads of 90° fittings, reducer, and stop light switch with Pipe Sealant, Loctite 592 or equivalent.

a. Install reducer (9, Figure 2-21) in quick release valve (2) as noted before removal.

b. Install stop light switch (7) in adapter (9). Refer to Paragraph 2-414 in this manual for installation of stop light switches.

c. Install two 90° elbows (8) in quick release valve (2) as noted before removal.

d. Install quick release valve (2) on vehicle using two capscrews (6), and new locknuts (4). Tighten locknuts (4) securely.

e. Connect air lines (1 and 3) to 90° elbows (8) as noted before removal. Tighten air lines (1 and 3) securely.

2-445.1. QUICK RELEASE VALVE

NOTE

Coat threads of 90 degree elbows (9), 45 degree elbow (10), connector (11), and plugs (12) with sealing compound before installing. Tighten fittings and lines securely.

a. Install quick release valve bracket (16) and clamp (15) using two capscrews (14) and new locknuts (13). Tighten locknuts (13) securely.

b. Install plugs (12) into ends of left and right quick release valves (3 and 4). Tighten plugs (12) securely.

c. Install connector (11) into end of right quick release valve (4). Tighten connector (11) securely.

d. Install 45 degree elbow (10) into end of left quick release valve (3). Tighten 45 degree elbow (10) securely.

e. Install 90 degree elbows (9) into tops of left and right quick release valve (3 and 4).

f. Install left and right quick release valves (3 and 4) onto quick release valve bracket (16) using two capscrews (8) and new locknuts (7). Tighten locknuts (7) securely.

g. Install air lines (5 and 6) into sides of left and right quick release valves (3 and 4).

h. Install air lines (1 and 2) into tops of left and right quick release valves (3 and 4).

2-446. SPRING BRAKE VALVE

NOTE

Install related hoses, lines, nylon ties, and clamps as noted before removal.

Coat threads of all fittings, plugs, and nipples with Pipe Sealant, Loctite 592 or equivalent.

a. Install plug (15, Figure 2-20) in spring brake valve (6). Tighten plug (15) securely.

b. Install 90° elbows (10 and 11) in spring brake valve (6) as noted before removal.

c. Install nipple (13) in spring brake valve (6). Tighten nipple (13) securely.

d. Install reducer coupling (14) on nipple (13). Tighten reducer coupling (14) securely.

e. Install 90° elbow (12) in reducer coupling (14).

f. Install nipple (17) in nut (16). Tighten nipple (17) securely.

g. Install tee fitting (18) on nipple (17) as noted before removal. Tighten tee fitting (18) securely.

h. Install 90° elbow (19) in bottom end of tee fitting (18) in position as noted before removal.

i. Install straight fitting (20) in side of tee fitting (18). Tighten straight fitting (20) securely.

j. Position spring brake valve (6) on mounting surface (21) and align mounting holes.

k. Install two capscrews (9) and new locknuts (7) in spring brake valve (6) and mounting surface (21). Tighten locknuts (7) securely.

l. Connect air line (2) to straight fitting (20). Tighten air line (2) securely.

m. Connect four air lines (1, 3, 4, and 5) to 90° elbows (19, 12, 11, and 10) respectively. Tighten air lines (1, 3, 4, and 5) securely.

2-447. AIR LINES AND FITTINGS

a. Air Line Replacement

(1) Measure length of air line (1, Figure 2-17) and cut new air line to same length.

(2) Install air line nuts (2) on both ends of air line (1). Refer to Subparagraph b or c below.

(3) Install air line (1) as noted before removal. Tighten air line nuts (2) securely.

b. Compression Type Fittings

(1) Apply Pipe Sealant, Loctite 592 or equivalent to threads of fitting (5, Figure 2-18) only. Do not apply pipe sealant to nut side of fitting (5).

(2) Install fitting (5). Tighten fitting (5) securely.

(3) Side nut (2) on air line (1) with threads facing out.

(4) Slide new sleeve (3) on air line (1).

(5) Insert eyelet (4) in end of air line (1).

(6) Insert end of air line (1) in fitting (5) as far as possible.

(7) Slide nut (2) on fitting (5). Tighten nut (2) securely.

c. Reusable Type Fittings

(1) Install nut (3, Figure 2-19) on air line (2).

(2) Install nipple (4) through nut (1) as shown.

(3) Install fitting (5) in nut (1). Jam fitting (5) tightly against nut (1).

(4) Thread nipple (4) in nut (3). Tighten nipple (4) until there is 0.3125 inch (0.7935 mm) between nipple (4) and nut (3).

(5) Remove fitting (5) from nut (1).

WARNING

When cleaning with compressed air, regulate to 25 psi maximum. Eyeshields must be worn to prevent injury to the eyes or complete loss of sight.

(6) Clean air line (2) using compressed air.

(7) Apply pipe sealant conforming to MIL-S-46163 to threads of fitting (5) only. Do not apply sealant to air line side of fitting (5).

(8) Install fitting (5). Tighten fitting (5) securely.

(9) Install nut (1) on fitting (5). Tighten nut (1) securely.

2-448. SPARE TIRE HOIST WINCH CABLE

WARNING

To prevent personal injury, personnel shall wear leather gloves conforming to MIL-G-822, NSN 8415-00-268-7870 or equivalent when handling spare tire hoist winch cable.

a. Thread spare tire hoist winch cable (1, Figure 2-16) over pulley to hoist winch drum (4).

b. Place end of spare tire hoist winch cable (1) through hole in hoist winch drum (4).

c. Loop spare tire hoist winch cable (1) as shown.

d. Install clamp (3) and nut (2). Tighten nut (2) securely.

e. Reel in spare tire hoist winch cable (1) on hoist winch drum (4).

2-449. SPARE TIRE HOIST WINCH

a. Install upper hoist winch column (3, Figure 2-15) on two mounting studs (5) on right side of spare tire and wheel assembly carrier (6).

b. Install two retaining pins (4) in mounting studs (5) to secure upper hoist winch column assembly (3).

c. Install lower hoist winch column (2) on two mounting studs (5) on left side of spare tire and wheel assembly carrier (6).

d. Install two retaining pins (4) in mounting studs (5) to secure lower hoist winch column (3).

e. Install hoist winch arm assembly (1) on mounting studs (5) on lower hoist winch column assembly (2).

f. Install two retaining pins (4) in mounting studs (5) to secure hoist winch arm assembly (1).

2-450. LIFTING BRACKET AND SPARE TIRE AND WHEEL ASSEMBLY

a. Lifting Bracket

(1) Position lifting bracket (4, Figure 2-14) in spare tire and wheel assembly (2).

(2) Install three nuts (5) on lifting bracket (4). Tighten nuts (5) securely.

b. Spare Tire and Wheel Assembly

WARNING

The spare tire and wheel assembly is very heavy. To prevent personal injury, do not get between spare tire and wheel assembly and vehicle during installation procedures.

To prevent personal injury, use an overhead lifting device to install spare tire and wheel assembly on vehicle.

NOTE

Help from assistant(s) may be necessary to guide spare tire and wheel assembly before installation procedures.

(1) Position spare tire and wheel assembly (2) on vehicle.

(2) Secure spare tire and wheel assembly (2) to vehicle using three lug nuts (1). Tighten lug nuts (1) securely.

2-451. MOUNTING BRACKET, HAND PRIMING PUMP, AND FUEL FILTERS

NOTE

Install related hoses, lines, nylon ties, and clamps as noted before removal.

a. Mounting Bracket

(1) Position mounting bracket (5, Figure 2-13, Sheet 2 of 2) on fan mount/radiator support (18).

(2) Install two capscrews (17), new lockwashers (16), and nuts (15) in mounting bracket (5) and fan mount/radiator support (18). Tighten nuts (15) securely.

b. Hand Priming Pump

(1) Install nut (13, Figure 2-13, Sheet 1 of 2) on hand priming pump barrel (3).

(2) Install washer (12) on hand priming pump barrel (3).

CAUTION

To prevent sealant from contaminating fuel system, do not apply sealant to first thread on fittings.

NOTE

Apply Pipe Sealant, Loctite 592 or equivalent to threads on 90° elbows (10 and 11) before installing. Do not apply sealant to threads on hose end of 90° elbows (10 and 11).

(3) Install two 90° elbows (10 and 11) in hand priming pump barrel (3) as noted before removal.

(4) Connect hoses (8 and 9) to 90° elbows (10 and 11) respectively. Tighten hose nuts (6 and 7) securely.

(5) Insert hand priming pump barrel (3) through hole in mounting bracket (5).

(6) Install nut (4) on hand priming pump barrel (3). Tighten nut (4) securely.

(7) Install two O-rings (14) on handle assembly (2).

(8) Insert handle assembly (2) in hand priming pump barrel (3).

(9) Start nut (1) on hand priming pump barrel (3) and tighten nut (1) securely.

c. Secondary Fuel Filter and Adapter

(1) Position filter adapter (12, Figure 2-12) on mounting bracket (13).

(2) Install two washers (9), capscrews (11), new lockwashers (10), and nuts (8) in filter adapter (12) and mounting bracket (13). Tighten nuts (8) securely.

CAUTION

To prevent sealant from contaminating fuel system, do not apply sealant to first thread on fittings.

NOTE

Apply Pipe Sealant, Loctite 592 or equivalent to threads on 90° elbows (5, 6, and 7) before installing. Do not apply sealant to threads on fuel line end of 90° elbows (5, 6, and 7).

(3) Install three 90° elbows (5, 6, and 7) in filter adapter (12) as noted before removal.

(4) Connect three fuel lines (2, 3, and 4) to 90° elbows (5, 6, and 7) respectively. Tighten fuel lines (2, 3, and 4) securely.

(5) Fill new filter element (1) with clean diesel fuel.

(6) Install filter element (1) on filter adapter (12) by turning it in a clockwise direction until filter element (1) contacts sealing surface of filter adapter (12). Tighten filter element (1) an additional 2/3 turn using a filter wrench.

d. Fuel/Water Separator

(1) Position fuel/water separator (23, Figure 2-11) on mounting bracket (1) and align mounting holes.

(2) Install four washers (19), capscrews (20), new lockwashers (2), and nuts (3) in fuel/water separator (23) and mounting bracket (1). Tighten nuts (3) securely.

NOTE

Perform steps (2.1 thru 2.3) on LVSA1 series vehicles only.

(2.1) Install three capscrews (27), six washers (26), three new lockwashers (25), and nuts (24). Tighten nuts (24) securely.

(2.2) Install capscrew (27), terminal (29), two new star washers (28), and nut (24). Tighten nut (24) securely.

(2.3) Apply corrosion preventive compound at terminal (29).

(3) Connect hose (22) to 90° elbow (18). Tighten fitting (21) securely.

(4) Connect hose (12) to 90° elbow (17). Tighten fitting (15) securely.

(5) Connect one end of hose (10) to straight adapter (14). Tighten fitting (13) securely.

(6) Connect plug (7). Ensure plug (7) is connected properly.

(7) Connect remaining end of hose (10) to 90° elbow (8). Tighten fitting (9) securely.

(8) Connect hose (6) to 90° elbow (4). Tighten fitting (5) securely.

(9) Connect two wires (11 and 16) to fuel/water separator (23). Ensure wires (11 and 16) are connected properly.

2-452. WORK LIGHTS

NOTE

Install related nylon ties and clamps as noted before removal.

a. Position work light (3, Figure 2-10) in bracket (4).

b. Install retaining pin (2) through bracket (4) and work light (3).

c. Install connector (5) in plug (1) on work light (3).

d. Screw plug (1) on connector (5) and tighten securely.

2-453. EXHAUST PIPE AND MUFFLER ASSEMBLY

WARNING

The exhaust pipe and muffler assembly is very heavy. To prevent personal injury, use two slings, if necessary, and an overhead lifting device to install exhaust pipe and muffler assembly.

a. Install two capscrews (40, Figure 2-9), ten washers (37), four springs (38), plate (39), and four nuts (36) to mounting bracket (41).

b. Install two rear mounting biscuits (35) using four capscrews (34), washers (33), new lockwashers (32), and nuts (31) on mounting bracket (48). Tighten nuts (31) securely.

c. Install clamp (16) on muffler (17) using capscrews (22) and new locknut (21). Finger tighten locknut (21).

d. Install clamp (26) on muffler (17) using rear mounting plate (11), two washers (25), new lockwashers (24), and nuts (23). Finger tighten nuts (23).

e. Slide ball joint (46) and flange (47) together.

f. Install elbow (45) in ball joint (46) with clamp (44), new lockwashers (43), and nuts (42). Tighten nuts (42) securely.

g. Install exhaust pipe (3) on turbocharger (4) as shown.

h. Slide clamp (2) on exhaust pipe (3). Tighten nut (1) securely.

i. Install muffler (17) on exhaust pipe (3).

j. Install clamp (20) on muffler (17) using two washers (19) and nuts (18). Tighten nuts (18) securely.

k. Install two washers (14), capscrews (15), new lockwashers (13), and nuts (12) in clamp (16) and plate (39). Tighten nuts (12) and locknut (21) securely.

l. Install exhaust elbow (8) in muffler (17) as shown. Tighten two nuts (23) securely.

m. Install two capscrews (9) and new lockwashers (10) in two rear mounting biscuits (35). Tighten capscrews (9) securely.

n. Install rain cap (7) on exhaust elbow (8).

o. Install capscrews (6) and nut (5) in rain cap (7). Tighten nut (5) securely.

p. Install heat shield (30) using three capscrews (29), new lockwashers (28), and nuts (27). Tighten nuts (27) securely.

2-454. MOUNTING BRACKET AND BEACON LIGHT

a. Position mounting bracket (12, Figure 2-8) on vehicle as noted before removal.

b. Install four new lockwashers (9), capscrews (8), four remaining new lockwashers (9), and nuts (10) in vehicle bracket (17) and mounting bracket (12). Tighten nuts (10) securely.

c. Install cable tie (7) on mounting bracket (12) using screw (3) and nut (11). Tighten nut (11) securely.

d. Install new gasket (15) on mounting bracket (12).

e. Thread primary wire (5) through cable tie (7), hole in mounting bracket (12), rubber bushing (13), and gasket (15).

f. Splice two ends of primary wire (5) together where it was cut before removal.

g. Install rubber bushing (13) in mounting bracket (12).

NOTE

Position beacon light near mounting bracket before installation of ground wire and splicing of primary wire.

h. Install new star washer (2), terminal (4) of ground wire (14), new star washer (2), screw (3), and nut (11) in mounting bracket (12). Tighten nut (11) securely.

i. Position beacon light (16) on gasket (15) and mounting bracket (12) and align mounting holes.

j. Install three new star washers (2) and screws (1) in beacon light (16) and mounting bracket (12). Tighten screws (1) securely.

2-455. EXTERIOR ACCESS PANELS

a. Install molding (3, Figure 2-7) on exterior access panel (2).

b. Position exterior access panels (1, 2, 7, 8, and 9) on vehicle and align mounting holes.

c. Install 11 washers (6), new lockwashers (5), and capscrews (4) in exterior access panels (1, 2, 7, 8, and 9) and vehicle. Tighten capscrews (4) securely.

2-456. SKID PLATE FRAME, SKID PLATE, AND GRILLE

a. Skid Plate Frame

WARNING

The skid plate frame is very heavy. To prevent serious personal injury or death, use an overhead lifting device to install skid plate frame on vehicle.

(1) Position skid plate frame (23, Figure 2-6) on vehicle, using an overhead lifting device, and align mounting holes.

(2) Install eight capscrews (25) and nuts (24) in skid plate frame (23) and vehicle. Tighten nuts (24) securely.

(3) Install two capscrews (22) and nuts (21) in skid plate frame (23) and vehicle. Tighten nuts (21) securely.

b. Skid Plate

WARNING

The skid plate is very heavy. To prevent serious personal injury or death, use an overhead lifting device to install skid plate on vehicle.

(1) Position skid plate (12) on vehicle, using an overhead lifting device, and align mounting holes.

(2) Install four washers (19), capscrews (18), and nuts (20) in skid plate (12) and skid plate frame (23). Tighten nuts (20) securely.

(3) Install nine capscrews (16) and nuts (17) in bottom of skid plate (12) and skid plate frame (23). Tighten nuts (17) securely.

(4) Install 11 washers (10), capscrews (9), and nuts (11) in top of skid plate (12) and skid plate frame (23). Tighten nuts (11) securely.

(5) Position peep window guard (8) on skid plate (12) and align mounting holes.

(6) Install five capscrews (5), washers (7), and nuts (6) in peep window guard (8) and skid plate (12). Tighten nuts (6) securely.

(7) Position two headlight guards (4) on skid plate (12) and align mounting holes.

(8) Install eight capscrews (1), washers (3), and nuts (2) in skid plate (12). Tighten nuts (2) securely.

c. Grille

(1) Position grille (4, Figure 2-5) on skid plate (5) and align mounting holes.

(2) Install eight capscrews (1), new lockwashers (3), and nuts (2) in grille (4) and skid plate (5). Tighten nuts (2) securely.

2-457. WHEEL AND TIRE ASSEMBLY

WARNING

The MK48 is extremely heavy. To prevent personal injury, be extremely careful when removing the MK48 from the jack stands. Use an overhead lifting device or a floor jack capable of lifting the MK48 to remove it from the jack stands.

WARNING

To prevent personal injury, direct personnel to stay clear of MK48 during removal from jack stands.

NOTE

Lug nuts on left side of vehicle are left-hand thread. Lug nuts on right side of vehicle are right-hand thread. Do not attempt to switch sides.

a. Install tires (1, Figure 2-4) and wheel assemblies (4) on hubs (2).

b. Install ten lug nuts (3) on each hub (2). Hand tighten lug nuts (3) following pattern shown.

c. Raise rear end of MK48, using an overhead lifting device, and remove two 10-ton jack stands from positions (3 and 4, Figure 2-3).

WARNING

When returning axle to the ground, ensure personnel are out of the trajectory as shown by the area indicated. Failure to comply may result in serious injury or death to personnel.

d. Lower rear end of MK48 until tires (1, Figure 2-4) and wheel assemblies (4) contact ground.

e. Torque lug nuts (3) to 650-750 ft-lb (881.4-1017 N·m) following pattern shown.

f. Repeat steps a through e for front tires (1) and wheel assemblies (4).

2-457.1. SLAVE CONNECTOR (LVSA1 SERIES VEHICLES ONLY)

a. Install cover (10, Figure 2-1.2) and new gasket (12) onto slave connector (11).

b. Install slave connector (11) into vehicle bracket.

c. Slide bellows (2) over battery cables (6 and 5).

d. Install battery cable (6) onto slave connector (11) with capscrew (3) and new lockwasher (4). Tighten capscrew (3) securely.

e. Install four capscrews (7), making sure one of them goes through cover (10) eyelet.

f. Install insulator (9) and four new locknuts (8). Tighten locknuts (8) securely.

g. Install battery cable (5) onto slave connector (11) with capscrew (3) and new lockwasher (4). Tighten capscrew (3) securely.

h. Coat ends of battery cables (6 and 5) and slave connector (11) with corrosion preventive compound.

i. Install bellows (2) using cable tie (1). Ensure that bellows (2) fits securely to the back of the slave connector (11).

j. Cut a 0.25 inch (6.35 mm) diameter drainage hole in the bottom of bellows (2).

2-457.2. BATTERY CABLES, BATTERIES, AND BATTERY BOX (LVSA1 SERIES VEHICLES ONLY)

a. Position battery box (90, Figure 2-1.1, Sheet 2 of 2) on vehicle and install two capscrews (89), four washers (88), and two new locknuts (87). Tighten locknuts (87) securely.

b. Install four capscrews (86), four washers (85), and four new locknuts (84). Tighten locknuts (84) securely.

c. Position four batteries (83) in battery box (90) with positive battery posts (+) facing toward front of vehicle.

d. Loosely install capscrew (82) and nut (81) on terminal (17).

e. Install capscrew (80), washer (79), cable (70), wire (78), washer (77), new lockwasher (76), and nut (75) on terminal (17). Torque nut to 12-16 foot-pounds (16-22 N•m).

f. Loosely install capscrew (74) and nut (73) on terminal (20).

g. Install capscrew (72), washer (71), two cables (70 and 69) washer (68), new lockwasher (67), and nut (66) on terminal (20). Torque nut to 12-16 foot-pounds (16-22 N•m).

h. Loosely install capscrew (65) and nut (13) on terminal (14).

i. Install capscrew (64) , washer (63), cable (55) washer (62), new lockwasher (61), and nut (60) on terminal (14). Torque nut to 12-16 foot-pounds (16-22 N•m).

j. Loosely install capscrew (59) and nut (58) on terminal (19).

k. Install capscrew (57), washer (56), two cables (47 and 55), washer (54), new lockwasher (53), and nut (52) on terminal (19). Torque nut to 12-16 foot-pounds (16-22 N•m).

l. Loosely install capscrew (51) and nut (50) on terminal (18).

m. Install capscrew (49) washer (48), two cables (39 and 47), washer (46), new lockwasher (45), and nut (44) on terminal (18). Torque nut to 12-16 foot-pounds (16-22 N•m).

n. Loosely install capscrew (43) and nut (42) on terminal (16).

o. Install capscrew (41) washer (40), cable (39), washer (38), new lockwasher (37), and nut (36) on terminal (16). Torque nut to 12-16 foot-pounds (16-22 N•m).

p. Loosely install capscrew (35) and nut (2) on terminal (3).

q. Install capscrew (34), washer (33), cable (24), washer (32), new lockwasher (31), and nut (30), on terminal (3). Torque nut to 12-16 foot-pounds (16-22 N•m).

r. Loosely install capscrew (29) and nut (5) on terminal (6).

s. Install capscrew (28), washer (27), two cables (24 and 25), washer (23), new lockwasher (22), and nut (21) on terminal (6). Torque nut to 12-16 foot-pounds (16-22 N•m).

t. Install terminal (14) on battery post (15, Figure 2-1.1, Sheet 1 of 2) and tighten nut (13).

u. Repeat step s. for terminals (16, 17, 18, 19, and 20).

v. Install batteries in battery box (90) using two brackets (11), four hold-down hooks (12), eight washers (10), four new lockwashers (9), and four nuts (8). Tighten nuts securely.

w. Install four hold-down hooks (12).

x. Install batteries in battery box (90). Secure batteries as follows:

(1) Loosen four hold-down hook nuts (91) one-half turn.

NOTE

Do not tighten nuts (8) greater than 20 - 25 in-lb (2.3 - 2.8 N·m). Failure to comply may result in damage to equipment.

(2) Install two brackets (11) onto hold-down hooks (12) using eight washers (10), four new lockwashers (9), and four nuts (8). Torque nuts (8) to 20 - 25 in-lb (2.3 - 2.8 N·m).

(3) Tighten four hold-down hook nuts (91) securely.

y. Install terminal (6) on battery post (7) and tighten nut (5).

z. Install terminal (3) on battery post (4) and tighten nut (2).

z1. Coat battery terminals with corrosion preventive compound.

z2. Install battery box cover (1).

2-458. BATTERY BOX, BATTERIES, AND BATTERY CABLES

WARNING

To prevent personal injury, ensure batteries are disconnected and do not wear watches, rings, and other jewelry when working on electrical components.

Do not smoke or use an open flame around batteries. Sparks may cause batteries to explode.

To prevent arcing and personal injury, do not allow tools to contact battery box or battery terminals when removing or installing cables.

When connecting battery cables, always connect ground cables last. When disconnecting battery cables, always disconnect ground cables first.

a. Battery Box

(1) Position battery box (41, Figure 2-1) on left fender (42) and align mounting holes.

(2) Install two brackets (37) in battery box (41).

(3) Install six capscrews (40), new lockwashers (39), and nuts (38) in brackets (37), battery box (41), and left fender (42). Tighten nuts (38) securely.

(4) Slide four battery hold-down capscrews (34) in brackets (37).

b. Batteries

(1) Install four batteries (36) in battery box (41).

(2) Install battery hold-down frame (35) on four batteries (36).

(3) Install four new locknuts (33) on battery hold-down capscrews (34). Tighten locknuts (33) securely.

c. Battery Cables

(1) Install battery cable (32) on positive battery studs (26 and 30).

(2) Install battery cable (31) on negative battery studs (25 and 29).

(3) Install two new locknuts (28) on negative battery stud (29) and positive battery stud (30). Tighten locknuts (28) securely.

(4) Install battery cable (27) and two new locknuts (24) on negative battery stud (25) and positive battery stud (26). Tighten locknuts (24) securely.

(5) Install one end of battery cable (23) to positive battery stud (18) and install other end of battery cable (23) to slave connector (15) using new lockwasher (22) and capscrew (21). Tighten capscrew (21) securely.

(6) Install wire (20) on positive battery stud (6).

(7) Install one end of battery cable (19) on positive battery stud (6) and install other end of battery cable (19) on positive battery stud (18).

(8) Install new locknut (17) on positive battery stud (18). Tighten locknut (17) securely.

(9) Install one end of battery cable (16) on negative battery stud (9) and install other end of battery cable (16) on slave connector (15) using new lockwasher (14) and capscrew (13). Tighten capscrew (13) securely.

(10) Install two wires (11 and 12) on negative battery stud (3).

(11) Install one end of battery cable (10) on negative battery stud (3) and other end of battery cable (10) on negative battery stud (9).

(12) Install new locknut (8) on negative battery stud (9). Tighten locknut (8) securely.

(13) Install positive battery cable (7) on positive battery stud (6).

(14) Install new locknut (5) on positive battery stud (6). Tighten locknut (5) securely.

(15) Install negative battery cable (4) on negative battery stud (3).

(16) Install new locknut (2) on negative battery stud (3). Tighten locknut (2) securely.

(17) Install battery box cover (1) on battery box (41) and secure.

Section VI. ALIGNMENTS AND ADJUSTMENTS

2-459. ALIGNMENTS. Refer to TM 2320-20/12 for alignment procedures for articulation joint, axle no. 1, and axle no. 2 (coupled and uncoupled units).

2-460. ADJUSTMENTS

a. Steering. Refer to TM 2320-20/12 for steering adjustment which includes toe-in, cramp, pitman arm, and steering gear relief adjustments.

b. Brake Treadle Valve

(1) Adjust stop button (1, Figure 2-213) so that rollers (2) contact plunger (3). Rollers (2) must still be able to turn freely.

(2) Tighten nut (4) after stop button (1) is adjusted. Ensure adjustment does not change.

c. Priority Fluid Control Valve

NOTE

This procedure requires operation of the MK48. Refer to Paragraph 2-13, TM 2320-10/11.

Place a container to catch hydraulic fluid.

Set wheels straight ahead.

Warm hydraulic oil to at least 150 °F (65 °C) before checking flow.

(1) Remove hydraulic reservoir fill cap and install vacuum pump (part of vacuum pump kit 2217) or equivalent, on hydraulic reservoir. Turn vacuum pump on.

(2) Disconnect hydraulic line (1, Figure 2-214) from relief valve (2) and connect to output side of flow tester (4222) or equivalent.

(3) Assemble hydraulic input line as shown and connect to relief valve (2).

(4) Turn vacuum pump off and remove vacuum pump from hydraulic reservoir. Install hydraulic reservoir fill cap.

(5) Open pressure control valve on flow tester (4222) or equivalent, fully by turning knob counterclockwise to decrease.

(6) Loosen jamnut (3).

CAUTION

To prevent parts damage, do not over tighten adjusting screw (4).

(7) Pre-set adjusting screw (4) by turning fully in and then backing out 2-1/2 turns.

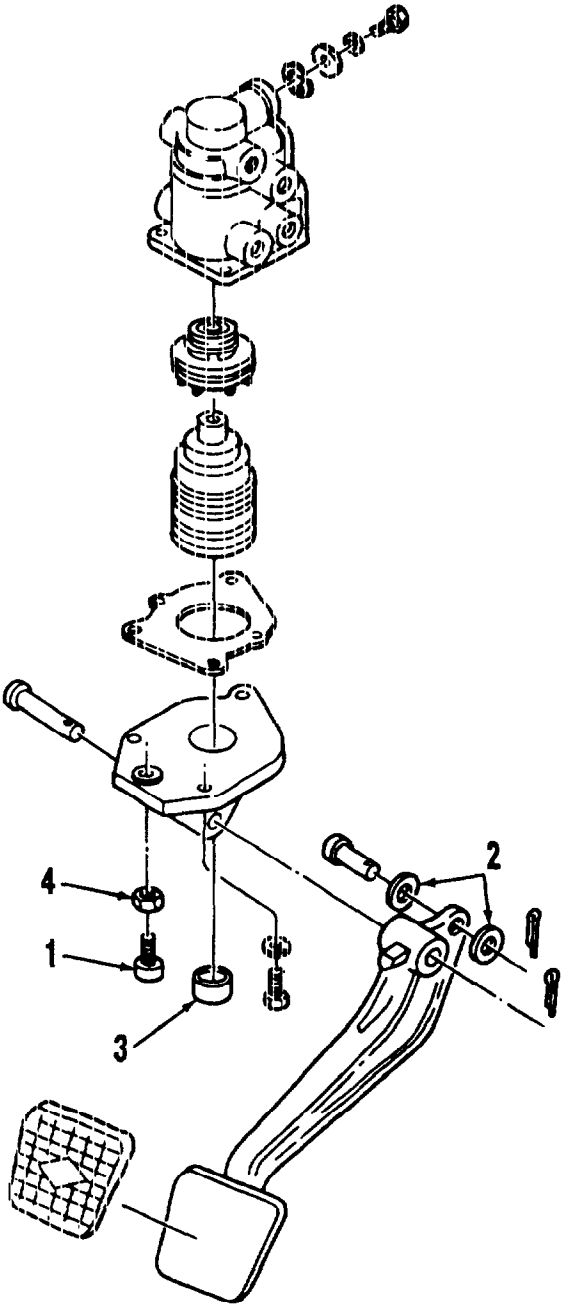

1. Stop Button
2. Rollers (2)
3. Plunger
4. Nut

Figure 2-213. Brake Treadle Valve Adjustment

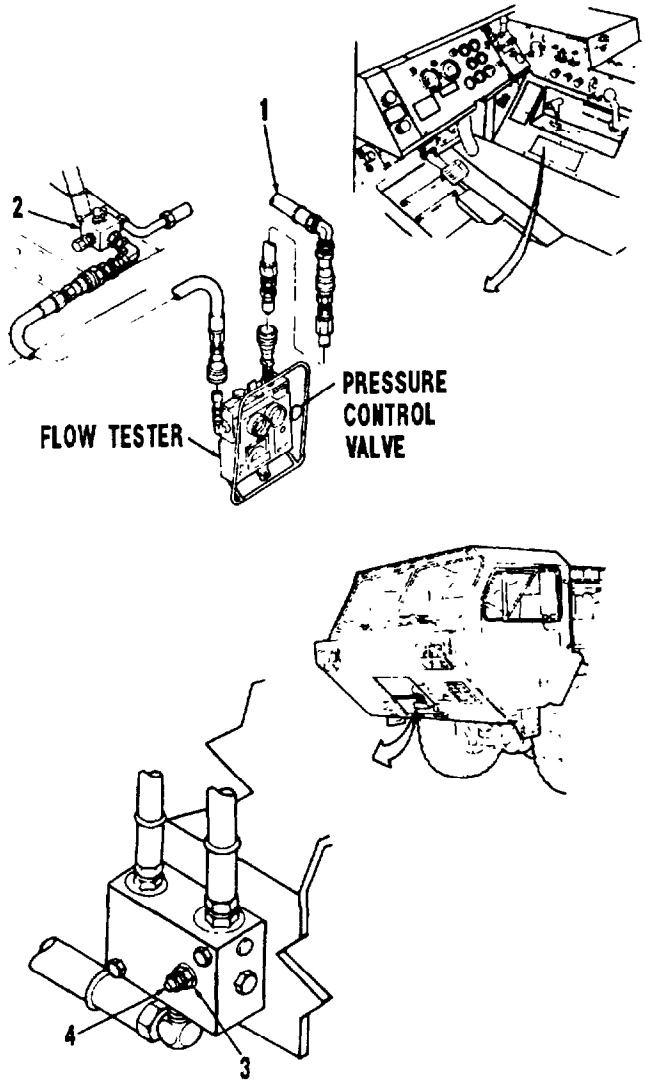

1. Hydraulic Line
2. Relief Valve
3. Jamnut
4. Adjusting Screw

Figure 2-214. Priority Fluid Control Valve Adjustment

CAUTION

To prevent parts damage, do not turn steering wheel in either direction while testing and adjusting.

(8) Start engine and increase to maximum engine speed.

(9) Slowly close pressure control valve by turning knob clockwise. This will create a 1000 psi (6,895 kPa) working pressure. Check for 2.8-3.0 gallons per minute (gpm) (10.6-11.3 Liters per minute (Lpm)).

(10) Turn adjusting screw (4) in to reduce flow. Turn adjusting screw (4) out to increase flow.

CAUTION

To prevent equipment damage, do not disturb setting of adjusting screw (4) when tightening jamnut (3).

(11) Tighten jamnut (3) securely. Shut off engine.

(12) Install vacuum pump on reservoir and turn on.

(13) Disconnect and remove hydraulic flow tester (4222) or equivalent.

(14) Connect hydraulic line (1) to relief valve (2). Tighten hydraulic line (1) securely.

d. Transfer Case Shift Linkage

(1) Position shift lever (1, Figure 2-215) all the way forward.

(2) Remove cotter pin (3), clevis pin (4), and clevis (5) from shift shaft (6). Discard cotter pin (3).

(3) Position shift shaft (6) all the way in.

(4) Loosen clevis (5) and locknut (7) and turn clevis (5) in or out to obtain proper length of shift cable (2).

(5) Tighten clevis (5) and locknut (7) and install clevis (5), clevis pin (4), and new cotter pin (3). Spread ends of cotter pin (3) to secure it in place.

NOTE

If proper adjustment cannot be obtained at transfer case end of shift cable (2), further adjustment can be made at shift lever end of shift cable (2). Repeat steps (1 through 5) at shift lever end of shift cable (2).

e. Brakes

WARNING

Block wheels to prevent personal injury.

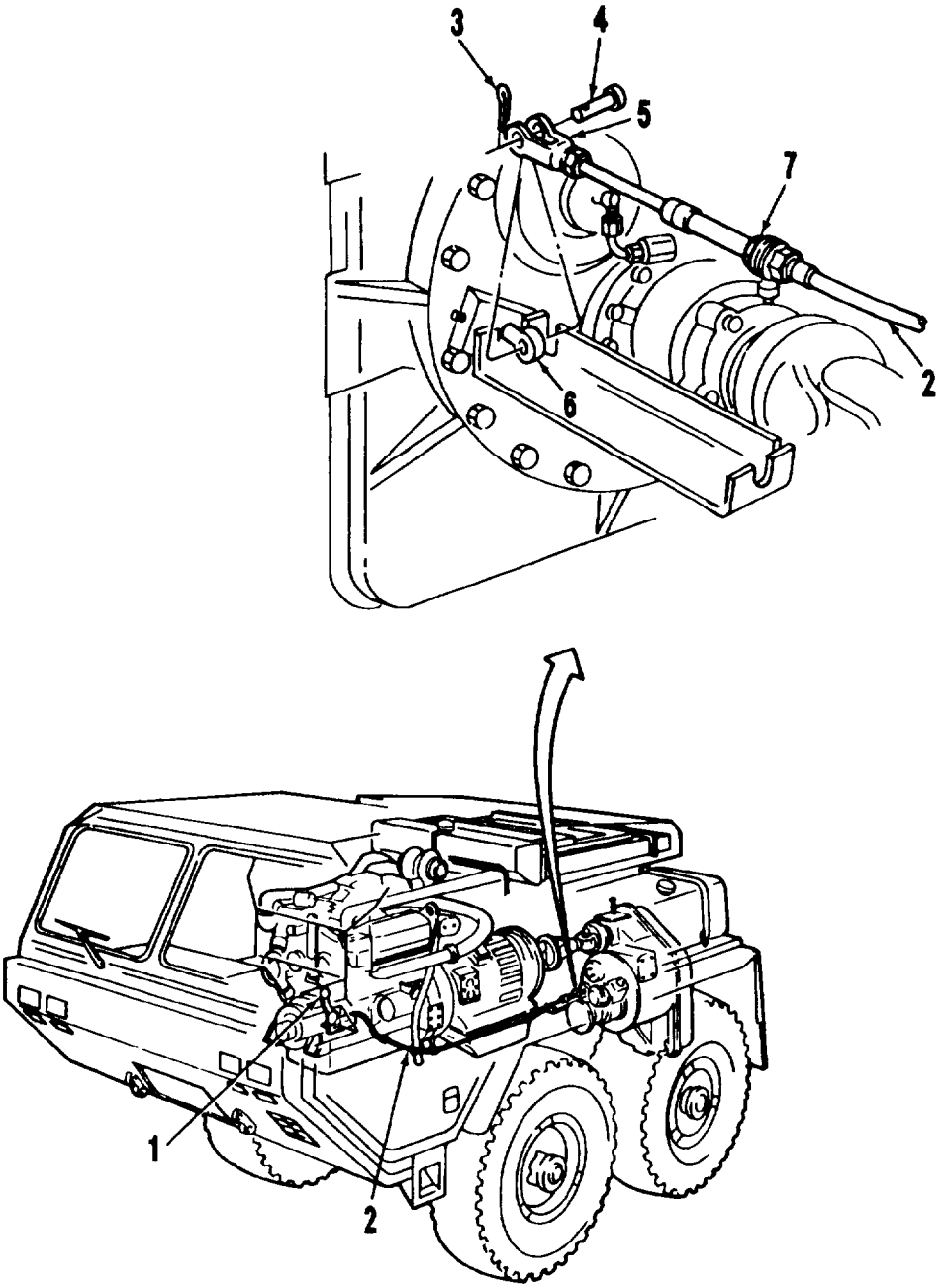

1. Shift Lever
2. Shift Cable
3. Cotter Pin
4. Clevis Pin
5. Clevis
6. Shift Shaft
7. Locknut

Figure 2-215. Transfer Case Shift Linkage Adjustment

(1) Axle No. 1

(a) Jack wheel to be adjusted free of ground. Support axle with jack stand rated at 10 tons or more.

(b) Turn star wheel portion (1, Figure 2-216) of adjusting bolts (2) until brake drum (4) will not turn. Both star wheels (1) must be turned the same amount.

(c) Back off star wheels (1) equal amounts until 0.020-0.040 inch (0.050-1.00 mm) clearance can be measured between center of brake shoe lining (3) and brake drum (4).

(d) Turn brake drum (4). A light drag should be felt. If not, re-adjust or check for damaged brake parts.

(e) Raise axle and remove jack stand from MK48. Lower MK48 and remove jack.

(f) Start engine. Apply and release brakes several times.

(g) Re-check clearance. If clearance is not within specifications, repeat procedure as necessary.

(h) Repeat steps (a through g) for opposite side.

(2) Axle No. 2

(a) Start engine.

(b) Build air pressure to at least 80 psi (552 kPa).

(c) Shut down engine.

WARNING

Block wheels to prevent personal injury.

NOTE

If brake shoes on one side of axle need adjustment, both sides of axle must be adjusted.

Always adjust the brakes on any piece of equipment that is towed behind an LVS at the same time the LVS brakes are adjusted.

Parking brake must be released when adjusting rear brakes.

(d) Release parking brake.

(e) While assistant holds brake treadle valve down, measure between center of yoke pin (1, Figure 2-217) and chamber bracket (2). Record measurement.

(f) With brake treadle valve released, measure between center of yoke pin (1) and chamber bracket (2). Record measurement.

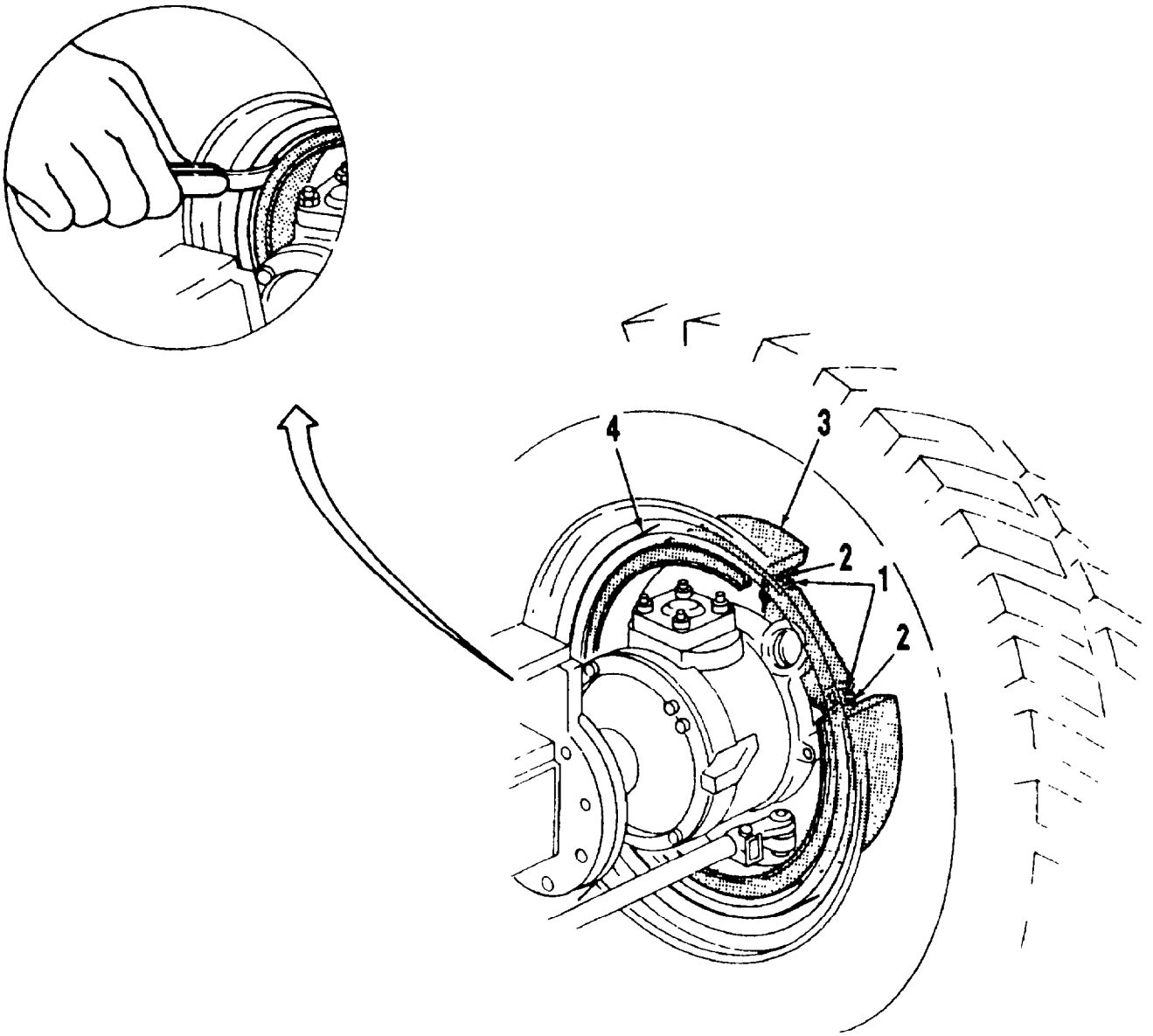

1. Star Wheel (2)
2. Adjusting Bolt (2)
3. Brake Shoe Lining (2)
4. Brake Drum

Figure 2-216. Brake Adjustment (Axle No. 1)

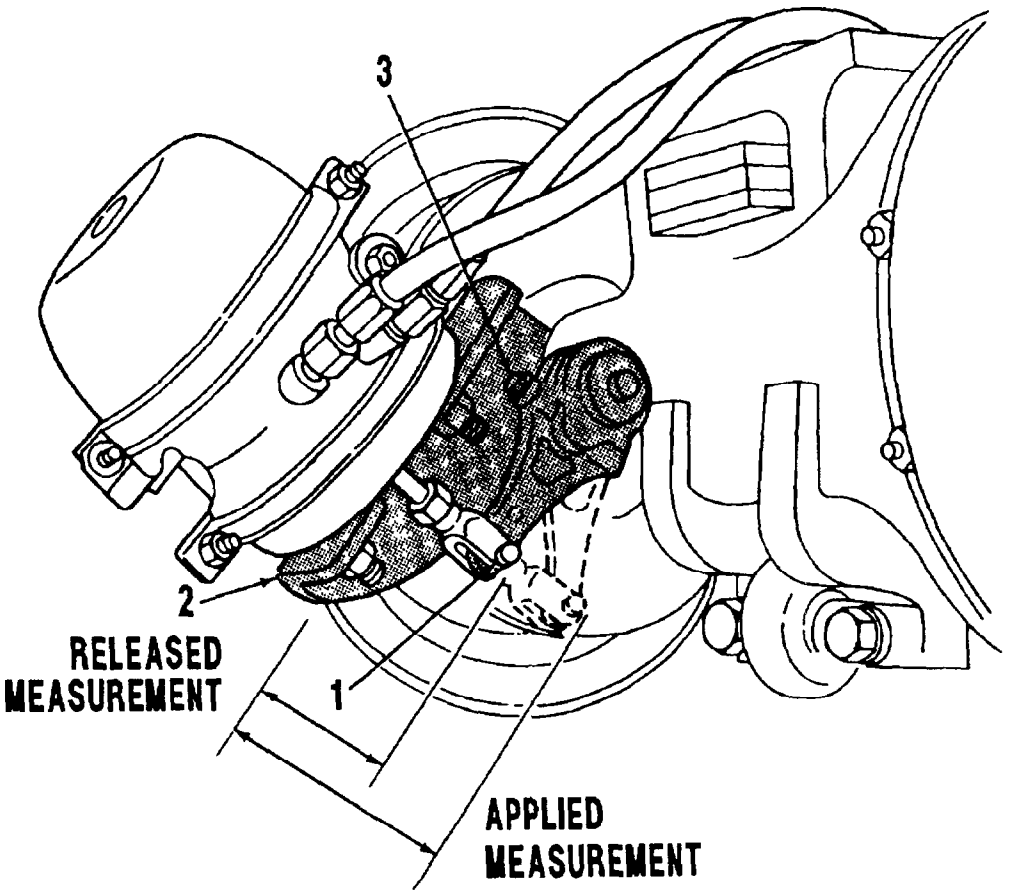

1. Yoke Pin
2. Chamber Bracket
3. Adjusting Screw

Figure 2-217. Brake Adjustment (Axle No. 2)

(g) Subtract measurement taken in step (f) from measurement taken in step (e). If the difference is more than two inches (5.08 cm) on any one brake assembly, adjust all brakes on axle no. 2.

(h) Jack wheel to be adjusted free of the ground. Support axle with a jack stand rated at 10 tons or more.

(i) Tighten adjusting screw (3) until tire cannot be turned by hand.

(j) Back out adjusting screw (3) three clicks or 1/4 turn.

(k) Remove jack stand.

(l) Repeat steps (a through k) for opposite end of axle no. 2.

Section VII. LUBRICATION, PAINTING, AND MARKING

2-461. LUBRICATION, PAINTING, AND MARKING

a. Lubrication. Lubricate MK48 according to Lubrication Instruction (LI) 2320-12/9.

b. Painting

(1) Clean MK48 prior to painting. Steam clean to remove all grease, oil, dirt, and foreign material.

(2) Remove all loose paint and corrosion. Refer to Paragraph 2-153, CLEANING.

NOTE

For general painting instructions, refer to TM 4750-15/series.

(3) Prepare paint surface.

(4) Prime and paint MK48 according to TM 4750-15/1. Refer to TM 4750-15/2-4 for the camouflage pattern if contractually required.

c. Marking. Mark MK48 according to TM 4750-15/1.

Section VIII. POST ASSEMBLY INSPECTION

2-462. POST ASSEMBLY INSPECTION

a. Inspection Instructions. Parts and components of the Power Unit, Front, 12-1/2 Ton, 4x4, MK48, MOD 0 shall be inspected according to the applicable specifications and drawings listed under each item. Items to be inspected are listed by item number, parameter, and method of inspection. A deficiency sheet will be used to list the item number inspected, description of deficiency, corrective action taken, and the inspector's initials. The vehicle will be released, after a complete inspection and correction of deficiencies, for a road test. Post assembly inspection applies to IROAN vehicles as well as those overhauled.

b. Inspection Criteria. Parts and components of the MK48 to be inspected are listed in Table 2-3.

Table 2-3. Post Assembly Inspection Checklist

Item No.	Parameter	Method of Inspection	Pass	Fail
1.	Front of MK48	Visual/Functional	_____	_____
	a. Air Lines, Hoses, and Fittings	Visual/Tactile	_____	_____
	(1) Proper Installation	Visual/Tactile	_____	_____
	(2) Connections	Visual/Tactile	_____	_____
	(3) Leaks	Visual/Audible	_____	_____
	(4) Damage/Defects	Visual/Functional	_____	_____
	b. Sheet Metal	Visual/Tactile	_____	_____
	(1) Rust and/or Corrosion	Visual/Tactile	_____	_____
	(2) Cracks and/or Breaks	Visual/Tactile	_____	_____
	(3) Damage/Defects	Visual/Tactile	_____	_____
	c. Windshield	Visual/Tactile	_____	_____
	(1) Proper Installation	Visual/Tactile	_____	_____
	(2) Cracks and/or Breaks	Visual/Tactile	_____	_____
	(3) Damage/Defects	Visual/Tactile	_____	_____
	d. Front Skid Plate	Visual/Tactile	_____	_____
	(1) Proper Installation	Visual/Tactile	_____	_____
	(2) Rust and/or Corrosion	Visual/Tactile	_____	_____

Table 2-3. Post Assembly Inspection Checklist-CONT

Item No.	Parameter	Method of Inspection	Pass	Fail
	d. Front Skid Plate-CONT	Visual/Tactile	_____	_____
	(3) Cracks and/or Breaks	Visual/Tactile	_____	_____
	(4) Damage/Defects	Visual/Tactile	_____	_____
	e. Wiper Arms and Blades	Visual/Functional	_____	_____
	(1) Proper Installation	Visual/Tactile	_____	_____
	(2) Dry Rot	Visual/Tactile	_____	_____
	(3) Damage/Defects	Visual/Tactile	_____	_____
	f. Cab Clearance Lights	Visual/Functional	_____	_____
	(1) Proper Installation	Visual/Tactile	_____	_____
	(2) Proper Operation	Visual/Functional	_____	_____
	(3) Damage/Defects	Visual/Functional	_____	_____
	g. Sealed Beam Headlights	Visual/Functional	_____	_____
	(1) Proper Installation	Visual/Tactile	_____	_____
	(2) Proper Operation	Visual/Functional	_____	_____
	(3) Damage/Defects	Visual/Functional	_____	_____
	h. Turn Signal Lights	Visual/Functional	_____	_____
	(1) Proper Installation	Visual/Tactile	_____	_____
	(2) Proper Operation	Visual/Functional	_____	_____
	(3) Damage/Defects	Visual/Functional	_____	_____
	i. Tiedown Eyes	Visual/Functional	_____	_____
	(1) Proper Installation	Visual/Tactile	_____	_____
	(2) Cracks and/or Breaks	Visual/Tactile	_____	_____
	(3) Damage/Defects	Visual/Tactile	_____	_____

Table 2-3. Post Assembly Inspection Checklist-CONT

Item No.	Parameter	Method of Inspection	Pass	Fail
	j. Composite Lights	Visual/Functional	_____	_____
	(1) Proper Installation	Visual/Tactile	_____	_____
	(2) Proper Operation	Visual/Functional	_____	_____
	(3) Damage/Defects	Visual/Functional	_____	_____
2.	Exterior Right Side of MK48	Visual/Functional	_____	_____
	a. Cab Step	Visual/Tactile	_____	_____
	(1) Proper Installation	Visual/Tactile	_____	_____
	(2) Cracks and/or Breaks	Visual/Tactile	_____	_____
	(3) Damage/Defects	Visual/Tactile	_____	_____
	b. Reflector and Clearance Light	Visual/Functional	_____	_____
	(1) Proper Installation	Visual/Tactile	_____	_____
	(2) Cracks and/or Breaks	Visual/Tactile	_____	_____
	(3) Proper Operation	Visual/Functional	_____	_____
	(4) Damage/Defects	Visual/Tactile	_____	_____
	c. Passenger Door	Visual/Functional	_____	_____
	(1) Ease of Operation	Visual/Functional	_____	_____
	(2) Fit/Seal	Visual/Functional	_____	_____
	(3) Damage/Defects	Visual/Functional	_____	_____
	(4) Window	Visual/Functional	_____	_____
	(a) Proper Installation	Visual/Tactile	_____	_____
	(b) Cracks and/or Breaks	Visual/Tactile	_____	_____
	(c) Proper Operation	Visual/Functional	_____	_____
	(d) Damage/Defects	Visual/Tactile	_____	_____
	(5) Side Mirrors w/Spotters	Visual/Tactile	_____	_____
	(a) Proper Installation	Visual/Tactile	_____	_____

Table 2-3. Post Assembly Inspection Checklist-CONT

Item No.	Parameter	Method of Inspection	Pass	Fail
	(5) Side Mirrors w/Spotters-CONT			
	(b) Cracks and/or Breaks	Visual/Tactile	_____	_____
	(c) Damage/Defects	Visual/Tactile	_____	_____
	d. Tires	Visual/Tactile	_____	_____
	(1) Proper Installation	Visual/Tactile	_____	_____
	(2) Proper Inflation	Visual/Gauge	_____	_____
	(3) Damage/Defects	Visual/Functional	_____	_____
	(a) Cuts	Visual/Tactile	_____	_____
	(b) Gouges	Visual/Tactile	_____	_____
	(c) Excessive Wear	Visual/Tactile	_____	_____
	e. Wheels	Visual/Tactile	_____	_____
	(1) Proper Installation	Visual/Tactile	_____	_____
	(2) Lug Nuts for Looseness	Visual/Tactile	_____	_____
	(3) Damage/Defects	Visual/Tactile	_____	_____
	f. Hydraulic Reservoir	Visual/Tactile	_____	_____
	(1) Leakage	Visual/Tactile	_____	_____
	(2) Proper Fluid Level	Visual/Tactile	_____	_____
	(3) Hydraulic Hoses, Lines, and Fittings	Visual/Tactile	_____	_____
	(a) Leaks	Visual/Tactile	_____	_____
	(b) Damage/Defects	Visual/Functional	_____	_____
	(4) No Rust on Filler Neck	Visual/Tactile	_____	_____
	(5) Sight Gauge	Visual/Tactile	_____	_____
	(a) Proper Installation	Visual/Tactile	_____	_____

Table 2-3. Post Assembly Inspection Checklist - CONT

Item No.	Parameter	Method of Inspection	Pass	Fail
	(5) Sight Gauge-CONT			
	(b) Proper Operation	Visual/Functional	_____	_____
	(c) Damage/Defects	Visual/Tactile	_____	_____
	(6) Hydraulic Selector Valve	Visual/Functional	_____	_____
	(a) Proper Installation	Visual/Tactile	_____	_____
	(b) Proper Operation	Visual/Functional	_____	_____
	(c) Damage/Defects	Visual/Tactile	_____	_____
	(d) Hydraulic Hoses, Lines and Fittings	Visual/Tactile	_____	_____
	1 Leaks	Visual/Tactile	_____	_____
	2 Damage/Defects	Visual/Functional	_____	_____
	(7) Hydraulic Sampling Valve*	Visual/Functional	_____	_____
	(a) Fitting*	Visual/Tactile	_____	_____
	(b) Leaks*	Visual/Tactile	_____	_____
	(c) Damage/Defects*	Visual/Tactile	_____	_____
	g. Fuel Tank	Visual/Tactile	_____	_____
	(1) Proper Installation	Visual/Tactile	_____	_____
	(2) Connections	Visual/Tactile	_____	_____
	(3) Cracks and/or Breaks	Visual/Tactile	_____	_____
	(4) Rust and/or Corrosion	Visual/Tactile	_____	_____
	(5) Damage/Defects	Visual/Tactile	_____	_____
	h. Muffler and Exhaust Assembly	Visual/Functional	_____	_____
	(1) Proper Installation	Visual/Tactile	_____	_____
	(2) Exhaust Leaks	Visual/Functional	_____	_____
	(3) Cracks and/or Breaks	Visual/Tactile	_____	_____
	(4) Rust and/or Corrosion	Visual/Tactile	_____	_____
	(5) Damage/Defects	Visual/Tactile	_____	_____
	i. Eng Oil/Transmission Oil Sampling Valves*	Visual/Functional	_____	_____
	(1) Hose/Fitting*	Visual/Tactile	_____	_____
	(2) Leaks*	Visual/Tactile	_____	_____
	(3) Damage/Defects*	Visual/Tactile	_____	_____
	Rear of MK48	Visual/Functional	_____	_____

* LVSA1 Series Vehicles Only

Table 2-3. Post Assembly Inspection Checklist-CONT

Item No.	Parameter	Method of Inspection	Pass	Fail
	a. Auxiliary Work Light	Visual/Functional	_____	_____
	(1) Proper Installation	Visual/Tactile	_____	_____
	(2) Proper Operation	Visual/Functional	_____	_____
	(3) Damage/Defects	Visual/Functional	_____	_____
	b. Fuel/Water Separator	Visual/Functional	_____	_____
	(1) Fuel Hoses, Lines, and Fittings	Visual/Tactile	_____	_____
	(a) Leaks	Visual/Tactile	_____	_____
	(b) Damage/Defects	Visual/Functional	_____	_____
	(2) Water Drained	Visual/Tactile	_____	_____
	c. Tool Stowage Box	Visual/Functional	_____	_____
	(1) Proper Installation	Visual/Tactile	_____	_____
	(2) Door Operation	Visual/Functional	_____	_____
	(3) Damage/Defects	Visual/Tactile	_____	_____
	d. Fender/Splash Guards	Visual/Functional	_____	_____
	(1) Proper Installation	Visual/Tactile	_____	_____
	(2) Cracks and/or Breaks	Visual/Tactile	_____	_____
	(3) Rust and/or Corrosion	Visual/Tactile	_____	_____
	(4) Damage/Defects	Visual/Tactile	_____	_____
	e. Hydraulic Valves and Yaw Cylinder	Visual/Functional	_____	_____
	(1) Proper Installation	Visual/Tactile	_____	_____
	(2) Proper Operation	Visual/Functional	_____	_____
	(3) Damage/Defects	Visual/Tactile	_____	_____
	(4) Seal Leakage	Visual/Tactile	_____	_____

Table 2-3. Post Assembly Inspection Checklist-CONT

Item No.	Parameter	Method of Inspection	Pass	Fail
	(5) Hydraulic Hoses, Lines, and Fittings	Visual/Tactile	_____	_____
	(a) Leaks	Visual/Tactile	_____	_____
	(b) Damage/Defects	Visual/Functional	_____	_____
	f. Trailer Electrical Connector	Visual/Functional	_____	_____
	(1) Proper Installation	Visual/Tactile	_____	_____
	(2) Connections/Operation	Visual/Functional	_____	_____
	(3) Cracks and/or Breaks	Visual/Tactile	_____	_____
	(4) Rust and/or Corrosion	Visual/Tactile	_____	_____
	(5) Damage/Defects	Visual/Tactile	_____	_____
	g. Glad Hands-Service/Emergency	Visual/Functional	_____	_____
	(1) Air Lines, Hoses, and Fittings	Visual/Functional	_____	_____
	(a) Proper Installation	Visual/Tactile	_____	_____
	(b) Damage/Defects	Visual/Functional	_____	_____
	(2) Dummy Couplers	Visual/Functional	_____	_____
	(a) Proper Installation	Visual/Tactile	_____	_____
	(b) Proper Operation	Visual/Functional	_____	_____
	(c) Damage/Defects	Visual/Functional	_____	_____
	(3) Identification Color Codes	Visual/Tactile	_____	_____
	(a) Proper Installation	Visual/Tactile	_____	_____
	(b) Proper Location	Visual	_____	_____
	(c) Damage/Defects	Visual	_____	_____
	h. Cab Rear Window	Visual/Tactile	_____	_____
	(1) Proper Installation	Visual/Tactile	_____	_____

Table 2-3. Post Assembly Inspection Checklist-CONT

Item No.	Parameter	Method of Inspection	Pass	Fail
	h. Cab Rear Window-CONT			
	(2) Cracks and/or Breaks	Visual/Tactile	_____	_____
	(3) Damage/Defects	Visual/Tactile	_____	_____
	i. Spare Tire and Davit	Visual/Functional	_____	_____
	(1) Tire Securely Mounted	Visual/Tactile	_____	_____
	(2) Tire Davit, Winch Cable, and Handle	Visual/Tactile	_____	_____
	(3) Proper Tire Inflation	Visual/Gauge	_____	_____
	j. Drive Shaft/Carrier Bearing	Visual/Functional	_____	_____
	(1) Proper Installation	Visual/Tactile	_____	_____
	(2) Freedom of Movement	Visual/Functional	_____	_____
	(3) Proper Lubrication Fittings	Visual/Functional	_____	_____
	(4) Damage/Defects	Visual/Functional	_____	_____
4.	Exterior Left Side MK48	Visual/Functional	_____	_____
	a. Cab and Vehicle Steps	Visual/Tactile	_____	_____
	(1) Proper Installation	Visual/Tactile	_____	_____
	(2) Cracks and/or Breaks	Visual/Tactile	_____	_____
	(3) Damage/Defects	Visual/Tactile	_____	_____
	b. Reflector and Clearance Light	Visual/Tactile	_____	_____
	(1) Proper Installation	Visual/Tactile	_____	_____
	(2) Cracks and/or Breaks	Visual/Tactile	_____	_____
	(3) Proper Operation	Visual/Functional	_____	_____
	(4) Damage/Defects	Visual/Tactile	_____	_____
	c. Driver's Door	Visual/Functional	_____	_____
	(1) Ease of Operation	Visual/Functional	_____	_____

Table 2-3. Post Assembly Inspection Checklist-CONT

Item No.	Parameter	Method of Inspection	Pass	Fail
	c. Passenger Door-CONT			
	(2) Fit/Seal	Visual/Functional	_____	_____
	(3) Damage/Defects	Visual/Functional	_____	_____
	(4) Window	Visual/Functional	_____	_____
	(a) Proper Installation	Visual/Tactile	_____	_____
	(b) Cracks and/or Breaks	Visual/Tactile	_____	_____
	(c) Proper Operation	Visual/Functional	_____	_____
	(d) Damage/Defects	Visual/Tactile	_____	_____
	(5) Side Mirrors w/Spotters	Visual/Tactile	_____	_____
	(a) Proper Installation	Visual/Tactile	_____	_____
	(b) Cracks and/or Breaks	Visual/Tactile	_____	_____
	(c) Damage/Defects	Visual/Tactile	_____	_____
	d. Tires	Visual/Tactile	_____	_____
	(1) Proper Installation	Visual/Tactile	_____	_____
	(2) Proper Inflation	Visual/Gauge	_____	_____
	(3) Damage/Defects	Visual/Functional	_____	_____
	(a) Cuts	Visual/Tactile	_____	_____
	(b) Gouges	Visual/Tactile	_____	_____
	(c) Excessive Wear	Visual/Tactile	_____	_____
	e. Wheels	Visual/Tactile	_____	_____
	(1) Proper Installation	Visual/Tactile	_____	_____
	(2) Lug Nuts for Looseness	Visual/Tactile	_____	_____
	(3) Damage/Defects	Visual/Tactile	_____	_____

Table 2-3. Post Assembly Inspection Checklist-CONT

Item No.	Parameter	Method of Inspection	Pass	Fail
	f. Steering Linkage, Pitman Arm, Fuse and Drag Links	Visual/Functional	_____	_____
	(1) Proper Installation	Visual/Tactile	_____	_____
	(2) Connections	Visual/Functional	_____	_____
	(3) Freedom of Movement	Visual/Functional	_____	_____
	(4) Proper Lubrication Fittings	Visual/Functional	_____	_____
	(5) Damage/Defects	Visual/Functional	_____	_____
	g. Battery Box Mounting/Slave Connector and Cap	Visual/Tactile	_____	_____
	(1) Proper Installation	Visual/Tactile	_____	_____
	(2) Connections/Operation	Visual/Functional	_____	_____
	(3) Cracks and/or Breaks	Visual/Tactile	_____	_____
	(4) Rust and/or Corrosion	Visual/Tactile	_____	_____
	(5) Damage/Defects	Visual/Tactile	_____	_____
	h. Ether Start System	Visual/Functional	_____	_____
	(1) Proper Installation	Visual/Tactile	_____	_____
	(2) Connections/Leaks	Visual/Functional	_____	_____
	(3) Proper Operation	Visual/Functional	_____	_____
	(4) Damage/Defects	Visual/Functional	_____	_____
	i. Fuel Tank	Visual/Tactile	_____	_____
	(1) Proper Installation	Visual/Tactile	_____	_____
	(2) Connections	Visual/Tactile	_____	_____
	(3) Cracks and/or Breaks	Visual/Tactile	_____	_____
	(4) Rust and/or Corrosion	Visual/Tactile	_____	_____
	(5) Damage/Defects	Visual/Tactile	_____	_____

Table 2-3. Post Assembly Inspection Checklist-CONT

Item No.	Parameter	Method of Inspection	Pass	Fail
	j. Wheel Chock Frame	Visual/Tactile	_____	_____
	(1) Proper Installation	Visual/Tactile	_____	_____
	(2) Cracks and/or Breaks	Visual/Tactile	_____	_____
	(3) Damage/Defects	Visual/Tactile	_____	_____
	k. Yaw Cylinder	Visual/Functional	_____	_____
	(1) Proper Installation	Visual/Tactile	_____	_____
	(2) Proper Operation	Visual/Functional	_____	_____
	(3) Damage/Defects	Visual/Tactile	_____	_____
	(4) Seal Leakage	Visual/Tactile	_____	_____
	(5) Hydraulic Hoses, Lines, and Fittings	Visual/Tactile	_____	_____
	(a) Leaks	Visual/Tactile	_____	_____
	(b) Damage/Defects	Visual/Functional	_____	_____
	l. Air Tank/Quick Disconnect	Visual/Functional	_____	_____
	(1) Proper Installation	Visual/Tactile	_____	_____
	(2) Connections/Operation	Visual/Functional	_____	_____
	(3) Cracks and/or Breaks	Visual/Tactile	_____	_____
	(4) Rust and/or Corrosion	Visual/Tactile	_____	_____
	(5) Damage/Defects	Visual/Tactile	_____	_____
	(6) Air Lines, Hoses, and Fittings	Visual/Functional	_____	_____
	(a) Proper Installation	Visual/Tactile	_____	_____
	(b) Damage/Defects	Visual/Functional	_____	_____
5.	Top of MK48	Visual/Functional	_____	_____

Table 2-3. Post Assembly Inspection Checklist-CONT

Item No.	Parameter	Method of Inspection	Pass	Fail
	a. Engine Compartment	Visual/Functional	_____	_____
	(1) Panel Hinges	Visual/Functional	_____	_____
	(a) Proper Installation	Visual/Tactile	_____	_____
	(b) Proper Operation	Visual/Functional	_____	_____
	(c) Cracks and/or Breaks	Visual/Tactile	_____	_____
	(d) Rust and/or Corrosion	Visual/Tactile	_____	_____
	(e) Damage/Defects	Visual/Tactile	_____	_____
	(2) Fuel Line Connections	Visual/Functional	_____	_____
	(a) Proper Installation	Visual/Tactile	_____	_____
	(b) Connections/Leaks	Visual/Tactile	_____	_____
	(c) Cracks and/or Breaks	Visual/Tactile	_____	_____
	(d) Rust and/or Corrosion	Visual/Tactile	_____	_____
	(e) Damage/Defects	Visual/Tactile	_____	_____
	(f) Fuel Hoses, Lines, and Fittings	Visual/Tactile	_____	_____
	1 Leaks	Visual/Tactile	_____	_____
	2 Damage/Defects	Visual/Functional	_____	_____
	(3) Electrical Connections	Visual/Functional	_____	_____
	(a) Proper Installation	Visual/Tactile	_____	_____
	(b) Connections/Operation	Visual/Functional	_____	_____
	(c) Cracks and/or Breaks	Visual/Tactile	_____	_____
	(d) Rust and/or Corrosion	Visual/Tactile	_____	_____
	(e) Damage/Defects	Visual/Tactile	_____	_____
	(4) Air Line Connections	Visual/Functional	_____	_____
	(a) Proper Installation	Visual/Tactile	_____	_____

Table 2-3. Post Assembly Inspection Checklist-CONT

Item No.	Parameter	Method of Inspection	Pass	Fail
	(4) Air Line Connections-CONT			
	(b) Cracks and/or Breaks	Visual/Tactile	_____	_____
	(c) Rust and/or Corrosion	Visual/Tactile	_____	_____
	(d) Damage/Defects	Visual/Tactile	_____	_____
	(e) Air Lines, Hoses, and Fittings	Visual/Functional	_____	_____
	1 Proper Installation	Visual/Tactile	_____	_____
	2 Leaks	Visual/Tactile	_____	_____
	3 Damage/Defects	Visual/Functional	_____	_____
	(5) Turbocharger Lines and Fittings	Visual/Functional	_____	_____
	(a) Proper Installation	Visual/Tactile	_____	_____
	(b) Cracks and/or Breaks	Visual/Tactile	_____	_____
	(c) Rust and/or Corrosion	Visual/Tactile	_____	_____
	(d) Damage/Defects	Visual/Tactile	_____	_____
	(e) Lines, Hoses, and Fittings	Visual/Functional	_____	_____
	1 Proper Installation	Visual/Tactile	_____	_____
	2 Leaks	Visual/Tactile	_____	_____
	3 Damage/Defects	Visual/Functional	_____	_____
	(6) Air Compressor Lines and Fittings	Visual/Functional	_____	_____
	(a) Proper Installation	Visual/Tactile	_____	_____
	(b) Cracks and/or Breaks	Visual/Tactile	_____	_____
	(c) Rust and/or Corrosion	Visual/Tactile	_____	_____
	(d) Damage/Defects	Visual/Tactile	_____	_____

Table 2-3. Post Assembly Inspection Checklist-CONT

Item No.	Parameter	Method of Inspection	Pass	Fail
	(6) Air Compressor Lines and Fittings-CONT			
	(e) Lines, Hoses, and Fittings	Visual/Functional	____	____
	1 Proper Installation	Visual/Tactile	____	____
	2 Leaks	Visual/Tactile	____	____
	3 Damage/Defects	Visual/Functional	____	____
	(7) Governor Housing and Emergency Stop	Visual/Functional	____	____
	(a) Proper Installation	Visual/Tactile	____	____
	(b) Proper Operation	Visual/Functional	____	____
	(c) Cracks and/or Breaks	Visual/Tactile	____	____
	(d) Rust and/or Corrosion	Visual/Tactile	____	____
	(e) Damage/Defects	Visual/Tactile	____	____
	(8) Radiator	Visual/Functional	____	____
	(a) Proper Installation	Visual/Tactile	____	____
	(b) Leaks	Visual/Tactile	____	____
	(c) Cracks and/or Breaks	Visual/Tactile	____	____
	(d) Rust and/or Corrosion	Visual/Tactile	____	____
	(e) Proper Water Level	Visual/Tactile	____	____
	(f) Damage/Defects	Visual/Tactile	____	____
	(9) Fan and Fan Motor	Visual/Functional	____	____
	(a) Proper Installation	Visual/Tactile	____	____
	(b) Proper Operation	Visual/Functional	____	____
	(c) Cracks and/or Breaks	Visual/Tactile	____	____
	(d) Rust and/or Corrosion	Visual/Tactile	____	____

Table 2-3. Post Assembly Inspection Checklist-CONT

Item No.	Parameter	Method of Inspection	Pass	Fail
	(9) Fan and Fan Motor-CONT			
	(e) Damage/Defects	Visual/Tactile	_____	_____
	(f) Hydraulic Lines, Hoses, and Fittings	Visual/Functional	_____	_____
	1 Proper Installation	Visual/Tactile	_____	_____
	2 Leaks	Visual/Tactile	_____	_____
	3 Damage/Defects	Visual/Functional	_____	_____
	(10) Blower Housing	Visual/Tactile	_____	_____
	(a) Cracks and/or Breaks	Visual/Tactile	_____	_____
	(b) Corrosion	Visual/Tactile	_____	_____
	(c) Damage/Defects	Visual/Tactile	_____	_____
	(11) Alternator	Visual/Functional	_____	_____
	(a) Proper Installation	Visual/Tactile	_____	_____
	(b) Connections/Operation	Visual/Functional	_____	_____
	(c) Cracks and/or Breaks	Visual/Tactile	_____	_____
	(d) Rust and/or Corrosion	Visual/Tactile	_____	_____
	(e) Damage/Defects	Visual/Tactile	_____	_____
	(12) Engine	Visual/Functional	_____	_____
	(a) Proper Installation	Visual/Tactile	_____	_____
	(b) Connections/Operation	Visual/Functional	_____	_____
	(c) Proper Oil Level	Visual/Gauge	_____	_____
	(d) Rust and/or Corrosion	Visual/Tactile	_____	_____
	(e) Leaks	Visual/Tactile	_____	_____
	(f) Damage/Defects	Visual/Tactile	_____	_____

Table 2-3. Post Assembly Inspection Checklist-CONT

Item No.	Parameter	Method of Inspection	Pass	Fail
	(13) Transmission			
	(a) Proper Installation	Visual/Tactile	_____	_____
	(b) Connections/Operation	Visual/Functional	_____	_____
	(c) Proper Oil Level	Visual/Gauge	_____	_____
	(d) Rust and/or Corrosion	Visual/Tactile	_____	_____
	(e) Leaks	Visual/Tactile	_____	_____
	(f) Damage/Defects	Visual/Tactile	_____	_____
	b. Air Cleaner	Visual/Functional	_____	_____
	(1) Proper Installation	Visual/Tactile	_____	_____
	(2) Proper Operation	Visual/Functional	_____	_____
	(3) Damage/Defects	Visual/Tactile	_____	_____
	(4) Lines, Hoses, and Fittings	Visual/Functional	_____	_____
	(a) Proper Installation	Visual/Tactile	_____	_____
	(b) Leaks	Visual/Tactile	_____	_____
	(c) Damage/Defects	Visual/Functional	_____	_____
6.	Underside of MK48			
	a. Leaf Springs and Torque Rods	Visual/Functional	_____	_____
	(1) Proper Installation	Visual/Tactile	_____	_____
	(2) Damage/Defects	Visual/Functional	_____	_____
	b. Propeller Shafts and Universal Joints	Visual/Functional	_____	_____
	(1) Proper Installation	Visual/Tactile	_____	_____
	(2) Connections	Visual/Tactile	_____	_____
	(3) Damage/Defects	Visual/Functional	_____	_____

Table 2-3. Post Assembly Inspection Checklist-CONT

Item No.	Parameter	Method of Inspection	Pass	Fail
	c. Axles No. 1 and No. 2	Visual/Functional	____	____
	(1) Proper Installation	Visual/Tactile	____	____
	(2) Proper Lubricant Level	Visual/Tactile	____	____
	(3) Breather Caps	Visual/Functional	____	____
	(a) Free of Dirt	Visual/Tactile	____	____
	(b) Damage/Defects	Visual/Functional	____	____
	(4) Input/Output Shafts	Visual/Functional	____	____
	(a) Leaks	Visual/Tactile	____	____
	(b) Damage/Defects	Visual/Functional	____	____
	(5) Air Brake Chambers	Visual/Functional	____	____
	(a) Proper Installation	Visual/Tactile	____	____
	(b) Proper Operation	Visual/Functional	____	____
	(c) Damage/Defects	Visual/Functional	____	____
	(6) Front Axle Steering Stops	Visual/Functional	____	____
	(a) Proper Installation	Visual/Tactile	____	____
	(b) Proper Operation	Visual/Functional	____	____
	(c) Damage/Defects	Visual/Tactile	____	____
	(7) Shock Absorbers	Visual/Tactile	____	____
	(a) Proper Installation	Visual/Tactile	____	____
	(b) Proper Operation	Visual/Functional	____	____
	(c) Leaks	Visual/Tactile	____	____
	(d) Damage/Defects	Visual/Tactile	____	____
	(8) Air Lines, Hoses, and Fittings	Visual/Functional	____	____
	(a) Proper Installation	Visual/Tactile	____	____

Table 2-3. Post Assembly Inspection Checklist-CONT

Item No.	Parameter	Method of Inspection	Pass	Fail
	(8) Air Lines, Hoses, and Fittings-CONT			
	(b) Leaks	Visual/Tactile	_____	_____
	(c) Damage/Defects	Visual/Functional	_____	_____
	d. Transfer Case	Visual/Functional	_____	_____
	(1) Proper Installation	Visual/Tactile	_____	_____
	(2) Proper Lubricant Level	Visual/Tactile	_____	_____
	(3) Breather Caps	Visual/Functional	_____	_____
	(a) Free of Dirt	Visual/Tactile	_____	_____
	(b) Damage/Defects	Visual/Functional	_____	_____
	(4) Input/Output Shafts	Visual/Functional	_____	_____
	(a) Leaks	Visual/Tactile	_____	_____
	(b) Damage/Defects	Visual/Functional	_____	_____
	e. Glad Hands-Service/Emergency	Visual/Functional	_____	_____
	(1) Air Lines, Hoses, and Fittings	Visual/Functional	_____	_____
	(a) Proper Installation	Visual/Tactile	_____	_____
	(b) Damage/Defects	Visual/Functional	_____	_____
	(2) Dummy Couplers	Visual/Functional	_____	_____
	(a) Proper Installation	Visual/Tactile	_____	_____
	(b) Proper Operation	Visual/Functional	_____	_____
	(c) Damage/Defects	Visual/Functional	_____	_____
	(3) Identification Color Codes	Visual/Tactile	_____	_____
	(a) Proper Installation	Visual/Tactile	_____	_____
	(b) Proper Location	Visual	_____	_____
	(c) Damage/Defects	Visual	_____	_____

Table 2-3. Post Assembly Inspection Checklist-CONT

Item No.	Parameter	Method of Inspection	Pass	Fail
	f. Hydraulic Hoses, Lines, and Fittings	Visual/Tactile	_____	_____
	(1) Leaks	Visual/Tactile	_____	_____
	(2) Damage/Defects	Visual/Functional	_____	_____
	g. Cab Mounting Biscuits	Visual/Tactile	_____	_____
	(1) Proper Installation	Visual/Tactile	_____	_____
	(2) Dry Rot	Visual/Tactile	_____	_____
	(3) Damage/Defects	Visual/Tactile	_____	_____
7.	Cab Lights (Operational)	Visual/Functional	_____	_____
	a. Dash Panel Gauges	Visual/Functional	_____	_____
	(1) Proper Installation	Visual/Tactile	_____	_____
	(2) Proper Operation	Visual/Functional	_____	_____
	(3) Damage/Defects	Visual/Tactile	_____	_____
	b. Shift Selector	Visual/Functional	_____	_____
	(1) Proper Installation	Visual/Tactile	_____	_____
	(2) Proper Operation	Visual/Functional	_____	_____
	(3) Damage/Defects	Visual/Tactile	_____	_____
	c. Dome Light	Visual/Functional	_____	_____
	(1) Proper Installation	Visual/Tactile	_____	_____
	(2) Proper Operation	Visual/Functional	_____	_____
	(3) Damage/Defects	Visual/Tactile	_____	_____
	d. Headlights (High/Low Beam)	Visual/Functional	_____	_____
	(1) Proper Installation	Visual/Tactile	_____	_____
	(2) Proper Operation	Visual/Functional	_____	_____
	(3) Damage/Defects	Visual/Tactile	_____	_____

Table 2-3. Post Assembly Inspection Checklist-CONT

Item No.	Parameter	Method of Inspection	Pass	Fail
	e. Clearance and Side Marker Lights	Visual/Functional	_____	_____
	(1) Proper Installation	Visual/Tactile	_____	_____
	(2) Proper Operation	Visual/Functional	_____	_____
	(3) Damage/Defects	Visual/Tactile	_____	_____
	f. Turn Signals (Left/Right, Front/Rear)	Visual/Functional	_____	_____
	(1) Proper Installation	Visual/Tactile	_____	_____
	(2) Proper Operation	Visual/Functional	_____	_____
	(3) Damage/Defects	Visual/Tactile	_____	_____
	g. Emergency Flashers	Visual/Functional	_____	_____
	(1) Proper Installation	Visual/Tactile	_____	_____
	(2) Proper Operation	Visual/Functional	_____	_____
	(3) Damage/Defects	Visual/Tactile	_____	_____
	h. Blackout Lights	Visual/Functional	_____	_____
	(1) Proper Installation	Visual/Tactile	_____	_____
	(2) Proper Operation	Visual/Functional	_____	_____
	(3) Damage/Defects	Visual/Tactile	_____	_____
	i. Work Lights (Wrecker and Tractor Only)	Visual/Functional	_____	_____
	(1) Proper Installation	Visual/Tactile	_____	_____
	(2) Proper Operation	Visual/Functional	_____	_____
	(3) Damage/Defects	Visual/Tactile	_____	_____

Table 2-3. Post Assembly Inspection Checklist - CONT

Item No.	Parameter	Method of Inspection	Pass	Fail
	j. Beacon Light (Wrecker Only)	Visual/Functional	_____	_____
	(1) Proper Installation	Visual/Tactile	_____	_____
	(2) Proper Operation	Visual/Functional	_____	_____
	(3) Damage/Defects	Visual/Tactile	_____	_____
	k. Hi-Pressure Filter*	Visual/Functional	_____	_____
	(1) Hoses/Fittings*	Visual/Tactile	_____	_____
	(2) Leaks*	Visual/Tactile	_____	_____
	(3) Damage/Defects*	Visual/Tactile	_____	_____
8.	Horns (Electric and Air)	Visual/Functional	_____	_____
	a. Proper Installation	Visual/Tactile	_____	_____
	b. Proper Operation	Visual/Functional	_____	_____
	c. Damage/Defects	Visual/Tactile	_____	_____
9.	Cab Interior Trim	Visual/Tactile	_____	_____
	a. Sun Visors	Visual/Tactile	_____	_____
	(1) Proper Installation	Visual/Tactile	_____	_____
	(2) Free Movement	Visual/Functional	_____	_____
	(3) Damage/Defects	Visual/Tactile	_____	_____
	b. Seats			
	(1) Proper Installation	Visual/Tactile	_____	_____
	(2) Proper Operation	Visual/Functional	_____	_____
	(3) Cushions (Dry Rot/Mildew)	Visual/Tactile	_____	_____
	(4) Damage/Defects	Visual/Tactile	_____	_____
	c. Seat Belts			
	(1) Proper Installation	Visual/Tactile	_____	_____
	(2) Proper Operation	Visual/Functional	_____	_____
	(3) Damage/Defects	Visual/Tactile	_____	_____

* LVSA1 Series Vehicles Only

Section IX. ROAD TEST AND FINAL INSPECTION

2-463. ROAD TEST AND FINAL INSPECTION

a. Inspection and Testing Instructions

(1) Each Power Unit, Front, 12-1/2 Ton, 4x4, MK48, Mod 0 overhauled or IROAN repaired according to this DMM shall be fully inspected, operationally tested, and certified to be complete with all discrepancies corrected.

(2) Deficiency record, check-off of deficiencies, corrected records, written inspection logs, and final inspection records shall be maintained and become the permanent record of the end item.

(3) Quality Control personnel shall ensure all Modification Instructions (MI's) and Technical Instructions (TI's) applicable to the MK48, as of the date of overhaul, have been applied to the MK48 to be inspected.

b. Inspection Safety Check

(1) An inspection safety check shall be accomplished prior to MK48 operation.

(2) Under no circumstances will an inspector accept a vehicle for operational test when, due to certain apparent discrepancies, it may be hazardous to operate the vehicle.

(3) The inspector will make a visual check and prepare a written check-off to determine the MK48's readiness for inspection by noting the following:

(a) Tires properly inflated

(b) All systems free of leaks

(c) Brake system functions properly

(d) Hydraulic system functions properly

(e) Electrical system functions properly

1	Service taillight	R _____	L _____
2	Service stop light	R _____	L _____
3	Blackout taillight	R _____	L _____
4	Blackout stop light	R _____	L _____
5	Turn indicator	R _____	L _____
6	Clearance and marker lights	R _____	L _____

c. Road Test and Final Inspection Requirements. After the vehicle has been released to the inspector for road test and final inspection, he will make a visual check of items noted in Paragraph 2-463b(3). In addition, the following items will be checked prior to road test.

(1) Trailer properly secured to MK48

(2) Intervehicular electrical cables connected properly

(3) Intervehicular air lines connected properly

(4) Intervehicular hydraulic lines connected properly

d. Road tests shall be performed on smooth, level, hard-surfaced roads at sustained speeds without incurring damage to the MK48 or prime mover.

e. The vehicle shall be completely assembled and serviced, but need not be pay loaded.

f. A Road Test and Final Inspection Checklist sheet shall be completed.

g. Each characteristic listed shall be inspected to ensure controllability of the vehicle combination. Inspect the MK48 according to Table 2-4.

Table 2-4. Road Test and Final Inspection Checklist

Item No.	Parameter	Requirement	Method of Inspection	Pass	Fail
1.	Engine Oil Level	Engine oil level should read between the "L" and "F" marks on the engine oil dipstick.	Visual/ Functional	____	____
2.	Engine Coolant Level	Engine coolant should be seen in sight glass on radiator. Add coolant to radiator if not showing in sight glass. Refer to TM 2320-10/11.	Visual/ Functional	____	____
3.	Hydraulic Fluid Level	Hydraulic fluid level should be between "Add" and "Full" marks in sight glass on hydraulic reservoir.	Visual/ Functional	____	____
4.	Fuel/Water Separator	Check fuel/water separator for water in sediment bowl.	Visual/ Functional	____	____
5.	Engine Idle	690 RPM plus (+) or minus (-) 50 RPM	Visual/ Functional	____	____

Table 2-4. Road Test and Final Inspection Checklist-CONT

Item No.	Parameter	Requirement	Method of Inspection	Pass	Fail
6.	Engine Oil Pressure	Idle - Ensure engine oil pressure light goes out after engine starts.	Visual/ Functional	_____	_____
		1800 to 2100 RPM - 49 to 70 psi (34.4 to 482.6 kPa)	Visual/ Functional	_____	_____
7.	Low Air Pressure Buzzer (Brake System)	Low air pressure buzzer will stay on until air pressure in brake system reaches 60 psi (413.7 kPa)	Visual/ Functional	_____	_____
8.	Air Cleaner Restriction Indicator	Ensure air restriction indicator is showing yellow for clean condition.	Visual/ Functional	_____	_____
9.	Battery Voltage	24 to 28 volts	Visual/ Functional	_____	_____
10.	Axle Lockout Strut and Sensor	Ensure lockout struts are in proper position. Lockout strut Warning/ Indicator light is orange when lockout struts are in place.	Visual/ Functional	_____	_____
11.	Fuel Level Gauge	Fuel level gauge must register equivalent to tank level.	Visual/ Functional	_____	_____
12.	Water Temperature (after warmup)	160 to 197 °F (71 °C to 91.6 °C)	Visual/ Functional	_____	_____
13.	Transmission Temperature (after warmup)	160 to 200 °F (71 °C to 93.3 °C)	Visual/ Functional	_____	_____
14.	Transmission Oil Level	Check transmission oil level with engine running and transmission in neutral. If transmission tempera ture is below 160 °F (71 °C), fluid level should be in "COLD RUN" area; if above 160 °F (71 °C), fluid level should be in "HOT RUN" area.	Visual/ Functional	_____	_____

Table 2-4. Road Test and Final Inspection Checklist-CONT

Item No.	Parameter	Requirement	Method of Inspection	Pass	Fail
15.	Windshield Washer	Check windshield washers for proper operation and adjustment.	Visual/ Functional	____	____
16.	Windshield Wipers	Check windshield wipers for proper operation and travel.	Visual/ Functional	____	____
17.	Heater/Defroster Fan	Check heater/defroster fan for proper operation.	Visual/ Functional	____	____
18.	Heater	Check heater for proper operation.	Visual/ Functional	____	____
19.	Defroster	Check defroster fan for proper operation.	Visual/ Functional	____	____
20.	Trailer Brake Control	Ensure trailer brake control operates and applies brakes properly.	Visual/ Functional	____	____
21.	Throttle Treadle Valve	Ensure throttle treadle valve allows smooth acceleration. No binding or sticking is permitted.	Visual/ Functional	____	____
22.	Transmission	Ensure forward and reverse operation, smooth shifting, and check for unusual noises.	Visual/ Functional	____	____
23.	Transfer Case	Ensure high and low range operation, drive line lockup operation, and check for unusual noises.	Visual/ Functional	____	____
24.	Drive Train	Check for unusual noises and excessive vibration. Unusual noises and excessive vibration are not permitted.	Visual/ Functional	____	____

Table 2-4. Road Test and Final Inspection Checklist-CONT

Item No.	Parameter	Requirement	Method of Inspection	Pass	Fail
25.	Steering	Ensure steering operation is smooth and does not pull or wander.	Visual/ Functional	_____	
26.	Exhaust System	Ensure exhaust system is secured properly and free from excessive vibration. Check for excessive smoke.	Visual/ Functional	_____	
27.	Parking Brake	Ensure parking brake holds with transmission in gear and releases brakes fully.	Visual/ Functional	_____	
28.	Service Brakes	Service brakes shall be tested to the extent necessary to ensure proper operation and performance. The service brakes of the MK48 Power Unit, Front and trailer combination shall control, decelerate, and stop the MK48/trailer combination on dry, hard, level, smooth ground. Application of brakes on all wheels of the MK48 and trailer shall be concurrent.	Visual/ Functional/ Tactile	_____	
29.	Wheels and Hubs	Wheels and hubs shall be free of wobble and noise.	Functional/ Audible	_____	
30.	Abnormal Heating	Wheels, hubs, and brakes shall be free of abnormal heating conditions.	Functional/ Tactile	_____	
31.	Leaks (Brakes On)	Brake air system, wheel hubs, and tires shall be free of leaks.	Functional/ Visual/ Gauge	_____	

Table 2-4. Road Test and Final Inspection Checklist-CONT

Item No.	Parameter	Requirement	Method of Inspection	Pass	Fail
32.	Lamp Operational Test	Service stop lamp, service taillamp, blackout stop lamp, blackout taillamp, clearance lamps, and turn indicators shall operate properly and be free from defects.	Visual/ Functional	_____	_____
33.	Seals Check	Bearings shall be checked after five-mile road test for lubricating leakage and dirt contamination.	Visual/ Functional/ Tactile	_____	_____
34.	Controls Check	All controls shall be operated and checked for functional requirements.	Visual/ Functional/ Tactile	_____	_____
35.	Adjustment Mechanism Check	All electrical, mechanical, and pneumatic adjustment mechanisms shall be checked for proper adjustment and shall be adjusted if required.	Visual/ Functional/ Tactile	_____	_____
36.	Tire and Tube Check	All tires and tubes shall be checked for mounting, installation, and conformance to requirements as specified.	Visual/ Functional	_____	_____
37.	Painting, Marking, and Data Plate Check	Painting, marking, and service data plate shall be inspected for conformance to specifications and any special requirements.	Visual/ Functional	_____	_____
38.	Trailing Ability	The MK48, Power Unit, Front shall pull all trailers in a straight line without weaving from side to side, without causing damage to vehicles or cargo, and without losing control of the vehicle combination.	Visual/ Functional	_____	_____

Table 2-4. Road Test and Final Inspection Checklist-CONT

Item No.	Parameter	Requirement	Method of Inspection	Pass	Fail
39.	Cleaning and Drying Specification	Exterior surfaces of vehicle shall be free of dirt, grease, and any other contaminants. Exposed surfaces, to which application of preservative is specified, shall be cleaned and dried with applicable process procedures to accomplish cleaning without damage to the item.	Visual/Tactile	_____	_____

APPENDIX A

REFERENCES

A-1. PUBLICATION INDEX. The following index should be consulted frequently for the latest changes and revisions in the referenced index, and for new publications relating to information in this DMM.

SL-1-2	Marine Corps Index of Authorized Publications for Equipment Support

A-2. OTHER PUBLICATIONS. The following publications contain information pertinent to major items, materials, and associated equipment of the Power Unit, Front, 12-1/2 Ton, 4x4, MK48, Mod 0.

Equipment Publications:

LI 2320-12/9	Lubrication Instruction, Trucks, 22-1/2 Ton, 8x8, Logistics Vehicle System (LVS)
SB 740-98-1 PCN 311 006085 00	Storage Serviceability Standard: Tracked Vehicles, Wheeled Vehicles, and Component Parts
SL-3-08780 PCN 123 087800 00	Components List for Power Unit, Front, 12-1/2 Ton, 4x4, MK48, Mod 0
TB 9-2300-247-40 PCN 312 077000 00	Tactical Wheeled Vehicles: Repair of Frames
TB 43-0213	Rustproofing, Procedures for
TI 4731-14/1	The U. S. Marine Corps Oil Analysis Program
TI 11240-50/9	Inspection/Repair Standards for Tactical Motor Transport Vehicles
TM 2320-10/11	Operators Manual for Logistics Vehicle System (Diesel)
TM 2320-20/12	Organizational Maintenance for Trucks, 22-1/2 Ton, 8x8, Logistics Vehicle System (Diesel)
TM 2320-24P/14	Organizational, Direct Support, and General Support Maintenance Repair Parts and Special Tools List
TM 2320-34/13	Direct Support and General Support Maintenance for Trucks, 22-1/2 Ton, 8x8, Logistics Vehicle System (Diesel)

REFERENCES-CONT

TM 2350-45 PCN 182 022000 00	DMA Standard Procedures Intermediate and Depot, U. S. Marine Corps Technical Manual
TM 3080-50 PCN 182 030805 00	Corrosion Control Procedures, Depot Maintenance Activities for Marine Corps Equipment
TM 4750-15/1	Painting and Registration Marking for Marine Corps Combat and Tactical Equipment
TM 750-254	Cooling Systems: Tactical Vehicles
TM 9-214	Inspection, Care, and Maintenance of Anti-Friction Bearings
TM 9-237	Operator's Manual; Welding Theory and Application
TM 9-2610-200-24	Care, Maintenance, and Repair of Pneumatic Tires and Inner Tubes
TM 9-2610-200-34	Pneumatic Tires and Inner Tubes
TM 9-2610-201-14	Standards and Criteria for Technical Inspection and Classification of Tires
TM 9-4940-544-14/P	Operator, Organizational, Direct Support, and General Support Maintenance Manual including Repair Parts List for Repair Kit Hose Assembly
TM 9-6140-200-14	Operator's, Unit, Intermediate Direct Support and Intermediate General Support Maintenance Manual for Lead-Acid Storage Batteries
TO-42C2-1-7	Electrodeposition of Metal's and Metal Surface Treatments to Meet Air Force Maintenance Requirements

Military Specifications:

DOD-P-16232	Phosphate Coating, Heavy, Manganese, or Zinc Base
DOD-STD-1866	Soldering Process General (Non Electrical)
MIL-STD-480	Configuration Control - Engineering Changes, Deviations and Waivers

REFERENCES-CONT

MIL-A-907	Antiseize Thread Compound, High Temperature
MIL-A-46106	Adhesive-Sealants, Silicone, RTV, General Purpose
MIL-A-5092	Adhesive, Rubber Base, General Purpose
MIL-C-450	Coating Compound, Bituminous Solvent Type, Black
MIL-C-5541	Chemical Conversion Coatings on Aluminum and Aluminum Alloys
MIL-C-10578	Corrosion Removing and Metal Conditioning Compound (Phosphoric Acid Base)
MIL-C-28998	Cleaner-Dryer: Electronic Test Equipment, Portable
MIL-C-43616	Cleaning Compounds, Aircraft Surface
MIL-C-46156	Corrosion Removing Compound, Sodium Hydroxide Base for Ferrous Metals
MIL-C-46168	Coating, Aliphatic Polyurethane, Chemical Agent Resistant
MIL-C-53039	Coating, Aliphatic Polyurethane, Single Component, Chemical Agent Resistant
MIL-C-81706	Chemical Conversion Materials for Coating Aluminum and Aluminum Alloys
MIL-D-16791	Detergent, General Purpose
MIL-D-45950	Degreaser, Vapor Spray, Stationary, Solvent Type, Steam or Electrically Heated
MIL-G-822	Gloves, Men's and Women's, Light Duty
MIL-G-9954	Glass Beads: For Cleaning and Peening
MIL-G-10924	Grease, Automotive and Artillery
MIL-G-23549	Grease, General Purpose
MIL-G-81322	Grease, Aircraft, General Purpose, Wide Temperature Range

REFERENCES-CONT

MIL-HDBK-205	Phosphate and Black Oxide Coating of Ferrous Metals
MIL-I-15126	Insulation Tape, Electrical Pressure Sensitive Adhesive, and Pressure Sensitive Thermosetting Adhesive
MIL-L-2104	Lubricating Oil, Internal Combustion Engine, Tactical Service
MIL-L-46152	Lubricating Oil, Internal Combustion Engine, Administrative Service
MIL-P-116	Preservation, Methods of
MIL-P-4556	Coating Kit, Epoxy, for Interior of Steel Fuel Tanks
MIL-P-15024	Plates, Tags, and Bands for Identification of Equipment
MIL-P-50002	Phosphate Coating Compounds for Phosphating Ferrous Metals
MIL-P-52192	Primer Coating, Epoxy
MIL-R-46116	Remover, Paint, Solvent Type, for Multiple Coat and Resistant Systems (Including Epoxies)
MIL-S-851	Steel Grit Shot And Cut Wire Shot; and Iron Grit and Shot-Blast Cleaning and Peening
MIL-S-46163	Sealing Lubricating and Wicking Compounds, Thread-Locking, Anaerobic, Single-Component
MIL-STD-105	Sampling Procedures and Tables for Inspection by Attributes
MIL-STD-171	Metal and Wood Surfaces, Finishing of
MIL-T-704	Materials, Treatment and Painting of

Federal Specifications:

L-F-36	Face Shield, Industrial
O-C-303	Chromium Trioxide, Technical

REFERENCES-CONT

O-T-620	1,1,1-Trichloroethane, Technical, Inhibited
P-D-680	Solvent, Dry Cleaning
QQ-C-320	Chromium Plating (Electrodeposited)
Title 29	Code of Federal Regulations, Occupational Safety and Health Act, Part 1910
Title 40	Code of Federal Regulations, Protection of the Environment
TT-C-490	Ferrous Surfaces and Pre-Treatments for Organic Coatings, Cleaning Methods for
TT-I-735	Alcohol, Isopropyl
ZZ-G-381	Gloves, Rubber, Industrial

Marine Corps Orders:

MCO P5215.17	The Marine Corps Technical Publication System

APPENDIX B

LIST OF MATERIALS

B.1. LIST OF MATERIALS. The following is a list of materials required during overhaul of the Power Unit, Front, 12-1/2 Ton, 4x4, MK48, MOD 0.

1. 1,1,1-Trichloroethane, Technical, Inhibited, FED SPEC O-T-620, NSN 6810-00-551-1487
2. Abrasive, Steel, 80 Grit, MIL-S-851, Type 1, NSN 5350-00-107-1284
3. Adhesive-Sealants, Silicone, RTV, General Purpose, MIL-A-46106
4. Adhesive, Rubber Base, General Purpose, MIL-A-5092

4.1. Adhesive, Weatherstrip (45152) 32167-AX)

5. Antiseize Thread Compound, High Temperature, MIL-A-907
6. Barrier Material, Grease, NSN 8135-00-543-6574

6.1. Biobor JF MIL-S-53021

7. Chemical Conversion Coating for Aluminum, MIL-C-81706. Class 1A or 3, Form I, II, and III
8. Chromium Trioxide, Technical, FED SPEC O-C 303, NSN 6810-00-264-3939
9. Chromium Plating (Electrodeposited), QQ-C-320
10. Cleaner-Dryer, Electronic Test Instrument, Portable, MIL-C-28998
11. Cleaner, Glass, Regular, Type 1, Class 1, NSN 7930-00-664-6910
12. Cleaner, Heavy Duty Radiator, NSN 6850-00-911-2429
13. Cleaning Compound, Aircraft Surface, MIL-C-43616, NSN 6850-01-045-7931
14. Coating, Allphatic, Polyurethane, Chemical Agent Resistant, MIL-C-46168
15. Coating, Allphatic Polyurethane, Single Component, Chemical Agent Resistant, MIL-C-53039
16. Coating Compound, Bituminous Solvent Type, Black, MIL-C-450
17. Coating Kit, Epoxy, for Interior of Steel Fuel Tanks, MIL-P-4556
18. Corrosion Removing and Metal Conditioning Compound (Phosphoric Acid Base), MIL-C-10578, NSN 6850-00-656-1291
19. Corrosion Removing Compound, Sodium Hydroxide Base For Ferrous Metals, MIL-C-46156, NSN 6850-00-935-5853

19.1. Compound, Corrosion Preventive (45152) 1388330

19.2. Compound, Silicone (72984) DCIII, NSN 6850-00-294-0860

20. Degreaser, Vapor Spray, Stationary, Solvent Type, Steam or Electrically-Heated, MIL-D-45950
21. Detergent, General Purpose, MIL-D-16791, Type 1, NSN 7930-00-282-9699
22. Dry Cleaning Solvent, FED SPEC P-D-680, NSN 6850-00-285-8011

22.1. Electricor VCI-238 (44695)

LIST OF MATERIALS-CONT

23. Face Shield, Industrial, FED SPEC L-F-36

24. Glass Beads, MIL-G-9954, Size 8, NSN 5350-00-012-1869
25. Gloves, Men's and Women's, Light Duty, MIL-G-822, NSN 8415-00-268-7870
26. Grease, Automotive and Artillery, MIL-G-10924
27. Grease, Aircraft, General Purpose, Wide Temperature Range, MIL-G-81322, NSN 9150-00-935-5851
28. Grease, General Purpose, MIL-G-23549
29. Isopropyl Alcohol, FED SPEC TT-I-735, NSN 6810-00-855-6160
30. Lithium Grease, Lubriplate 555
31. Loctite 592, Sealant, Pipe, NSN 8030-01-054-0740
32. Lubricant, Greaseless, NSN 6850-00-A14-5882
33. Lubricating Oil, Internal Combustion Engine, Administrative Service, MIL-L-46152
34. Lubricating Oil, Internal Combustion Engine, Tactical Service, MIL-L-2104
35. Phosphate Coating Compounds for Phosphating Ferrous Metals, MIL-P-50002, NSN 6850-00-573-7050
36. Phosphate Coating, Heavy, Manganese or Zinc Base, DOD-P-16232
37. Primer Coating Epoxy, MIL-P-52192, NSN 8010-00-082-1714
38. Remover, Paint, Solvent Type, for Multiple Coat and Resistant Systems (Including Epoxies), MIL-R-46116, NSN 8010-01-035-3356
39. Rubber Gloves, Industrial, FED SPEC ZZ-G-381
40. Sealer, Nonhardening, Permatex No. 2

40.1. Sealant, Ultra Blue 587

40.2. Sealing Compound (05972), Loctite 242 (80244), MIL-S-46163A, Type 2, Grade N, NSN 8030-01-014-5869

41. Sealing Lubricating and Wicking Compounds: Thread-Locking, Anaerobic, Single-Component, MIL-S-46163, NSN 8030-00-148-9833
42. Soap, NSN 8520-00-634-0335
43. Tape, Cloth, Pressure Sensitive (Duct Tape), NSN 7510-00-890-9874
44. Tape, Insulating, Electrical Pressure Sensitive Adhesive and Pressure Sensitive Thermosetting Adhesive, MIL-I-15126, NSN 5970-00-419-3164
45. Tape, Thread Sealing, Teflon
46. VCI-326 (44695)
47. VCI-329 (44695)
48. VCI-386 (44695)

APPENDIX C

LIST OF ABBREVIATIONS

C-1 LIST OF ABBREVIATIONS. The following abbreviations are used in this DMM.

3-CCP	3-Color Camouflage Pattern
ac	alternating current
ANSI	American National Standards Institute
assy	assembly
bat	battery
brg	bearing
brkt	bracket
°c	degrees Celsius
CARC	Chemical Agent Resistant Coating
cm	centimeter(s)
CONT	continued
c^3	cubic meter(s)
DCA	diagnostic connector access
DMM	Depot Maintenance Manual
DOD	Department of Defense
E.P.A.	Environmental Protection Agency
etc.	et cetera
°F	degrees Fahrenheit
FED SPEC	Federal Specification
ft	feet, foot
ft^3	cubic feet
ft-lb	foot-pound(s)
GS	General Schedule
HMEI	Heavy Mobile Equipment Inspector
HMEM	Heavy Mobile Equipment Mechanic

LIST OF ABBREVIATIONS-CONT

hp	horsepower
hsg	housing
hyd	hydraulic
Hz	hertz
ID	identification
in	inch(es)
Inc.	incorporated
IROAN	Inspect Repair Only As Necessary
ISO	International Organization for Standardization
kg	kilogram(s)
km	Kilometer(s)
kPa	kilopascal(s)
L	liter(s)
lb	pound(s)
LI	Lubrication Instruction
LVS	Logistics Vehicle System
m	meter(s)
MCO	Marine Corps Order
MI	Modification Instruction
MIL	Military Specification
MIL-HDBK	Military Handbook
MIL-STD	Military Standard
mm	millimeter
Mod	modification
mtg	mounting
N/A	not applicable

LIST OF ABBREVIATIONS-CONT

neg	negative
N.m	Newton Meter
No.	number
NSN	National Stock Number
OSHA	Occupational Safety and Health Act
oz	ounce(s)
pos	positive
pt	pint(s)
PTO	power take-off
RFD/W	Request for Deviation/Waiver
rpm	revolutions per minute
psi	pounds per square inch
qt	quart
qty	quantity
RS	Rebuild Standard
SL	Stock List
STE/ICE	Simplified Test Equipment for Internal Combustion Engines
TB	Technical Bulletin
Tech	Technical
TI	Technical Instruction
TM	Technical Manual
TM/DMM	Technical Manual/Depot Maintenance Manual
TO	Technical Order
V	volt
WG	Wage Grade

LIST OF ABBREVIATIONS-CONT

-	minus
+	plus
@	at

APPENDIX D

IROAN PROCEDURES

POWER UNIT, FRONT, 12-1/2 TON, 4X4, MK48, MOD 0

Section I. GENERAL INFORMATION

D-1. PURPOSE. To provide an Inspect Repair Only As Necessary (IROAN) standard for limited depot overhaul of the Power Unit, Front, 12-1/2 Ton, 4x4, MK48, Mod 0 which is less than depot overhaul, but will provide a mechanically reliable vehicle. IROAN shall be defined as that maintenance technique which determines the minimum repairs necessary to restore equipment, components, or assemblies to prescribed maintenance serviceability standards by utilizing all available diagnostic equipment and test procedures while minimizing disassembly and parts replacement.

D-2. SCOPE. The standards prescribed by these procedures will be used at the depot maintenance level for the MK48.

D-3. WAIVERS. When any work segment in this DMM cannot be accomplished as specified, immediately obtain prior approval of the procuring activity to deviate by submitting a request for deviation/waiver (RFD/W) as instructed in MIL-STD-480. Contractors will submit a RFD/W to the contracting officer.

D-4. PRE-SHOP ANALYSIS AND DEGREE OF DISASSEMBLY

a. Perform a pre-shop analysis of every MK48 to be IROAN repaired under the provisions of this standard using the references and criteria given in Paragraph 2-1f, Pre-Repair Inspection Requirements. Use the best available depot diagnostic, inspection, and testing techniques to determine the extent of work and parts required. Disassemble the MK48 and its assemblies to the extent necessary to determine if components meet the requirements specified in this DMM and in the work authorization document.

b. To the fullest extent possible, use test equipment to determine if assemblies and subassemblies meet prescribed reliability, performance, and work requirements. Unnecessary disassembly or removal of assemblies and subassemblies from the MK48 will not be accomplished. If conformance to the work standard cannot be certified by using existing inspection and testing and available diagnostic equipment, remove, disassemble, inspect, test, repair or overhaul the assembly to the degree necessary to ensure full conformance with this bulletin.

D-5. GENERAL CLEANING. Vehicles will be steam cleaned thoroughly before repair, paying particular attention to axle assemblies and areas underneath the body. Support cleaning operations will be accomplished as required. Wheels and tires will not be disassembled for cleaning purposes only. Refer to Rebuild Standard (RS) 08780A-50, Section III.

D-6. PREPARATION FOR SHIPMENT AND/OR STORAGE. Prepare the completed MK48 for shipment and/or storage according to the applicable equipment packaging data sheet as cited in the work authorization document.

D-7. OIL SEAL AND GASKET LEAKAGE. Evidence of lubricating or hydraulic oils passing through or around a seal is in itself not a defect; however, consideration shall be given to the fluid capacity in the item being checked/inspected. Use the following in determining the degree of oil loss:

a. Class

(1) Class I. Seepage of fluid (as indicated by wetness or discoloration) not great enough to form drops.

(2) Class II. Leakage of fluid great enough to form drops, but not enough to cause drops to fall from the item being checked/inspected.

(3) Class III. Leakage of fluid great enough to form drops that fall from the item being checked/inspected.

b. A class I or II leak, except in the fuel system and brake system, is an acceptable condition at any time and does not require corrective action.

c. A class III leak is unacceptable at any time and shall be corrected.

d. Inspection

(1) Inspection shall normally be performed during and immediately following an operational test, but not of sufficient duration to allow the fluids to return to ambient temperature.

(2) Observation of fluid leaks under a vehicle while performing a walk around inspection immediately after road test does not make the equipment defective. This leakage is an indication that further investigation is required to determine location and cause. The important thing to remember is the fluid capacity and the criticality of the component in question. If the inspector is in doubt, he should request assistance from his immediate supervisor.

(3) When equipment is standing idle (not energized) and the component is at ambient temperature, any drop that falls, oil or hydraulic fluid, will be classified as a major defect.

Section II. REPAIR PROCEDURES

D-8. AIR CLEANER ASSEMBLY. Replace element in air cleaner assembly. Ensure proper seal on induction tube and on air connections. Air cleaner assembly shall be free of cracks, breaks, or damage that restricts the free flow of air.

D-9. AXLE ASSEMBLIES. Axle assemblies shall operate without evidence of unusual noise, vibration, or overheating. If any or all of these conditions exist, locate source of problem and repair or replace components as necessary to eliminate problem.

b. A Class I leak with unit at operating temperature is acceptable.

(1) Drain lubricant after tests are completed.

(2) Evidence of metal chips or particles in the lubricant is not acceptable. If metal chips are found in lubricant, examine internal parts of axle assembly more closely to determine source of metal chips. Repair or replace component(s) causing problem.

(3) Rust or corrosion is not acceptable on interior components. If rust or corrosion exists on interior components, remove rust or corrosion. Replace component if condition is extensive and has damaged component beyond repair.

(4) Outer surfaces shall be free of rust or other damage which may impair the oil seal. Ensure outer surfaces are free of rust or damage.

(5) Remove breathers from each axle and wash in solvent conforming to FED SPEC P-D-680 and allow to air dry.

c. Axles shall meet applicable Technical Manual/Depot Maintenance Manual (TM/DMM) performance requirements or pertinent contractual obligations.

(1) Remove inspection plates from axles and check gear teeth for wear, flaking, and pitting. Repair or replace worn, flaking, or pitted gear teeth.

(2) Check differential back lash as outlined in TM 2320-34/13. Set differential back-lash if not as prescribed in TM 2320-34/13.

(3) Install new gaskets and seals as required. Do not use old gaskets and seals.

D-10. DIFFERENTIALS. Refer to Paragraph D-9. Differentials shall meet applicable TM/DMM performance requirements or pertinent contractual obligation.

D-11. BATTERIES. For repair and return to the user programs, the following requirements will be met:

a. Batteries will be checked and serviced in accordance with TM 9-6140-200-14.

b. Batteries must accept charge.

c. Ensure electrolyte is at proper level with minimum specific gravity (1.225) as applicable to the battery.

d. Activation date shall be stamped and be within previous nine months of vehicle reconditioning. For vehicles repaired or overhauled and turned into depot supply/storage, existing regulations governing batteries will prevail.

D-12. BRAKE SYSTEM. The service brakes and the parking brakes are solely operated by air. The brake system shall be disassembled, inspected, and repaired. Completely inspect the operational components of the air brake system to ensure reliability.

a. Service Brakes. Overhaul service brakes 100 percent.

(1) Service brake shoes, linings, and drums shall conform to standards outlined in TM 2320-20/12 and TM 2320-34/13.

(2) Service brake parts shall be properly mounted and free of bends and distortion.

(3) Remove and repair air brake chamber assemblies.

(4) Remove and repair spider assemblies.

(5) Check brake linings for evidence of grease or oil.

(6) Check thickness of brake linings. Replace brake linings with less than 1/4 inch (1.59 mm) of thickness remaining.

(7) Replace grease- or oil-soaked brake linings or warped brake shoes.

(8) Inspect brake drums for scoring. Scoring is not to exceed 10 percent of the braking surface.

(a) Brake drums will not be cracked or distorted. Replace cracked or distorted brake drums.

(b) Minor heat checks which do not extend to outer edge of brake drum are acceptable.

(c) Measure inside diameter of brake drum at three equally spaced points. If measurement at any point exceeds 17.085 in (43.39 cm) on front drum or 16.614 in (42.2 cm) on rear drum (axles 2, 3, or 4), replace brake drum.

(d) Refinished brake drums which are machined to maximum allowable diameter are acceptable if remaining scores do not exceed 1/32 inch.

(e) Runout will not exceed .025 inch.

(f) Runout after resurfacing will not exceed .006 inch (maximum).

(g) Stamp oversize brake drums on outer face of brake drum just above and between two studs on finished brake drums.

(h) Brake drums shall be matched per axle and will be checked and serviced according to TM 2320-20/12 and TM 2320-34/13.

(9) Use new brake shoe and lining assemblies on both ends of the same axle.

(10) Replace damaged or defective brake lines.

(11) Brake lines will be of correct diameter and length and free of kinks or flat sections. Replace kinked or flattened brake lines.

(12) Fittings and nuts will not be distorted to the extent that they cannot be properly tightened. Replace distorted fittings and nuts.

(13) Replace bearings and races which indicate overheating, galling, flaking, or other damage.

(14) Check each input and output shaft seal for damage and leaks. Replace damaged seals and repair leaks.

(15) Inspect wheel bearing cones and cups for scoring, pitting, and discoloration. Replace scored, pitted, or discolored wheel bearing cones and cups.

(16) Replace oil seals 100 percent.

b. Air Brake Chamber. Inside of brake chamber will be free of mud, water, or other debris. If any is found, remove the air brake chamber and repair according to RS 08780A-50.

c. Parking Brakes

(1) The parking brake valve shall operate freely.

(2) The parking brakes shall operate properly.

(3) The parking brakes shall hold vehicle when parking brake is applied. If vehicle is on a steep slope, use parking brakes and chock wheels to prevent vehicle from rolling.

D-13. CAB ASSEMBLY

a. Cab assembly shall be free of breaks, cracks, missing, or damaged hardware.

b. Doors, closures, and associated hardware shall function as intended.

c. Indentations of no more than 1/2 inch are acceptable.

d. Misalignment of doors is permissible provided they latch tightly and operate freely.

e. Dents, sags, and bulges in the floor that do not exceed 7/16 inch are acceptable.

D-14. COOLING SYSTEM

a. Removal of radiators from the vehicle for test and repairs is optional.

b. Replace deteriorated, weather checked, or damaged cooling system hoses.

c. Cooling systems will be flushed 100 percent and will be free of leaks.

d. Cooling fins will be examined and straightened if not open for proper air circulation.

e. The cooling system will be capable of maintaining proper temperature during engine operation.

f. Water pump shafts and bearings shall be free of obvious wear. Water pump shaft tolerance shall be in accordance with the applicable TM/DMM.

g. The cooling system shall be properly tagged, indicating type of coolant installed.

h. The radiator must maintain specified pressure.

i. Radiators shall be serviced in accordance with TM 750-254.

j. New thermostats shall be installed.

D-15. CUSHIONS, SEAT PADS, CUSHION-LIKE PARTS, SEAT BACKS, AND FRAMES

a. Cushions, seat pads, cushion-like parts, and seat backs shall be free of ripped, torn, or deteriorated coverings and free of sagged or broken springs. Mismatch of color shades is acceptable.

b. Frames shall be in good condition.

D-16. DATA PLATES AND PLACARDS. All required data plates and placards shall be in place and shall be legible. Refer to Figure D-1 for IROAN overhaul data plate.

VEHICLE SERIAL NO. _____ OVERHAULED IN ACCORDANCE WITH INSPECT AND REPAIR ONLY AS NECESSARY SPECIFICATIONS CONTAINED IN RS 08780A-50

DMA: _____ DATE: _____

Figure D-1. IROAN Overhaul Data Plate

D-17. ELECTRICAL SYSTEM

a. Functionally test the entire electrical system. All lights shall function properly. Repair or replace lights that are not functioning properly.

b. Ensure that cables, wiring, and harnesses are installed properly and replace those that are damaged beyond repair. Minor weather checking is acceptable provided it does not extend to the core of the wire.

c. Minor discoloration, scratches, or corrosion on lenses is acceptable provided it does not reduce visibility of lights or reflectors. Replace lenses that are discolored, scratched, or damaged beyond acceptable limits.

D-18. ELECTRIC MOTORS (STARTER AND ALTERNATOR)

a. Perform operational test to confirm that performance and function meet applicable standards and requirements.

b. Electric motors shall be properly installed and securely mounted. Defective electric motors will be repaired or replaced as necessary.

D-19. TRAILER CONNECTOR COUPLING

a. Trailer connector coupling shall be intact and function properly. Repair or replace trailer connector coupling broken or damaged beyond acceptable limits.

b. Weather checking of hoses is acceptable providing it does not extend to the hose core. Replace hoses that are weather checked to the hose core.

c. Intervehicular electrical cables shall be free of opens or shorts. Locate and repair any opens or shorts as necessary.

d. Insulation and rubber jackets shall be free of cuts and breaks. Repair or replace insulation and rubber jackets that are cut or broken. Minor weather checking is acceptable.

D-20. ENGINE

a. An engine which meets the performance requirements during the pre-shop road test and chassis dynamometer test (or equivalent) shall not be subjected to cylinder compression test.

b. Oil pressure shall be in accordance with applicable TM/DMM.

c. Engine shall evidence no unusual noise or vibration.

d. A Class I oil leak is allowable with the engine running at normal operating temperature.

e. Perform oil analysis in accordance with TI 4731-14/1.

f. An engine which does not meet the above requirements shall be repaired or overhauled.

g. An engine which will be overhauled to meet the IROAN procedures shall be overhauled in accordance with the applicable TM/DMM.

D-21. GOVERNOR

a. The engine will maintain RPM's within limits prescribed in applicable TM/DMM requirements or pertinent contractual obligations.

b. The governor shall be capable of stabilizing the engine within 3 seconds after full throttle operation is reached.

c. The governor housing shall be sealed properly.

D-22. FUEL SYSTEM

a. The fuel system shall be free of contamination, rust, and leaks.

b. Replaced deteriorated, weather checked, or damaged fuel lines and hoses.

c. Install new fuel filter elements.

d. The fuel quantity sending unit and indicator shall function properly.

e. The fuel pumps shall operate properly at pressures as prescribed in the applicable TM/DMM.

D-23. INJECTORS AND NOZZLES. Injectors and nozzles shall operate within limits prescribed in the applicable TM/DMM.

D-24. ACCESSORY DRIVE BELTS. All accessory drive belts shall be replaced with new belts at the time of IROAN.

D-25. EXHAUST SYSTEM

a. Exhaust system shall be free of exhaust leaks, cracks, and holes (other than drain).

b. Mounting and connections shall be secure.

D-26. TRANSMISSION

a. A transmission which does not meet the performance requirements during the pre-shop road test will be repaired or overhauled.

b. Under operating conditions, the transmission will be free from vibration and unusual noises.

c. A Class I leak immediately after road test is acceptable.

d. Metal chips or particles in the lubricant are not acceptable and evidence of same will be cause for complete disassembly, inspection, repair, or overhaul in accordance with applicable TM/DMM requirements or pertinent contractual obligations.

D-27. TRANSFER CASE AND POWER TAKE-OFF (PTO)

a. The transfer case and PTO will meet applicable TM/DMM performance requirements or pertinent contractual obligations and function properly in all gear positions with no indication of overheating.

b. Under operating conditions, the transfer case and PTO shall be free of vibration or unusual noises.

c. A Class I leak immediately after road test is acceptable.

d. Metal chips or particles in the lubricant are not acceptable and evidence of same will be cause for complete disassembly, inspection, repair, or overhaul as required in accordance with the applicable TM/DMM requirements or pertinent contractual obligations.

D-28. GASKETS AND SEALS. All gaskets and seals will be replaced on assemblies that have been disassembled.

D-29. UNIVERSAL JOINTS. Universal joints, sliding couplings, universal joint bearings, center bearings, and pillow blocks will not show lost rotary motion when rotated or manipulated by hand.

D-30. FRAME

a. Repair or replace broken crossmembers, repair broken welds by welding, tighten loose bolts, and replace broken or missing bolts. If necessary, remove frame panels or parts for inspection. Refer to TM 9-237 for welding repair and TB 9-2300-247-40 for frame repair.

NOTE

Look for bubbling or discolored paint which indicates rusting from the inside. Pay particular attention to areas where dirt may collect.

b. Sheet metal, frame rails, crossmembers, and mounting brackets shall be inspected for rusting or rust through condition. Refer to TM 4750-15/1 for repair of rusted components. For rust or corrosion conditions not covered in TM 4750-15/1, refer to TM 3080-50 and SB 740-98-1.

D-31. FENDERS. Fenders shall be free of breaks, cracks, or missing or damaged hardware. Indentations of no more than 1/4 inch are acceptable.

D-32. GLASS

a. All glass shall be free of cracks.

b. Minor discoloration not more than 1-1/2 inches from the edge and on the right side of the windshields is acceptable.

c. Scattered hairline scratches not within the driver's immediate vision are acceptable.

d. Mounting and frames shall be secure.

e. Seals shall be weather tight when this is the intended function.

f. Slight weather checking on rubber seals is acceptable.

D-33. MIRRORS

a. Mirrors shall be free of cracks or breaks.

b. Minor scratches are acceptable.

c. Mountings shall be secure.

d. Adjustment features shall function properly.

e. Mismatch of mirrors, vehicle to vehicle, is acceptable.

f. Individual vehicles shall have like mirrors on both sides.

D-34. WEATHER STRIPPING AND DUST SEALS

a. Weather stripping and dust seals shall serve the purpose intended.

b. Weather checking is acceptable.

D-35. HYDRAULIC SYSTEM

a. Hydraulic pump, power steering pump, etc., shall operate as intended.

b. Fill hydraulic system reservoir to proper level with prescribed fluid.

c. Hoses shall be in good serviceable condition. Slight weather checking is acceptable.

d. The hydraulic system shall be free of leaks at maximum operating pressure and operate properly.

e. Hydraulic reservoirs and tanks shall be free from contamination and leaks.

D-36. INSTRUMENTS AND GAUGES. Instruments and gauges shall function properly and indicate accurately. Repair or replace damaged or inoperative instruments and gauges.

D-37. STEERING ASSEMBLIES

a. Steering assemblies shall evidence no damaged or defective parts.

b. Steering assemblies shall be in adjustment in accordance with pertinent TM/DMM and perform to applicable requirements or pertinent contractual obligations.

c. Steering assemblies shall provide positive control of vehicle and will be free of binding or lost motion in the steering wheel.

d. Steering gear housing shall be free of leaks.

e. Align front wheels in accordance with pertinent TM/DMM.

NOTE

No welding or straightening (hot or cold) is permitted on steering gear controls.

Steering wheels with minor cracks, 1/8 inch wide or less, which do not extend to the steering wheel core may be repaired by filling with a non-shrinking epoxy and sanded smooth.

NOTE

Steering gear and complete steering system shall meet applicable TM/DMM performance requirements or pertinent contractual obligations.

D-38. POWER STEERING

a. Power steering on vehicles shall be free of leaks and loose connections.

b. Power steering reservoir shall be filled to proper level.

c. Power steering mechanism shall operate without binding or roughness on ball.

d. Bell crank pin and bushing are acceptable if play at extreme end of arm does not exceed 1/4 inch.

D-39. SUSPENSION SYSTEM

a. Spring assemblies shall be free of cracked or broken leaves, chips, broken center bolts, and loose or damaged U-bolts. Replace cracked or broken spring assembly components as necessary.

b. Align spring leaf ends to within 1/4 inch (6.35 mm).

c. Springs will not be permanently set.

(1) Wear on spring saddle side thrust plates will not exceed 1/8 inch. Replace spring saddle side thrust plates worn excessively.

(2) Check for metal to metal contact between spring seat and spring seat cap or between spring seat and inner retainer on rear suspension. Metal to metal contact indicates a worn or damaged trunnion bushing. Replace worn or damaged trunnion bushings.

d. Repair bearing plates which are worn to the extent that the spring leaf rides on the guide bracket.

e. Torque rods shall be free of damage and looseness. Replace torque rods damaged or worn beyond repair.

f. Torque rod mounting brackets shall be free of cracks, breaks, and mounting shall be sure on frame. Repair cracks and breaks by welding. Refer to TM 9-237.

D-40. TORQUE RODS

a. Separation of rubber from metal parts on torque rods is acceptable if it does not exceed 3/8 inch.

b. Rubber shall be resilient.

D-41. WHEELS

a. Wheels, wheel rings, and clamp plates shall be free of cracks, dents, breaks, and damaged mounting holes. Replace wheels not meeting these requirements.

b. Align wheels and axles on MK48. Wheel and axle alignment shall meet the standards prescribed in applicable TM/DMM.

D-42. TIRES

NOTE

Refer to TM 9-2610-200-24, TM 9-2610-200-34, and TM 9-2610-201-14 for inspection, care, and maintenance of tires.

Three separate measurements shall be taken to determine overall tread wear. Measure tread depth at outside edge, center, and inside edge at approximately the 4, 8, and 12 o'clock positions around outside of tire.

a. Each tire shall have 3/32 of an inch (2.38 mm) or more of tread remaining in good, serviceable condition. Replace tires with less than 3/32 of an inch (2.38 mm) tread.

b. Match all tires on a vehicle to provide proper performance and approximately equal tire life.

c. Tires shall not show evidence of cupping or chunking. Replace tires showing such cupping or chunking.

d. Tires shall not have cuts or cracks greater than one inch in length or 1/8 of an inch wide. Replace tires not meeting these standards.

e. Tires shall not have cuts or breaks, regardless of length or width, which extend to the fabric. Replace tires broken or cut to the fabric.

f. Rubber separation or bulges on tire sidewalls are not acceptable. Replace tires in such condition.

D-43. SPECIAL PURPOSE KITS. Installed special purpose kits, such as personnel heater kits, power plant heater kits, deep-water fording kits, etc., shall be repaired as required using applicable TM/DMM.

NOTE

Work directives may require removal of special purpose kit(s).

D-44. LUBRICATION. Lubricate MK48 according to Lubrication Instruction (LI 2320-12/9). The use of drained oil is prohibited.

D-45. PAINT (INTERIOR/EXTERIOR)

a. Clean and paint all non-Chemical Agent Resistant Coating (CARC) painted vehicles according to TM 4750-15/1, Chapter 2, using polyurethane paint MIL-C-46168 or MIL-C-53039 with United States and Europe Verdant 3-Color Camouflage Pattern (3-CCP) or as specified in the pertinent work order or contract. Refer to Table 3-2 of TM 4750-15/1 for color and to TM 4750-15/2 for drawing number.

b. Touch up all MK48's that are painted with CARC and have 3-CCP according to TM 4750-15/1.

D-46. RUSTPROOFING. Vehicles shall be rustproofed according to TB 43-0213.

INDEX

Item	Paragraph No.	Page No.
A		
Access Covers		
Removal	2-75	2-149
Repair and Replacement	2-230	2-414
Reassembly and Installation	2-386	2-582
Accessory Drive Belts	D-24	D-8
Accumulator		
Removal	2-112	2-205
Repair and Replacement	2-267	2-447
Reassembly and Installation	2-349	2-562.1
Accumulator (LVSA1 Series Vehicles Only)		
Removal	2-112.1	2-206.1
Repair and Replacement	2-267.1	2-448.1
Reassembly and Installation	2-349.1	2-563
Adjustments	2-460	2-633
Air Cleaner Assembly		
Removal	2-31	2-79
Repair and Replacement	2-185	2-362.2
Reassembly and Installation	2-430	2-609
Air Cleaner Assembly (IROAN)	D-8	D-3
Air Horns		
Removal	2-68	2-142
Repair and Replacement	2-222	2-407
Reassembly and Installation	2-393	2-586

INDEX-CONT

Item	Paragraph No.	Page No.
A-CONT		
Air Cleaner Intake Ducting		
Removal	2-32	2-79
Repair and Replacement	2-186	2-366.3
Reassembly and Installation	2-429	2-609

INDEX-CONT

Item	Paragraph No.	Page No.
A-CONT		
Air Horn Chain and Control Valve		
Removal	2-72	2-147
Repair and Replacement	2-227	2-411
Reassembly and Installation	2-389	2-584
Air Lines and Fittings		
Removal	2-14	2-41
Repair and Replacement	2-168	2-326
Reassembly and Installation	2-447	2-622
Air Restriction Indicator		
Removal	2-92	2-176
Repair and Replacement	2-247	2-425
Reassembly and Installation	2-369	2-573
Alignments	2-459	2-633
Alternator Diode and Circuit Breaker		
Removal	2-33	2-82
Repair and Replacement	2-187	2-367
Reassembly and Installation	2-428	2-608
Articulation Joint		
Removal	2-128	2-234
Repair and Replacement	2-283	2-473
Reassembly and Installation	2-333	2-553
Axle Assemblies (IROAN)	D-9	D-3

INDEX-CONT

Item	Paragraph No.	Page No.
A-CONT		
Axle Assembly No. 1		
Removal	2-131	2-240
Repair and Replacement	2-286	2-474
Reassembly and Installation	2-330	2-543
Axle Assembly No. 2		
Removal	2-132	2-254
Repair and Replacement	2-287	2-489
Reassembly and Installation	2-329	2-539
B		
Ball Valve		
Removal	2-142	2-278
Repair and Replacement	2-297	2-515
Reassembly and Installation	2-319	2-531
Batteries (IROAN)	D-11	D-3
Battery Cable, Batteries, and Battery Box		
Removal	2-3	2-17
Repair and Replacement	2-157	2-304
Reassembly and Installation	2-458	2-630.2
Battery Cables, Batteries, and Battery Box (LVSA1 Series Vehicles Only)		
Removal	2-3.1	2-18.1
Repair and Replacement		
Reassembly and Installation	2-457.2	2-630.1

INDEX-CONT

Item	Paragraph No.	Page No.
B-CONT		
Beacon Light and Mounting Bracket		
Removal	2-7	2-26
Repair and Replacement	2-161	2-309
Reassembly and Installation	2-454	2-628

INDEX-CONT

Item	Paragraph No.	Page No.
B-CONT		
Bell Crank		
Removal	2-126	2-232
Repair and Replacement	2-281	2-472
Reassembly and Installation	2-335	2-554
Brake Treadle Valve		
Removal	2-49	2-109
Repair and Replacement	2-203	2-389
Reassembly and Installation	2-412	2-597
Brake System (IROAN)	D-12	D-4
Building and Hardstand Facilities	1-16	1-14
C		
Cab		
Removal	2-62	2-131
Repair and Replacement	2-216	2-402
Reassembly and Installation	2-399	2-588
Cab Assembly (IROAN)	D-13	D-5
Cab Steps		
Removal	2-57	2-125
Repair and Replacement	2-211	2-397
Reassembly and Installation	2-404	2-592
Cab Windows		
Removal	2-106	2-196
Repair and Replacement	2-261	2-441
Reassembly and Installation	2-355	2-565

INDEX-CONT

Item	Paragraph No.	Page No.
C-CONT		
Cab Wiring Harness		
Removal	2-108	2-202
Repair and Replacement	2-263	2-443
Reassembly and Installation	2-353	2-565
Cab 90° Gear Box		
Removal	2-46	2-105
Repair and Replacement	2-200	2-387
Reassembly and Installation	2-415	2-599
Cardan Joint		
Removal	2-119	2-217
Repair and Replacement	2-274	2-461
Reassembly and Installation	2-342	2-559
Chassis Wiring Harness		
Removal	2-150	2-293
Repair and Replacement	2-305	2-522
Reassembly and Installation	2-311	2-526
Check Valves		
Removal	2-144	2-284
Repair and Replacement	2-299	2-518
Reassembly and Installation	2-317	2-530
Circuit Breakers		
Removal	2-80	2-158
Repair and Replacement	2-235	2-417
Reassembly and Installation	2-381	2-580
Cleaning	2-153	2-296

INDEX-CONT

Item	Paragraph No.	Page No.
C-CONT		
Clearance Light Mounting Bracket and Clearance Lights		
Removal	2-55	2-120
Repair and Replacement	2-209	2-395
Reassembly and Installation	2-406	2-593
Coating	2-154	2-301
Composite Lights		
Removal	2-54	2-120
Repair and Replacement	2-208	2-394
Reassembly and Installation	2-407	2-594
Coolant Filter and Adapter		
Removal	2-114	2-206.3
Repair and Replacement	2-269	2-452
Reassembly and Installation	2-347	2-562
Cooling System Hoses and Tubes		
Removal	2-21	2-56
Repair and Replacement	2-175	2-336
Reassembly and Installation	2-440	2-616
Cooling System (IROAN)	D-14	D-5
Cushions, Seat Pads, Cushion-Like Parts, Seat Backs, and Frames (IROAN)	D-15	D-6
D		
Data Plates and Placards		
Removal	2-151	2-295
Repair and Replacement	2-306	2-523
Reassembly and Installation	2-310	2-525

INDEX-CONT

Item	Paragraph No.	Page No.
D-CONT		
Data Plates and Placards (IROAN)	D-16	D-6
Data Plates and Placards-Stamping Description, and Location	1-6	1-4
Defroster Ducts		
Removal	2-103	2-192
Repair and Replacement	2-258	2-437
Reassembly and Installation	2-358	2-567
Demand Valve		
Removal	2-137	2-273
Repair and Replacement	2-292	2-508
Reassembly and Installation	2-324	2-535
DESCRIPTION	N/A	1-3
Differentials (IROAN)	D-10	D-3
Directional Relief Valve		
Removal	2-38	2-93
Repair and Replacement	2-192	2-375
Reassembly and Installation	2-423	2-604
Dome Light		
Removal	2-84	2-164
Repair and Replacement	2-239	2-419
Reassembly and Installation	2-377	2-579
Door and Mirror Bracket		
Removal	2-71	2-142
Repair and Replacement	2-225	2-410
Reassembly and Installation	2-390	2-585

INDEX-CONT

Item	Paragraph No.	Page No.
D-CONT		
Drag Links		
Removal	2-122	2-226
Repair and Replacement	2-277	2-462
Reassembly and Installation	2-339	2-556
Drive Line Lockup Switch		
Removal	2-91	2-174
Repair and Replacement	2-246	2-424
Reassembly and Installation	2-370	2-573
E		
Electric Motors (Starter and Alternator)	D-18	D-7
Electric Horns		
Removal	2-69	2-142
Repair and Replacement	2-223	2-409
Reassembly and Installation	2-392	2-585
Electrical System (IROAN)	D-17	D-6
Engine Cover, Radiator Grate, and Radiator Grille		
Removal	2-17	2-45
Repair and Replacement	2-171	2-329
Reassembly and Installation	2-444	2-620
Engine (IROAN)	D-20	D-7
Environmental Precautions	1-20	1-15
Estimated Man-Hour Requirements	1-14	1-12

INDEX-CONT

Item	Paragraph No.	Page No.
E-CONT		
Ether Bottle, Air Dryer, and Air Dryer Mounting Bracket		
Removal	2-35	2-85
Repair and Replacement	2-189	2-369
Reassembly and Installation	2-426	2-606
Ether Start Switch		
Removal	2-90	2-174
Repair and Replacement	2-245	2-424
Reassembly and Installation	2-371	2-574
Exhaust Pipe and Muffler Assembly		
Removal	2-8	2-26
Repair and Replacement	2-162	2-312
Reassembly and Installation	2-453	2-627
Exhaust System (IROAN)	D-25	D-8
Exterior Access Panels		
Removal	2-6	2-26
Repair and Replacement	2-160	2-309
Reassembly and Installation	2-455	2-628
F		
Fan Control Relief/Unload Valve		
Removal	2-113	2-207
Repair and Replacement	2-268	2-449
Reassembly and Installation	2-348	2-563

INDEX-CONT

Item	Paragraph No.	Page No.
F-CONT		
Fan Motor and Fan		
Removal	2-27	2-72
Repair and Replacement	2-181	2-356
Reassembly and Installation	2-434	2-611
Fan Mount/Radiator Support		
Removal	2-26	2-69
Repair and Replacement	2-180	2-355
Reassembly and Installation	2-435	2-612
Fenders (IROAN)	D-31	D-9
Final Inspection	1-9	1-12
Frame Assembly		
Removal	2-152	2-295
Repair and Replacement	2-307	2-523
Reassembly and Installation	2-309	2-525
Frame (IROAN)	D-30	D-9
Frame 90° Gear Box		
Removal	2-70	2-142
Repair and Replacement	2-224	2-410
Reassembly and Installation	2-391	2-585
Front Air Manifold		
Removal	2-140	2-275
Repair and Replacement	2-295	2-513
Reassembly and Installation	2-321	2-533

INDEX-CONT

Item	Paragraph No.	Page No.
F-CONT		
Fuel Filters, Hand Priming Pump, and Mounting Bracket		
Removal	2-10	2-29
Repair and Replacement	2-164	2-316
Reassembly and Installation	2-451	2-624
Fuel Lines, Vent Lines, Check Valves, and Fittings		
Removal	2-23	2-64
Repair and Replacement	2-177	2-342
Reassembly and Installation	2-438	2-614
Fuel System (IROAN)	D-22	D-8
Fuel Tanks		
Removal	2-24	2-64
Repair and Replacement	2-178	2-344
Reassembly and Installation	2-437	2-613
Functional Description	1-5	1-3
Fuse Link Assembly		
Removal	2-123	2-226
Repair and Replacement	2-278	2-464
Reassembly and Installation	2-338	2-556
G		
Gaskets and Seals	D-28	D-9
General Cleaning	D-5	D-1
General Requirements	1-15	1-14
General Requirements	1-8	1-12
General Information	2-1	2-1

INDEX-CONT

Item	Paragraph No.	Page No.
G-CONT		
GENERAL INFORMATION (IROAN)	N/A	D-1
GENERAL OVERHAUL REQUIREMENTS	N/A	2-1
Glad Hands		
Removal	2-141	2-278
Repair and Replacement	2-296	2-514
Reassembly and Installation	2-320	2-532
Glass (IROAN)	D-32	D-9
Governor (IROAN)	D-21	D-8
Grab Handle - Left Fender		
Removal	2-30	2-76
Repair and Replacement	2-184	2-362.1
Reassembly and Installation	2-431	2-610
Grab Handles - Cab		
Removal	2-64	2-137
Repair and Replacement	2-218	2-404
Reassembly and Installation	2-397	2-587
Grab Handle (LVSA1 Series Vehicles Only)		
Repair and Replacement	2-184.1	2-362.1
Grille, Skid Plate, and Skid Plate Frame		
Removal	2-5	2-21
Repair and Replacement	2-159	2-308
Reassembly and Installation	2-456	2-628
H		
Hand Control Valve		

INDEX-CONT

Item	Paragraph No.	Page No.
H-CONT		
Hand Control Valve-CONT		
Removal	2-95	2-182
Repair and Replacement	2-250	2-426
Reassembly and Installation	2-366	2-571

INDEX-CONT

Item	Paragraph No.	Page No.
H-CONT		
Headlight Dimmer Switch		
Removal	2-74	2-149
Repair and Replacement	2-229	2-413
Reassembly and Installation	2-387	2-583
Headlight Shields		
Removal	2-42	2-100
Repair and Replacement	2-196	2-380
Reassembly and Installation	2-419	2-601
Headlight Assembly		
Removal	2-53	2-117
Repair and Replacement	2-207	2-392
Reassembly and Installation	2-408	2-594
Heater Assembly		
Removal	2-101	2-188
Repair and Replacement	2-256	2-430
Reassembly and Installation	2-360	2-568
Heater Core and Heater Blower Assembly		
Removal	2-102	2-192
Repair and Replacement	2-257	2-431
Reassembly and Installation	2-359	2-567
Heater Control Valve Cable		
Removal	2-60	2-128
Repair and Replacement	2-214	2-400
Reassembly and Installation	2-401	2-590

INDEX-CONT

Item	Paragraph No.	Page No.
H-CONT		
Heater Hoses and Fittings		
Removal	2-61	2-131
Repair and Replacement	2-215	2-401
Reassembly and Installation	2-400	2-589
Hi-Pressure Hydraulic Filter and Head (LVSA1 Series Vehicles Only)		
Repair and Replacement	2-190.2	2-374
Hydraulic Hoses and Fittings		
Removal	2-18	2-49
Repair and Replacement	2-172	2-330
Reassembly and Installation	2-443	2-618
Hydraulic Oil Cooler		
Removal	2-19	2-54
Repair and Replacement	2-173	2-332
Reassembly and Installation	2-442	2-617
Hydraulic Oil Filter Housing and Oil Level Gauge		
Removal	2-36	2-87
Repair and Replacement	2-190	2-370
Reassembly and Installation	2-425	2-605
Hydraulic Oil Filter Housing and Oil Level Gauge (LVSA1 Series Vehicles Only)		
Repair and Replacement	2-190.1	2-372.2
Hydraulic Oil Reservoir		
Removal	2-37	2-91

INDEX-CONT

Item	Paragraph No.	Page No.
H-CONT		
Hydraulic Oil Reservoir-CONT		
Repair and Replacement	2-191	2-374
Reassembly and Installation	2-424	2-604
Hydraulic Pump		
Removal	2-110	2-202.2
Repair and Replacement	2-265	2-446
Reassembly and Installation	2-351	2-564

INDEX-CONT

Item	Paragraph No.	Page No.
H-CONT		
Hydraulic Pump Propeller Shaft		
Removal	2-109	2-202
Repair and Replacement	2-264	2-444
Reassembly and Installation	2-352	2-564
Hydraulic Steering Manifold		
Removal	2-138	2-273
Repair and Replacement	2-293	2-511
Reassembly and Installation	2-323	2-535
Hydraulic System (IROAN)	D-35	D-10
I		
Ignition Switch		
Removal	2-93	2-179
Repair and Replacement	2-248	2-425
Reassembly and Installation	2-368	2-572
Injectors and Nozzles (IROAN)	D-23	D-8
Inspection Facilities	1-17	1-14
Inspection	2-155	2-303
Instrument Panel Assembly		
Removal	2-86	2-168
Repair and Replacement	2-241	2-421
Reassembly and Installation	2-375	2-577
Instrument Panel Air Manifolds		
Removal	2-51	2-112
Repair and Replacement	2-205	2-389
Reassembly and Installation	2-410	2-595

INDEX-CONT

Item	Paragraph No.	Page No.
I-CONT		
Instruments and Gauges (IROAN)	D-36	D-10
IROAN PROCEDURES	N/A	D-1
J		
Not Used		
K		
Not Used		
L		
List of Abbreviations	C-1	C-1
List of Materials	B-1	B-1
Lockout Struts		
Removal	2-149	2-290
Repair and Replacement	2-304	2-521
Reassembly and Installation	2-312	2-526
Low Air Pressure Alarm		
Removal	2-87	2-168
Repair and Replacement	2-242	2-422
Reassembly and Installation	2-374	2-577
Low Air Pressure Switches		
Removal	2-48	2-109
Repair and Replacement	2-202	2-388
Reassembly and Installation	2-413	2-598
Lubrication, Painting, and Marking	2-461	2-641
Lubrication (IROAN)	D-44	D-12

INDEX-CONT

Item	Paragraph No.	Page No.
M		
Magnetic Switches		
Removal	2-81	2-161
Repair and Replacement	2-236	2-418
Reassembly and Installation	2-380	2-580
Main Air Manifold		
Removal	2-52	2-117
Repair and Replacement	2-206	2-391
Reassembly and Installation	2-409	2-594
Main Air Reservoirs		
Removal	2-29	2-76
Repair and Replacement	2-183	2-357
Reassembly and Installation	2-432	2-610
MAINTENANCE FACILITY REQUIREMENTS	N/A	1-14
Map Light		
Removal	2-85	2-164
Repair and Replacement	2-240	2-420
Reassembly and Installation	2-376	2-578
Master Light Switch		
Removal	2-98	2-185
Repair and Replacement	2-253	2-428
Reassembly and Installation	2-363	2-569
Mirror Assembly		
Removal	2-63	2-135
Repair and Replacement	2-217	2-403
Reassembly and Installation	2-398	2-588

INDEX-CONT

Item	Paragraph No.	Page No.
M-CONT		
Mirrors (IROAN)	D-33	D-9
Modifications	1-10	1-12
Motion Control Valve		
Removal	2-25	2-67
Repair and Replacement	2-179	2-350
Reassembly and Installation	2-436	2-613
N		
Not Used		
O		
Oil Seal and Gasket Leakage (IROAN)	D-7	D-1
Optic Ribbon Light Source		
Removal	2-77	2-154
Repair and Replacement	2-232	2-415
Reassembly and Installation	2-384	2-582
Optic Ribbons		
Removal	2-78	2-157
Repair and Replacement	2-233	2-416
Reassembly and Installation	2-383	2-581
Other Publications	A-2	A-1
Overhaul Requirements	1-4	1-1
P		
Paint (Interior/Exterior) (IROAN)	D-45	D-13

INDEX-CONT

Item	Paragraph No.	Page No.
P-CONT		
Parking Brake Valve		
Removal	2-89	2-171
Repair and Replacement	2-244	2-423
Reassembly and Installation	2-372	2-575
Pillow Block Assembly		
Removal	2-118	2-214
Repair and Replacement	2-273	2-458
Reassembly and Installation	2-343	2-560
Pitman Arm		
Removal	2-147	2-287
Repair and Replacement	2-302	2-520
Reassembly and Installation	2-314	2-527
Post Assembly Inspection	2-462	2-642
Power Steering Gear		
Removal	2-148	2-287
Repair and Replacement	2-303	2-521
Reassembly and Installation	2-313	2-527
Power Steering (IROAN)	D-38	D-11
Power Pack		
Removal	2-115	2-210
Repair and Replacement	2-270	2-453
Reassembly and Installation	2-346	2-562
Pre-shop Analysis and Degree of Disassembly (IROAN)	D-4	D-1
Preparation for Shipment and/or Storage (IROAN)	D-6	D-1

INDEX-CONT

Item	Paragraph No.	Page No.
P-CONT		
Pressure Protection Valve		
Removal	2-134	2-267
Repair and Replacement	2-289	2-504
Reassembly and Installation	2-327	2-537
Priority Fluid Control Valve		
Removal	2-136	2-270
Repair and Replacement	2-291	2-505
Reassembly and Installation	2-325	2-535
Propeller Shafts and Universal Joints		
Removal	2-120	2-218
Repair and Replacement	2-275	2-462
Reassembly and Installation	2-341	2-558
Propeller Shaft - Transmission to Transfer Case		
Removal	2-111	2-205
Repair and Replacement	2-266	2-447
Reassembly and Installation	2-350	2-564
Publication Index	A-1	A-1
Publications	1-11	1-12
Purpose	1-2	1-1
Purpose (IROAN)	D-1	D-1
Q		
Quality Assurance Provisions	1-3	1-1

INDEX-CONT

Item	Paragraph No.	Page No.
Q-CONT		
Quick Buildup Air Reservoir		
Removal	2-135	2-267
Repair and Replacement	2-290	2-504
Reassembly and Installation	2-326	2-536
Quick Disconnect Fitting		
Removal	2-28	2-72
Repair and Replacement	2-182	2-357
Reassembly and Installation	2-433	2-611
Quick Release Valve		
Removal	2-16	2-45
Repair and Replacement	2-170	2-328
Reassembly and Installation	2-445	2-621
R		
Radiator and Fan Shroud		
Removal	2-22	2-61
Repair and Replacement	2-176	2-337
Reassembly and Installation	2-439	2-615
Rear Air Manifold		
Removal	2-145	2-284
Repair and Replacement	2-300	2-519
Reassembly and Installation	2-316	2-529
Rear Window, Door Windows, and Peep Glass	2-226	2-411
Reassembly and Installation	2-308	2-525

INDEX-CONT

Item	Paragraph No.	Page No.
R-CONT		
Reflectors		
Removal	2-56	2-122
Repair and Replacement	2-210	2-396
Reassembly and Installation	2-405	2-592.1
Relay Valves		
Removal	2-143	2-281
Repair and Replacement	2-298	2-515
Reassembly and Installation	2-318	2-530
Relay Switches		
Removal	2-82	2-161
Repair and Replacement	2-237	2-418
Reassembly and Installation	2-379	2-580
Removal of Major Components	2-2	2-17
Repair and Replacement	2-156	2-304
REPAIR PROCEDURES (IROAN)	N/A	D-3
Required Test Equipment	1-13	1-12
Resistors		
Removal	2-83	2-161
Repair and Replacement	2-238	2-419
Reassembly and Installation	2-378	2-579
Road Test and Final Inspection	2-463	2-663
Roof Vent		
Removal	2-66	2-137
Repair and Replacement	2-220	2-405
Reassembly and Installation	2-395	2-587

INDEX-CONT

Item	Paragraph No.	Page No.
R-CONT		
Rubber Fenders - Cab		
Removal	2-65	2-137
Repair and Replacement	2-219	2-404
Reassembly and Installation	2-396	2-587
Rustproofing	D-46	D-13
S		
Safety Precautions	1-19	1-15
Scope	1-1	1-1
Scope (IROAN)	D-2	D-1
Seat Belts		
Removal	2-105	2-196
Repair and Replacement	2-260	2-440
Reassembly and Installation	2-357	2-566.1
Seat Belts (LVSA1 Series Vehicles Only)		
Removal	2-105.1	2-196
Repair and Replacement	2-260.1	2-440.1
Reassembly and Installation	2-357.1	2-567
Seat Frame Assembly		
Removal	2-104	2-192
Repair and Replacement	2-259	2-437
Reassembly and Installation	2-356	2-566
Shock Absorbers and Bushings		
Removal	2-129	2-234
Repair and Replacement	2-284	2-473
Reassembly and Installation	2-332	2-553

INDEX-CONT

Item	Paragraph No.	Page No.
S-CONT		
Slave Connector (LVSA1 Series Vehicles Only)		
Removal	2-3.2	2-19
Repair and Replacement		
Reassembly and Installation	2-457.1	2-630

INDEX-CONT

Item	Paragraph No.	Page No.
S-CONT		
Spare Tire and Wheel Assembly and Lifting Bracket		
Removal	2-11	2-37
Repair and Replacement	2-165	2-322
Reassembly and Installation	2-450	2-624
Spare Tire Hoist Winch		
Removal	2-12	2-37
Repair and Replacement	2-166	2-323
Reassembly and Installation	2-449	2-624
Spare Tire Hoist Winch Cable		
Removal	2-13	2-37
Repair and Replacement	2-167	2-325
Reassembly and Installation	2-448	2-623
Special Purpose Kits	D-43	D-12
Special Tools, Jigs, and Fixtures	1-12	1-12
Spring and Seat Assembly		
Removal	2-133	2-264
Repair and Replacement	2-288	2-501
Reassembly and Installation	2-328	2-538
Spring Brake Valve		
Removal	2-15	2-43
Repair and Replacement	2-169	2-327
Reassembly and Installation	2-446	2-621

INDEX-CONT

Item	Paragraph No.	Page No.
S-CONT		
Starter Relay		
Removal	2-34	2-82
Repair and Replacement	2-188	2-368
Reassembly and Installation	2-427	2-608
Steering Assemblies (IROAN)	D-37	D-10
Steering Column		
Removal	2-44	2-102.1
Repair and Replacement	2-198	2-383
Reassembly and Installation	2-417	2-600
Steering Relief Valve		
Removal	2-139	2-275
Repair and Replacement	2-294	2-512
Reassembly and Installation	2-322	2-534
Steering Selector Valve and Switch		
Removal	2-39	2-95
Repair and Replacement	2-193	2-377
Reassembly and Installation	2-422	2-603
Steering Shaft - Frame 90° Gear Box to Power Steering Gear		
Removal	2-146	2-287
Repair and Replacement	2-301	2-520
Reassembly and Installation	2-315	2-529

INDEX-CONT

Item	Paragraph No.	Page No.
S-CONT		
Steering Wheel		
Removal	2-41	2-97
Repair and Replacement	2-195	2-380
Reassembly and Installation	2-420	2-602
Stop Light Switches		
Removal	2-47	2-105
Repair and Replacement	2-201	2-388
Reassembly and Installation	2-414	2-599
Sun Visors		
Removal	2-73	2-149
Repair and Replacement	2-228	2-413
Reassembly and Installation	2-388	2-584
Support Shop Systems	1-18	1-14
Suspension System (IROAN)	D-39	D-11
T		
Technical Description	1-7	1-5
Throttle Treadle Valve		
Removal	2-50	2-112
Repair and Replacement	2-204	2-389
Reassembly and Installation	2-411	2-597
Tires (IROAN)	D-42	D-12
Toggle Switches		
Removal	2-79	2-158
Repair and Replacement	2-234	2-417
Reassembly and Installation	2-382	2-581

INDEX-CONT

Item	Paragraph No.	Page No.
T-CONT		
Torque Rods		
Removal	2-130	2-234
Repair and Replacement	2-285	2-473
Reassembly and Installation	2-331	2-551
Torque Rods (IROAN)	D-40	D-11
Trailer Air Supply Valve		
Removal	2-88	2-171
Repair and Replacement	2-243	2-422
Reassembly and Installation	2-373	2-576
Trailer Connector Coupling (IROAN)	D-19	D-7
Transfer Case		
Removal	2-121	2-218.1
Repair and Replacement	2-276	2-462
Reassembly and Installation	2-340	2-557
Transfer Case Shift Lever		
Removal	2-100	2-188
Repair and Replacement	2-255	2-430
Reassembly and Installation	2-361	2-568
Transfer Case and Power Take-Off (PTO)(IROAN)	D-27	D-8
Transfer Case Shift Cable		
Removal	2-59	2-128
Repair and Replacement	2-213	2-399
Reassembly and Installation	2-402	2-590

INDEX-CONT

Item	Paragraph No.	Page No.
T-CONT		
Transmission (IROAN)	D-26	D-8
Transmission Oil Cooler		
Removal	2-20	2-54
Repair and Replacement	2-174	2-334
Reassembly and Installation	2-441	2-617
Transmission Oil Filter, Adapter, and Mounting Bracket		
Removal	2-40	2-95
Repair and Replacement	2-194	2-378
Reassembly and Installation	2-421	2-602
Transmission Shift Cable		
Removal	2-58	2-125
Repair and Replacement	2-212	2-398
Reassembly and Installation	2-403	2-591
Transmission Shift Control		
Removal	2-99	2-188
Repair and Replacement	2-254	2-429
Reassembly and Installation	2-362	2-569
Turn Signal Switch and Flasher		
Removal	2-43	2-100
Repair and Replacement	2-197	2-381
Reassembly and Installation	2-418	2-600
Turn Signal Switch and Flasher (LVSA1 Series Vehicles Only)		
Removal	2-43.1	2-102
Repair and Replacement	2-197.1	2-383
Reassembly and Installation	2-418.1	2-601

INDEX-CONT

Item	Paragraph No.	Page No.
U		
Universal Joint and Steering Linkage		
Removal	2-45	2-105
Repair and Replacement	2-199	2-386
Reassembly and Installation	2-416	2-599
Universal Joint (IROAN)	D-29	D-9
V		
Vehicle Step, Splash Guards, and Fender Rubbers		
Removal	2-116	2-210
Repair and Replacement	2-271	2-453
Reassembly and Installation	2-345	2-561
W		
Waivers (IROAN)	D-3	D-1
Warning/Indicator Lights		
Removal	2-76	2-154
Repair and Replacement	2-231	2-415
Reassembly and Installation	2-385	2-582
Weather Stripping and Dust Seals (IROAN)	D-34	D-10
Wheels (IROAN)	D-41	D-12
Wheel and Tire Assembly		
Removal	2-4	2-19
Repair and Replacement	2-158	2-307
Reassembly and Installation	2-457	2-629

INDEX-CONT

Item	Paragraph No.	Page No.
W-CONT		
Wheel Chock Rack, Tool Stowage Box, and Fenders		
Removal	2-117	2-211
Repair and Replacement	2-272	2-456
Reassembly and Installation	2-344	2-560
Windshield Washer Control Valve		
Removal	2-97	2-184
Repair and Replacement	2-252	2-427
Reassembly and Installation	2-364	2-569
Windshield Washer Reservoir, Hoses, and Nozzles		
Removal	2-107	2-199
Repair and Replacement	2-262	2-441
Reassembly and Installation	2-354	2-565
Windshield Washer Reservoir, Hoses, and Nozzles (LVSA1 Series Vehicles Only)		
Removal	2-107.1	2-202
Repair and Replacement	N/A	N/A
Reassembly and Installation	2-354.1	2-~~565~~ 564.1
Windshield Wiper Arms and Wiper Blades		
Removal	2-67	2-137
Repair and Replacement	2-221	2-406
Reassembly and Installation	2-394	2-587
Windshield Wiper Control Valves		
Removal	2-96	2-182

INDEX-CONT

Item	Paragraph No.	Page No.
W-CONT		
Windshield Wiper Control Valves-CONT		
Repair and Replacement	2-251	2-427
Reassembly and Installation	2-365	2-570
Windshield Wiper Motors		
Removal	2-94	2-179
Repair and Replacement	2-249	2-426
Reassembly and Installation	2-367	2-571

INDEX-CONT

Item	Paragraph No.	Page No.
W-CONT		
Work Lights		
Removal	2-9	2-29
Repair and Replacement	2-163	2-314
Reassembly and Installation	2-452	2-626
X		
Not Used		
Y		
Yaw Control Valve		
Removal	2-124	2-229
Repair and Replacement	2-279	2-468
Reassembly and Installation	2-337	2-555
Yaw Feedback Linkage		
Removal	2-125	2-229
Repair and Replacement	2-280	2-468
Reassembly and Installation	2-336	2-555
Yaw Steering Cylinders		
Removal	2-127	2-232
Repair and Replacement	2-282	2-473
Reassembly and Installation	2-334	2-553
Z		
Not Used		